Manitowoc

Indigo™ Series

Air/Water/Remote Condenser Ice Machines

Technician's Handbook

Part Number 000014794 5/17

Safety Notices

Read these precautions to prevent personal injury:

- Read this manual thoroughly before operating, installing or performing maintenance on the equipment. Failure to follow instructions in this manual can cause property damage, injury or death.
- Routine adjustments and maintenance procedures outlined in this manual are not covered by the warranty.
- Proper installation, care and maintenance are essential for maximum performance and trouble-free operation of your equipment.
- Visit our website www.manitowocice.com for manual updates, translations, or contact information for service agents in your area.
- This equipment contains high voltage electricity and refrigerant charge. Installation and repairs are to be performed by properly trained technicians aware of the dangers of dealing with high voltage electricity and refrigerant under pressure. The technician must also be certified in proper refrigerant handling and servicing procedures. All lockout and tag out procedures must be followed when working on this equipment.
- This equipment is intended for indoor use only. Do not install or operate this equipment in outdoor areas.
- As you work on this equipment, be sure to pay close attention to the safety notices in this handbook. Disregarding the notices may lead to serious injury and/or damage to the equipment.

⚠ Warning

Follow these electrical requirements during installation of this equipment.

- All field wiring must conform to all applicable codes of the authority having jurisdiction. It is the responsibility of the end user to provide the disconnect means to satisfy local codes. Refer to rating plate for proper voltage.
- This appliance must be grounded.
- This equipment must be positioned so that the plug is accessible unless other means for disconnection from the power supply (e.g., circuit breaker or disconnect switch) is provided.
- Check all wiring connections, including factory terminals, before operation. Connections can become loose during shipment and installation.

⚠ Warning

Follow these precautions to prevent personal injury during installation of this equipment:

- Installation must comply with all applicable equipment fire and health codes with the authority having jurisdiction.
- To avoid instability the installation area must be capable of supporting the combined weight of the equipment and product. Additionally the equipment must be level side to side and front to back.
- Remove all removable panels before lifting and installing and use appropriate safety equipment during installation and servicing. Two or more people are required to lift or move this appliance to prevent tipping and/or injury.
- Do not damage the refrigeration circuit when installing, maintaining or servicing the unit.
- Connect to a potable water supply only.
- This equipment contains refrigerant charge.

⚠ Warning

Follow these precautions to prevent personal injury while operating or maintaining this equipment.

- Refer to nameplate to identify the type of refrigerant in your equipment.
- Only trained and qualified personnel aware of the dangers are allowed to work on the equipment.
- Read this manual thoroughly before operating, installing or performing maintenance on the equipment. Failure to follow instructions in this manual can cause property damage, injury or death.
- Crush/Pinch Hazard. Keep hands clear of moving components. Components can move without warning unless power is disconnected and all potential energy is removed.
- Moisture collecting on the floor will create a slippery surface. Clean up any water on the floor immediately to prevent a slip hazard.

⚠ Warning

Follow these precautions to prevent personal injury while operating or maintaining this equipment.

- Objects placed or dropped in the bin can affect human health and safety. Locate and remove any objects immediately.
- Never use sharp objects or tools to remove ice or frost.
- Do not use mechanical devices or other means to accelerate the defrosting process.
- When using cleaning fluids or chemicals, rubber gloves and eye protection (and/or face shield) must be worn.

⚠ DANGER

Do not operate equipment that has been misused, abused, neglected, damaged, or altered/modified from that of original manufactured specifications. This appliance is not intended for use by persons (including children) with reduced physical, sensory or mental capabilities, or lack of experience and knowledge, unless they have been given supervision concerning use of the appliance by a person responsible for their safety. Do not allow children to play with, clean or maintain this appliance without proper supervision.

⚠ Warning

Follow these precautions to prevent personal injury during use and maintenance of this equipment:

- It is the responsibility of the equipment owner to perform a Personal Protective Equipment Hazard Assessment to ensure adequate protection during maintenance procedures.
- Do Not Store Or Use Gasoline Or Other Flammable Vapors Or Liquids In The Vicinity Of This Or Any Other Appliance. Never use flammable oil soaked cloths or combustible cleaning solutions for cleaning.
- All covers and access panels must be in place and properly secured when operating this equipment.
- Risk of fire/shock. All minimum clearances must be maintained. Do not obstruct vents or openings.
- Failure to disconnect power at the main power supply disconnect could result in serious injury or death. The power switch DOES NOT disconnect all incoming power.
- All utility connections and fixtures must be maintained in accordance with the authority having jurisdiction.
- Turn off and lockout all utilities (gas, electric, water) according to approved practices during maintenance or servicing.

Table of Contents

General Information
How to Read a Model Number 15
Head Sections 15
Ice Cube Sizes 16
Model/Serial Number Location 16
Model Numbers 17
Air-Water-Remote Condenser Models 17
Ice Machine Warranty Information 18
LuminIce® II 19

Installation
Ice Deflector 21
Location of Ice Machine 22
Clearance Requirements 23
Air, Water, Remote Condenser Models 23
Ice Machine Heat of Rejection 24
Installation on a Bin 25
Ice Machine on a Dispenser Installation 25
Lineset Applications 26
Remote Condenser 27
Remote Ice Machine Usage with Non-Manitowoc Multi-Circuit Condensers 32

Maintenance
Cleaning and Sanitizing 37
General 37
Cleaning/Sanitizing Procedure 39
Preventative Maintenance Cleaning Procedure 39
Exterior Cleaning 39
Cleaning / Sanitizing Procedure 40
Cleaning Procedure 40
Sanitizing Procedure 43
Parts Removal for Cleaning/Sanitizing 46
Preventative Maintenance Cleaning Procedure 51
Removal from Service/Winterization 53
Air-Cooled Ice Machines 53
Water-Cooled Ice Machines 54

Operation

Control Panel Features 55
Buttons 55
Display Panel 56
Menu Navigation Overview 57
Display Panel Navigation 58
Alerts and Messages 60
Main Menu 61
Machine Info Menu 62
Password Entry 63
Reset Password To Factory Defaults 65
Set-Up Menu 66
Language 67
Time & Date 67
Time Configuration 69
Units 69
Ice Clarity 70
LCD Brightness 70
Password On 71
Edit Password 71
Clean Minder 71
IAuCS Runtime 72
Air Filter 72
Water Filter 73
LuminIce® Reminder 74
Ice Bin Level Sensor 75
USB Setup 75
Factory Defaults 75
Energy Saver Menu 76
Ice Program 77
Water Miser 78
Statistics 78
Service Menu 79
Data History 81
Real Time Data 82
Diagnostics 84
Manual Harvest 85
Replace Control Board 85
USB Setup 85
Event Log Menu 86
Event Log 87

USB Flash Drive Specifications and Formatting 92
Upgrading Firmware with a Flash Drive 94
Exporting Data to a Flash Drive 96
Operational Checks 98
General 98
Ice Thickness Check 99
Sequence of Operation 101
Self Contained Air or Water Cooled. 101
Energized Parts Chart Self Contained Models. 105
Remote Condenser 107
Energized Parts Chart Remote Models. 111

Troubleshooting
Safety Limits 113
Safe Operation Mode 114
Water Assist Harvest 114
Water Thaw Cycle 115
Analyzing Why a Safety Limit Stopped the Ice Machine 116
Safety Limit #1 116
Safety Limit #2 118
Troubleshooting By Symptom 119
Reset To Factory Defaults 120
Symptom #1 Ice Machine Will Not Run 121
Symptom #2 - Freeze Cycle Refrigeration System Operational Analysis Tables 126
Symptom #3 & #4 Harvest Problems Self-contained Air, Water & Remote Condenser Models 155
Symptom #3 Self-Contained Air or Water-cooled. 156
Symptom #3 - Remote Condenser 158
Symptom #4 Self-Contained Air, Water-Cooled Or Remote 160

Component Check Procedures
Electrical Components 163
Control Board, Display Board and Touch Pad 163
Control Board Relay Test 166

Programming A Replacement Control Board 167
Main Fuse 169
Bin Switch. 170
Water Level Control Circuitry. 173
Ice Thickness Probe (Initiates Harvest) 179
High Pressure Cutout (HPCO) Control 184
Fan Cycle Control. 187
Thermistors 188
Harvest Assist Air Pump 191
Compressor Electrical Diagnostics 192
Diagnosing Start Components 194
Refrigeration Components 197
Head Pressure Control Valve 197
Harvest Pressure Regulating (HPR) System Remote Condenser Only 201
Water Regulating Valve 204
Refrigerant Recovery/Evacuation 205
Self-Contained Model Procedure. 205
Remote Condenser Model Procedure 209
System Contamination Clean-Up 215
Determining Severity Of Contamination . . 215
Cleanup Procedure 217
Replacing Pressure Controls Without Removing Refrigerant Charge. 220
Liquid Line Filter-Driers 221
Total System Refrigerant Charge 222

Charts
Cycle Times/24-Hour Ice Production/ Refrigerant Pressure Charts 225
I0300 Series 226
I0320 Series 228
I0450 Series 230
I0500 Series 232
I0520 Series 235
I0600 Series 237
I0850 Series 243
I0906 Series 246
I1000 Series 249
I1106 Series 252

I1200 Series 255
I1400 Series 257
I1406 Series 260
I1800 Series 263

Diagrams
Wiring Diagrams 267
Wiring Diagram Legend 267
I0300/I0450/I0500/I0520 - 1ph air/water . . 268
I0320 - 1ph air/water 269
I0500 - 1ph Remote. 270
I0600/I0606/I0850/I0906/I1000/I1106/I1200 - 1ph air/water. 271
I0600/I606/I0850/I906/I1000/I1106/I1200 - 3ph air/water. 272
I0600/I0606/I0850/I0906/I1000/I1106 - 1ph Remote 273
I0600/I0606/I0850/I0906/I1000/I1106 - 3ph Remote 274
I1400/I1406/I1800 - 1ph air/water. 275
I1400/I1406/I1800 - 3ph air/water. 276
I1400/II1406/I1800 1ph Remote. 277
I1400/I1406/I1800 - 3ph Remote 278
I1400 ECM Fan Motor - 1PH air 279
I1400 ECM Fan Motor - 3PH air 280
Electrical Noise Filter 281
Electronic Control Board 282
Refrigeration Tubing Schematics 283
Self-Contained Air or Water-Cooled 283
Remote Condenser Models 285

THIS PAGE INTENTIONALLY LEFT BLANK

How to Read a Model Number

HEAD SECTIONS

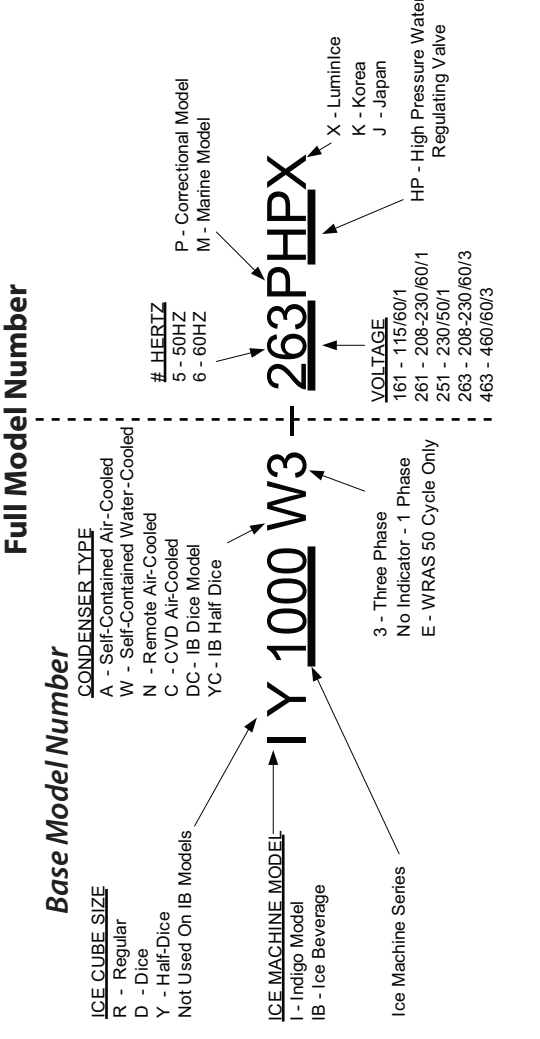

Ice Cube Sizes

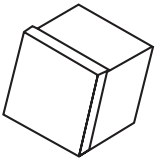

Regular
1-1/8" x 1-1/8" x 7/8"
2.86 x 2.86 x 2.22 cm

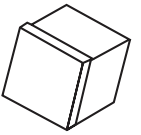

Dice
7/8" x 7/8" x 7/8"
2.22 x 2.22 x2.22 cm

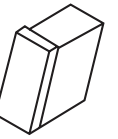

Half Dice
3/8" x 1-1/8" x 7/8"
0.95 x 2.86 x 2.22 cm

⚠ Warning

All Manitowoc ice machines require the ice storage system (bin, dispenser, etc.) to incorporate an ice deflector.

Prior to using a non-Manitowoc ice storage system with other Manitowoc ice machines, contact the manufacturer to assure their ice deflector is compatible with Manitowoc ice machines.

Model/Serial Number Location

These numbers are required when requesting information from your local Manitowoc Distributor, service representative, or Manitowoc Ice. The model and serial number are listed on the OWNER WARRANTY REGISTRATION CARD. They are also listed on the MODEL/SERIAL NUMBER DECAL affixed to the front and rear of the ice machine.

Model Numbers

AIR-WATER-REMOTE CONDENSER MODELS

Self-Contained Air-Cooled	Self-Contained Water-Cooled	Remote
ID0302A	ID0303W	----
IY0304A	IY0305W	----
ID0322A	ID0323W	----
IY0324A	IY0325W	----
ID0452A	D0453W	----
IY0454A	IY0455W	----
IR0500A	IR0501W	IR0590N
ID0502A	ID0503W	ID0592N
IY0504A	IY0505W	IY0594N
IR0520A	IR0521W	----
ID0522A	ID0523W	----
IY0524A	IY0525W	----
ID0602A	ID0603W	ID0692N
IY0604A	IY0605W	IY0694N
ID0606A	ID0606W	ID0696N
IY0606A	IY0606W	IY0696N
IR0850A	IR0851W	IR0890N
ID0852A	ID0853W	ID0892N
IY0854A	IY0855W	IY0894N
IR0906A	IR0906W	IR0996N
ID0906A	ID0906W	ID0996N
IY0906A	IY0906W	IY0996N
ID1002A	ID1003W	ID1092N
IY1004A	IY1005W	IY1094N
ID1106A	ID1106W	ID1196N
IY1106A	IY1106W	IY1196N
ID1202A	ID1203W	----
IY1204A	IY1205W	----
ID1402A	ID1403W	ID1492N
IY1404A	IY1405W	IY1494N
ID1406A	ID1406W	ID1496N
IY1406A	IY1406W	IY1496N
IR1800A	IR1801W	IR1890N
ID1802A	ID1803W	ID1892N
IY1804A	IY1805W	IY1894N

NOTE: Marine and Prison models have a M or P suffix - Example ID0853WM
Suffix at the end of the model number:
3 = 3 phase unit - Example IY1004A3

K = Korean model.
J = Japan model
HP = High Pressure Water Regulating Valve - I0450/I0500 Water Cooled Condenser models

Ice Machine Warranty Information

For warranty information visit:

http://www.manitowocice.com/Service/Warranty

- Warranty Verification
- Warranty Registration
- View and download a copy of the warranty Owner Warranty Registration Card

Warranty coverage begins the day the ice machine is installed.

LuminIce® II

The LuminIce® growth inhibitor recirculates the air in the ice machine foodzone over a UV bulb. This process will inhibit the growth of common micro-organisms on all exposed foodzone surfaces.

- LuminIce® bulbs require replacement on a yearly basis.
- The control board can be set to automatically display a reminder after 12 months.
- A remote light is available for reminder indication.

NOTE: LuminIce® and LuminIce® II bulbs are not interchangeable; verify your model before ordering a replacement bulb.

Cleanup Procedure for Accidental Bulb Breakage

The cleanup procedure is identical to the procedure used to clean up compact fluorescent (CFL) or fluorescent tube lights. These lights contain a small amount of mercury sealed within a glass tube. Breaking these types of lights will release mercury and mercury vapor. The broken bulb can continue to release mercury vapor until it is cleaned up and removed.

The latest EPA procedures can be viewed on their website at www.epa.gov/cfl/cflcleanup.html.

THIS PAGE INTENTIONALLY LEFT BLANK

⚠ Warning

PERSONAL INJURY POTENTIAL

Remove all ice machine panels before lifting.

⚠ Caution

The ice machine head section must be protected if it will be subjected to temperatures below 32°F (0°C). Failure caused by exposure to freezing temperatures is not covered by the warranty. See "Removal from Service/Winterization" on page 53.

ICE DEFLECTOR

An ice deflector is required for all ice machines installed on a bin.

Location of Ice Machine

The location selected for the ice machine must meet the following criteria. If any of these criteria are not met, select another location.

- The location must be free of airborne and other contaminants.
- Self contained air and water cooled - The air temperature must be at least 35°F (1.6°C), but must not exceed 110°F (43.4°C).
- Remote air cooled - The air temperature must be at least -20°F (-29°C), but must not exceed 120°F (49°C)
- Ice Making Water Inlet - Water Pressure must be at least 20 psi (1.38 bar), but must not exceed 80 psi (5.52 bar).
- Condenser Water Inlet - Water Pressure must be at least 20 psi (1.38 bar), but must not exceed 150 psi (10.34 bar).
- The location must not be near heat-generating equipment or in direct sunlight and protected from weather.
- The location must not obstruct air flow through or around the ice machine. Refer to chart below for clearance requirements.
- The ice machine must be protected if it will be subjected to temperatures below 32°F (0°C). Failure caused by exposure to freezing temperatures is not covered by the warranty. See “Removal from Service/ Winterization”

Clearance Requirements

AIR, WATER, REMOTE CONDENSER MODELS

I0300	Self-Contained Air-Cooled	Self-Contained Water-Cooled
Top/Sides	16" (40.6 cm)	8" (20.3 cm)
Back	5" (12.7 cm)	5" (12.7 cm)

I0450 - I0500 I0600 -I0606 I0850 - I0906 I1000 - I1106	Self-Contained Air-Cooled	Water-Cooled and Remote
Top/Sides	8" (20.3 cm)	8" (20.3 cm)
Back	5" (12.7 cm)	5" (12.7 cm)

I0320 - I0520	Self-Contained Air-Cooled	Water-Cooled and Remote
Top/Sides	12" (30.5 cm)	8" (20.3 cm)
Back	5" (12.7 cm)	5" (12.7 cm)
I0500 Tropical Rating 230/50/1 Air-Cooled Only		
Top	24″ (61 cm)	N/A
Sides/back	12″ (30.5 cm)	N/A

I1200	Self-Contained Air-Cooled	Water-Cooled and Remote
Top	8" (20.3 cm)	8" (20.3 cm)
Sides	12" (30.5 cm)	8" (20.3 cm)
Back	5" (12.7 cm)	5" (12.7 cm)

I1400 - I1406 I1800	Self-Contained Air-Cooled	Water-Cooled and Remote
Top/Sides	24" (61.0 cm)	8" (20.3 cm)
Back	12" (30.5 cm)	5" (12.7 cm)

Ice Machine Heat of Rejection

Series Ice Machine	Heat of Rejection	
	Air Conditioning*	Peak
I0300	4600	5450
I0320	3300	4500
I0450	5400	6300
I0500	6100	6900
I0520	5400	6300
I0600/I0606	9000	13900
I0850	13000	16000
I0906	12700	14800
I1000/I1106	16250	18600
I1200	20700	24500
I1400/I1406	23500	27000
I1800	30000	35000

*BTU/Hour
Because the heat of rejection varies during the ice making cycle, the figure shown is an average.

Installation on a Bin

An ice deflector is required for all bin installations and is included with all Manitowoc bins. Order the appropriate deflector kit (30" or 48") for any bin without a deflector.

⚠ Warning

PERSONAL INJURY POTENTIAL

Do not operate any ice machine with the deflector removed.

Ice Machine on a Dispenser Installation

No deflector is needed for machines that match the size of the dispenser (30" head section on a 30" dispenser) unless required by the dispenser manufacturer. Adapters are required when a smaller ice machine is going on a larger dispenser (22" machine on a 30" dispenser).

Lineset Applications

⚠ Warning

The 60-month compressor warranty (including the 36-month labor replacement warranty) will not apply if the Manitowoc Ice Machine, Condenser or QuietQube® Condensing Unit were not installed according to specifications. This warranty also will not apply if the refrigeration system is modified with a condenser, heat reclaim device, or other parts or assemblies not manufactured by Manitowoc Ice.

⚠ Caution

Recovery locations vary by model. Verify you are making the correct connections for your model to prevent accidental release of high pressure refrigerant.

Important

Manitowoc remote systems are only approved and warranted as a complete new package. Warranty on the refrigeration system will be void if new equipment is connected to pre-existing (used) tubing, remote condenser, remote condensing unit or ice machine head section.

REMOTE CONDENSER

Ice Machine	Remote Single Circuit Condenser	Line Set*
I0590N	JC0495	RT-20-R404A RT-35-R404A RT-50-R404A
I0690N I0696N I0890N	JC0895	RT-20-R404A RT-35-R404A RT-50-R404A
I0996N I1090N I1196N	JC0995	RT-20-R404A RT-35-R404A RT-50-R404A
I1490N I1496N I1890N	JC1395	RL-20-R404A RL-35-R404A RL-50-R404A

*Line Set	Discharge Line	Liquid Line
RT	1/2" (1.27 cm)	5/16" (.79 cm)
RL	1/2" (1.27 cm)	3/8" (.95 cm)

Air Temperature Around the Condenser	
Minimum	**Maximum**
-20°F (-29°C)	120°F (49°C)

Additional Refrigerant Charge For 51' to 100' Line Sets

Ice Machine	Condenser	Additional Amount of Refrigerant To Be Added To Nameplate Charge
I0590N	JC0495	1.5 lbs - 680g
I0690N	JC0895	1.5 lbs - 680g
I0696N	JC0895	2 lbs - 907g
I0890N	JC0895	2 lbs - 907g
I0996N	JC0995	2 lbs - 907g
I1090N	JC0995	2 lbs - 907g
I1196N	JC0995	2 lbs - 907g
I1490N	JC1395	2 lbs - 907g
I1496N	JC1395	2 lbs - 907g
I1890N	JC1395	2 lbs - 907g

Calculating Allowable Lineset Distance

Line Set Length

The maximum length is 100' (30.5 m).

Line Set Rise/Drop

The maximum rise is 35' (10.7 m).

The maximum drop is 15' (4.5 m).

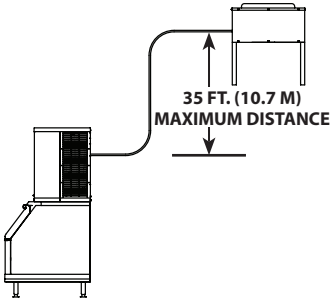

35 ft. (10.7 m) Rise: The maximum distance the Condenser or Condensing Unit can be above the ice machine.

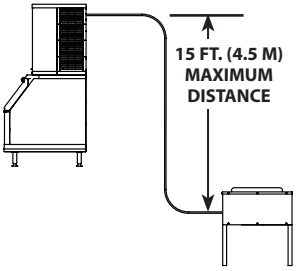

15 ft. (4.5 m) Drop: The maximum distance the Condenser or Condensing Unit can be below the ice machine.

Calculated Line Set Distance

The maximum calculated distance is 150' (45.7 m).

Line set rises, drops, horizontal runs (or combinations of these) in excess of the stated maximums will exceed compressor start-up and design limits. This will cause poor oil return to the compressor.

Make the following calculations to make sure the line set layout is within specifications.

1. Insert the **measured rise** into the formula below. Multiply by 1.7 to get the calculated rise. (Example: A condenser located 10 feet above the ice machine has a **calculated rise** of 17 feet.)
2. Insert the **measured drop** into the formula below. Multiply by 6.6 to get the calculated drop. (Example. A condenser located 10 feet below the ice machine has a **calculated drop** of 66 feet.)
3. Insert the **measured horizontal distance** into the formula below. No calculation is necessary.
4. Add together the **calculated rise, calculated drop,** and **horizontal distance** to get the **total calculated distance**. If this total exceeds 150' (45.7 m), move the condenser to a new location and perform the calculations again.

Maximum Line Set Distance Formula

Step 1
Measured Rise ____ X 1.7 = _____Calculated Rise
(35 ft. Max)

Step 2
Measured Drop ____ X 6.6 = _____Calculated Drop
(15 ft. Max.)

Step 3
Measured Horizontal Distance = _____ Horizontal
(100 ft. Max.) Distance

Step 4
Total Calculated Distance = _____ Total Calculated
(150 ft. Max.) Distance

Remote Ice Machine Usage with Non-Manitowoc Multi-Circuit Condensers

Warranty

The sixty (60) month compressor warranty, including thirty six (36) month labor replacement warranty, shall not apply when the remote ice machine is not installed within the remote specifications. The foregoing warranty shall not apply to any ice machine installed and/or maintained inconsistent with the technical instructions provided by Manitowoc Ice. Performance may vary from Sales specifications. ARI certified standard ratings only apply when used with a Manitowoc remote condenser.

If the design of the condenser meets the specifications, Manitowoc's only approval is for full warranty coverage to be extended to the Manitowoc manufactured part of the system. Since Manitowoc does not test the condenser in conjunction with the ice machine, Manitowoc will not endorse, recommend, or approve the condenser, and will not be responsible for its performance or reliability.

Important

Manitowoc warrants only complete new and unused remote packages. Guaranteeing the integrity of a new ice machine under the terms of our warranty prohibits the use of pre-existing (used) tubing or condensers.

Head Pressure Control Valve

Any remote condenser connected to a Manitowoc Ice Machine must have a head pressure control valve (available from Manitowoc Distributors) installed on the condenser package. Manitowoc will not accept substitute "off the shelf" head pressure control valves

⚠ CAUTION

Do not use a fan cycling control to try to maintain discharge pressure. Compressor failure will result.

Fan Motor

The condenser fan must be on during the complete ice machine freeze cycle (do not cycle on fan cycle control). The ice maker has a condenser fan motor circuit for use with a Manitowoc condenser. It is recommended that this circuit be used to control the condenser fan(s) on the multi-circuit condenser to assure it is on at the proper time. Do not exceed the rated amps for the fan motor circuit listed on the ice machine's serial tag.

Internal Condenser Volume

The multi-circuit condenser internal volume must not be less than or exceed that used by Manitowoc (see chart on page 35). Do not exceed internal volume and try to add charge to compensate, as compressor failure will result.

Condenser ΔT

ΔT is the difference in temperature between the condensing refrigerant and entering air. The ΔT should be 15 to 20°F (-9.4 to -6.6°C) at the beginning of the freeze cycle (peak load conditions) and drop down to 12 to 17°F (-11.1 to -8.3°C) during the last 75% of the freeze cycle (average load conditions).

Refrigerant Charge

Remote ice machines have the serial plate refrigerant charge (total system charge) located in the ice maker section. (Remote condensers and line sets are supplied with only a vapor charge.)

⚠ CAUTION

Never add more than nameplate charge to ice machine for any application.

Quick Connect Fittings

The ice machine and line sets come with quick connect fittings. It is recommended that matching quick connects (available through Manitowoc Distributors) be installed in the multi-circuit condenser, and that a vapor "holding" charge, 5 oz. (150 ml), of proper refrigerant be added to the condenser prior to connection of the ice machine or line set to the condenser.

Ice Machine Model	Refrigerant		Heat of Rejection		Internal Condenser Volume (cu ft)		Design & Burst Pressure	Quick Connect Stubs Male Ends		Head Pressure Control Valve
	Type	Charge	Average Btu/hr	Peak Btu/hr	Min	Max	500 psig 2500 psig	Discharge	Liquid	
I0590	R404A	6 lbs.	6100	6900	0.020	0.035	**Design** 500 psig (3447 kpa) (34.7 bar) **Burst** 2500 psig (17237 kpa) (172.37 bar)	coupling P/N 8360353	coupling P/N 8360343	P/N 8368093
I0690 I0696	R404A	6.5 lbs.	9000	13900	0.045	0.060				
I0890	R404A	8.5 lbs.	13000	16000	0.045	0.060				
I0990 I0996	R404A	7 lbs.	13000	16000	0.045	0.060				
I1090 I1190 I1196	R404A	8.5 lbs.	16250	18600	0.045	0.060				
I1490 I1496	R404A	11 lbs.	23500	27000	0.085	0.105		mounting flange P/N 8360063	mounting flange P/N 8360053	no substitutes
I1890	R404A	12.5 lbs.	30000	35000	0.085	0.105				

THIS PAGE INTENTIONALLY LEFT BLANK

Maintenance

Cleaning and Sanitizing

GENERAL

You are responsible for maintaining the ice machine in accordance with the instructions in this manual. Maintenance procedures are not covered by the warranty.

Clean and sanitize the ice machine every six months for efficient operation. If the ice machine requires more frequent cleaning and sanitizing, consult a qualified service company to test the water quality and recommend appropriate water treatment. An extremely dirty ice machine must be taken apart for cleaning and sanitizing.

Manitowoc Ice Machine Cleaner and Sanitizer are the only products approved for use in Manitowoc ice machines.

⚠ Caution

Use only Manitowoc approved Ice Machine Cleaner and Sanitizer for this application (Manitowoc Cleaner part number 9405463 and Manitowoc Sanitizer part number 9405653). It is a violation of Federal law to use these solutions in a manner inconsistent with their labeling. Read and understand all labels printed on bottles before use.

⚠ Caution

Do not mix Cleaner and Sanitizer solutions together. It is a violation of Federal law to use these solutions in a manner inconsistent with their labeling.

⚠ Warning

Wear rubber gloves and safety goggles (and/or face shield) when handling Ice Machine Cleaner or Sanitizer.

CLEANING/SANITIZING PROCEDURE

This procedure must be performed a minimum of once every six months.

- The ice machine and bin must be disassembled cleaned and sanitized.
- All ice produced during the cleaning and sanitizing procedures must be discarded.
- Removes mineral deposits from areas or surfaces that are in direct contact with water.

PREVENTATIVE MAINTENANCE CLEANING PROCEDURE

- This procedure cleans all components in the water flow path, and is used to clean the ice machine between the bi-yearly cleaning/sanitizing procedure.
- This technology will also allow initiation and completion of a clean or sanitize cycle, after which the ice machine automatically starts ice making again.

EXTERIOR CLEANING

Clean the area around the ice machine as often as necessary to maintain cleanliness and efficient operation.

Wipe surfaces with a damp cloth rinsed in water to remove dust and dirt from the outside of the ice machine. If a greasy residue persists, use a damp cloth rinsed in a mild dish soap and water solution. Wipe dry with a clean, soft cloth.

The exterior panels have a clear coating that is stain resistant and easy to clean. Products containing abrasives will damage the coating and scratch the panels.

- Never use steel wool or abrasive pads for cleaning.
- Never use chlorinated, citrus based or abrasive cleaners on exterior panels and plastic trim pieces.

Cleaning / Sanitizing Procedure

⚠ Caution

Use only Manitowoc approved Ice Machine Cleaner and Sanitizer for this application (Manitowoc Cleaner part number 9405463 and Manitowoc Sanitizer part number 9405653). It is a violation of Federal law to use these solutions in a manner inconsistent with their labeling. Read and understand all labels printed on bottles before use.

CLEANING PROCEDURE

⚠ Caution

Do not mix Cleaner and Sanitizer solutions together. It is a violation of Federal law to use these solutions in a manner inconsistent with their labeling.

⚠ Warning

Wear rubber gloves and safety goggles (and/or face shield) when handling Ice Machine Cleaner or Sanitizer.

Ice machine cleaner is used to remove lime scale and mineral deposits. Ice machine sanitizer disinfects and removes algae and slime.

NOTE: Although not required and dependent on your installation, removing the ice machine top cover may allow easier access.

Step 1 Open the front door to access the evaporator compartment. Ice must not be on the evaporator during the clean/sanitize cycle. Follow one of the methods below:

- Press the power switch at the end of a harvest cycle after ice falls from the evaporator(s).
- Press the power switch and allow the ice to melt.

⚠ Caution

Never use anything to force ice from the evaporator. Damage may result.

Step 2 Remove all ice from the bin/dispenser.

Step 3 Press the clean switch. Water will flow through the water dump valve and down the drain. Wait until the water trough refills and the display indicates add solution (approximately 1 minute), then add the proper amount of ice machine cleaner.

Model	Amount of Cleaner
I0300/I0320/I0520	3 ounces (90 ml)
I0450/I0500/I0600/I0606/I0850 I0906/I1000/I1106/I1200	5 ounces (150 ml)
I1400/I1406/I1800	9 ounces (265 ml)

Step 4 Wait until the clean cycle is complete (approximately 24 minutes). Then disconnect power to the ice machine (and dispenser when used).

> **⚠ Warning**
>
> Disconnect the electric power to the ice machine at the electric service switch box.

Step 5 Remove parts for cleaning.

Please refer to the proper parts removal for your ice machine. Continue with step 6 when the parts have been removed.

Single Evaporator Ice Machines - page 48

Step 6 Mix a solution of cleaner and lukewarm water. Depending upon the amount of mineral buildup, a larger quantity of solution may be required. Use the ratio in the table below to mix enough solution to thoroughly clean all parts.

Solution Type	Water	Mixed With
Cleaner	1 gal. (4 L)	16 oz (500 ml) cleaner

> **⚠ CAUTION**
>
> Do not clean the ice thickness probe in a dishwasher. Permanent damage to the ice thickness probe will occur.

Step 7 Use 1/2 of the cleaner/water mixture to clean all components. The cleaner solution will foam when it contacts lime scale and mineral deposits; once the foaming stops use a soft-bristle nylon brush, sponge or cloth (NOT a wire brush) to carefully clean the parts. Soak parts for 5 minutes (15 - 20 minutes for heavily scaled parts). Rinse all components with clean water.

Step 8 While components are soaking, use 1/2 of the cleaner/water solution to clean all food zone surfaces of the ice machine and bin (or dispenser). Use a nylon brush or cloth to thoroughly clean the following ice machine areas:

- Side walls
- Base (area above water trough)
- Evaporator plastic parts - including top, bottom, and sides
- Bin or dispenser

Rinse all areas thoroughly with clean water.

SANITIZING PROCEDURE

Step 9 Mix a solution of sanitizer and lukewarm water.

Solution Type	Water	Mixed With
Sanitizer	3 gal. (12 L)	2 oz (60 ml) sanitizer

Step 10 Use 1/2 of the sanitizer/water solution to sanitize all removed components. Use a spray bottle to liberally apply the solution to all surfaces of the removed parts or soak the removed parts in the sanitizer/water solution. Do not rinse parts after sanitizing.

Step 11 Use 1/2 of the sanitizer/water solution to sanitize all food zone surfaces of the ice machine and bin (or dispenser). Use a spray bottle to liberally apply the solution. When sanitizing, pay particular attention to the following areas:

- Side walls
- Base (area above water trough)
- Evaporator plastic parts - including top, bottom and sides
- Bin or dispenser

Do not rinse the sanitized areas.

Step 12 Replace all removed components.

Step 13 Wait 20 minutes.

Step 14 Reapply power to the ice machine and press the Clean button.

Step 15 Wait until the water trough refills and the display indicates add solution (approximately 1 minute). Add the proper amount of Manitowoc Ice Machine Sanitizer to the water trough by pouring between the water curtain and evaporator.

Model	Amount of Sanitizer
I0300/I0320/I0520	3 ounces (90 ml)
I0450/I0500/I0600/I0606/I0850 I0906/I1000/I1106/I1200	3 ounces (90 ml)
I1400/I1406/I1800	6 ounces (180 ml)

Step 16 Select Auto Ice On, press the Checkmark and close and secure the front door. The ice machine will automatically start ice making after the sanitize cycle is complete (approximately 24 minutes).

PARTS REMOVAL FOR CLEANING/SANITIZING

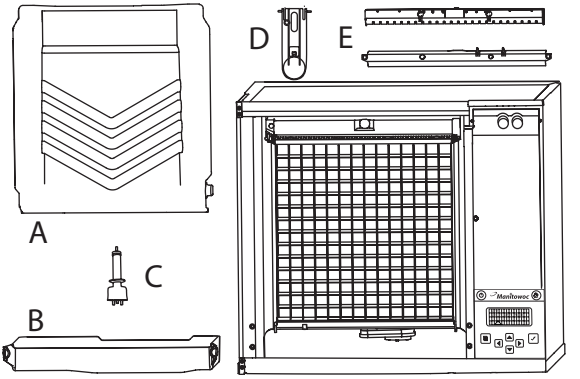

A. Remove the water curtain

- Gently flex the curtain in the center and remove it from the right side.
- Slide the left pin out.

B. Remove the water trough

- Depress tabs on right and left side of the water trough.
- Allow front of water trough to drop as you pull forward to disengage the rear pins.

C. Remove the water level probe

- Pull the water level probe straight down to disengage.
- Lower the water level probe until the wiring connector is visible.
- Disconnect the wire lead from the water level probe.
- Remove the water level probe from the ice machine.

D. Remove the ice thickness probe

- Compress the hinge pin on the top of the ice thickness probe.
- Pivot the ice thickness probe to disengage one pin then the other. The ice thickness probe can be cleaned at this point without complete removal. If complete removal is desired, disconnect the ice thickness control wiring from the control board.

E. Remove the water distribution tube

NOTE: Distribution tube thumbscrews are retained to prevent loss. Loosen thumbscrews but do not pull thumbscrews out of distribution tube.

- Loosen the two outer screws (do not remove screws completely they are retained to prevent loss) and pull forward on the distribution tube to release from slip joint.
- Disassemble distribution tube by loosening the two (2) middle thumbscrews and dividing the distribution tube into two pieces.

Proceed to page 42, Step 6

Ice Thickness Probe & Water Level Probe

Clean the probes using the following procedure.

1. Mix a solution of Manitowoc ice machine cleaner and water (2 ounces of cleaner to 16 ounces of water) in a container.
2. Clean all probe surfaces including all plastic parts (do not use abrasives). Verify all surfaces are clean. Thoroughly rinse probes with clean water.
3. Reinstall probe, then sanitize the ice machine and bin/dispenser interior surfaces.

Water Inlet Valve

The water inlet valve normally does not require removal for cleaning. Refer to "Water System Checklist" page 137, if you are troubleshooting water related problems.

1. When the ice machine is off, the water inlet valve must completely stop water flow into the machine. Watch for water flow.

When the ice machine is on, the water inlet valve must allow the proper water flow through it. Press the Power button to energize the ice machine. Watch for water flow into the ice machine. If the water flow is slow or only trickles into the ice machine, refer to water system checklist.

⚠ Warning

Disconnect the electric power to the ice machine and dispenser at the electric service switch box and turn off the water supply before proceeding.

Water Dump Valve

The water dump valve normally does not require removal for cleaning. To determine if removal is necessary:

1. Locate the water dump valve.
2. Press the power button and stop ice making.
3. While the ice machine is in the freeze mode, check the water trough to determine if the dump valve is leaking. If there is no or little water in the water trough (during the freeze cycle) the dump valve is leaking.
   A. If the dump valve is leaking, remove, disassemble and clean it.
   B. If the dump valve is not leaking, do not remove it. Instead, follow the "Ice Machine Cleaning Procedure".

Preventative Maintenance Cleaning Procedure

This procedure cleans all components in the water flow path, and is used to clean the ice machine between the bi-yearly cleaning/sanitizing procedure.

Ice machine cleaner is used to remove lime scale and mineral deposits. Ice machine sanitizer disinfects and removes algae and slime.

NOTE: Although not required and dependant on your installation, removing the ice machine top cover may allow easier access.

1. Ice must not be on the evaporator during the clean/sanitize cycle. Follow one of the methods below:

- Press the power switch at the end of a harvest cycle after ice falls from the evaporator(s).
- Press the power switch and allow the ice to melt.

⚠ Caution

Never use anything to force ice from the evaporator. Damage may result.

2. Open the front door to access the evaporator.

3. Press the Clean button. Water will flow through the water dump valve and down the drain. Wait until the water trough refills and the display indicates "Add Chemical" (approximately 1 minute), then add the proper amount of ice machine cleaner.

Model	Amount of Cleaner
I0300/I0320/I0520	3 ounces (90 ml)
I0450/I0500/I0600/I0606/I0850 I0906/I1000/I1106/I1200	5 ounces (150 ml)
I1400/I1406/I1800	9 ounces (265 ml)

4. Select "Auto Ice On", press the Checkmark and close and secure the front door. The ice machine will automatically start ice making after the clean cycle is complete (approximately 24 minutes).

Removal from Service/Winterization

General

Special precautions must be taken if the ice machine is to be removed from service for an extended period of time or exposed to ambient temperatures of 32°F (0°C) or below.

> **⚠ Caution**
>
> If water is allowed to remain in the ice machine in freezing temperatures, severe damage to some components could result. Damage of this nature is not covered by the warranty.

Follow the applicable procedure below.

AIR-COOLED ICE MACHINES

1. Press the power button.
2. Turn off the water supply.
3. Remove the water from the water trough.
4. Disconnect and drain the incoming ice-making water line at the rear of the ice machine.
5. Energize the ice machine and wait one minute for the water inlet valve to open.
6. Blow compressed air in both the incoming water and the drain openings in the rear of the ice machine until no more water comes out of the water inlet lines or the drain.
7. Disconnect the electric power at the circuit breaker or the electric service switch.
8. Make sure water is not trapped in any of the water lines, drain lines, distribution tubes, etc.

WATER-COOLED ICE MACHINES

1. Perform steps 1-6 under "Self-Contained Air-Cooled Ice Machines."
2. Disconnect the incoming water and drain line from the water-cooled condenser.
3. Energize the ice machine in the freeze cycle. The increasing refrigerant pressure will open the water regulating valve.
4. Blow compressed air through the condenser until no water remains.

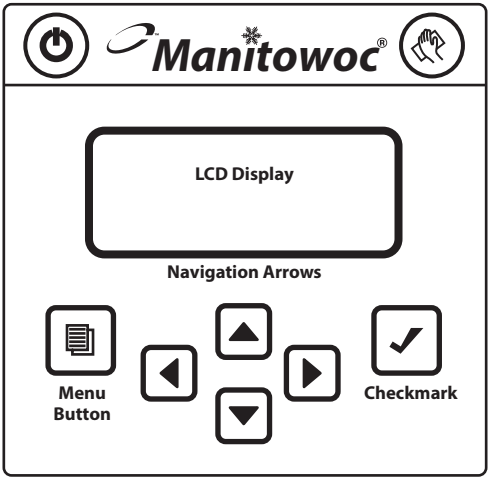

Control Panel Features

The control panel offers a series of pressure sensitive buttons and a four-line interactive display panel.

BUTTONS

Power Button: Powers the ice machine when in the On/Off Mode. The ice machine can also be programmed to automatically power on and off in two Energy Saver modes.

Cleaning Button: Initiates a cleaning cycle. Refer to the *Maintenance* section for details.

Menu Button: Accesses main menu structure. Moves the display from the Home Screen, where ice machine status, alerts and messages are viewed, to the Main Menu, where machine information and its event log can be accessed, machine and Energy Saver settings can be adjusted, and service issues can be addressed.

Left and Right Arrows: The Left arrow moves the display to the previous screen, allowing the user to "back out" of programming. Both the Left and Right arrows will move the cursor (underline) within a line of settings. NOTE: The Right arrow can also be used on many screens interchangeably with the checkmark to make a selection.

Up and Down Arrows: Move the highlight [brackets] up one line or down one line.

Checkmark: Makes a selection and/or moves to the next screen (or line) and is used like an "enter" button.

DISPLAY PANEL

The LCD display panel is 16 characters wide and four lines deep. During ice machine operation and cleaning cycles, the Home screen's top three lines provide valuable status information and the fourth line shows alerts and messages. In programming, four lines of the current screen are displayed and highlights, arrows, cursor and selections inform the user of available actions.

Menu Navigation Overview

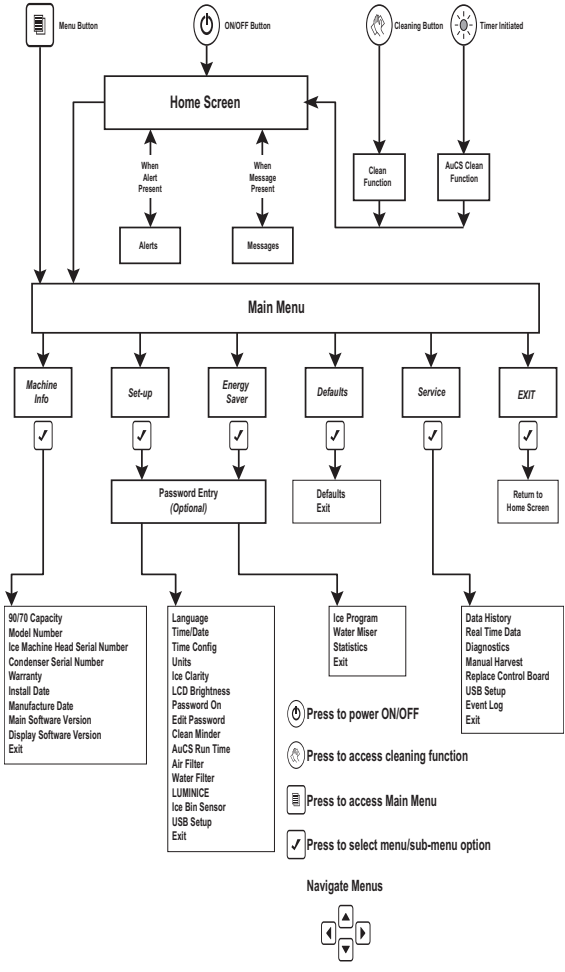

NOTE: The ice machine will automatically set the installation date after 100 freeze/harvest cycles.

Display Panel Navigation

```
[Language   >]▼
 Time & Date >
 Time Config >
 Units       >  ▼
```

Highlights: Brackets indicate if a line on the screen is "highlighted" or actionable. Move the brackets from line to line using the Down or Up arrow. Move the brackets down from the fourth line to view more of the menu displayed.

Arrows: Two kinds of arrows give cues to additional information. ">" symbols show that another screen is available by pressing Checkmark or > while a line is highlighted. " ▼ " and " ▲ " symbols indicate the limits of the screen viewed. NOTE: Another cue to the length of a menu screen is that Exit is the last item.

```
 07 24 10
 14:08
 Exit     >
```

Cursor: A cursor (flashing rectangle) is used within lines where actual settings can be adjusted. In these screens, use the Up and Down arrows to make changes to the value underlined. Move the cursor from digit to digit using the Right and Left arrows. Use the Checkmark to move the cursor down one line. Exit and re-enter the screen to start again at the top.

[	M	o	/	D	a	y	/	Y	r		(	✓	)	]	▼
	D	a	y	/	M	o	/	Y	r		(		)		
	1	2		H	o	u	r				(		)		
	2	4		H	o	u	r				(	✓	)		▼

Selections: When parentheses ( ) appear, they indicate a selection is available by pressing Checkmark while the line is highlighted. If the choice is exclusive, selecting it with the Checkmark will uncheck another selection. That is, in the above Time Config example, selecting Day/Mo/Yr will deselect Mo/Day/Yr.

Alerts and Messages

When messages and alerts exist, they will be highlighted and can be selected with the Left arrow. Alerts displayed will have priority over messages.

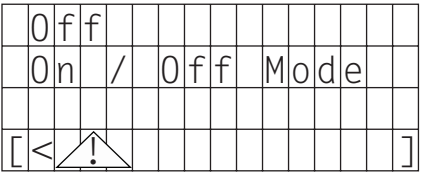

For example, if alerts are appearing in the fourth line of the display:

1. Press the Left arrow. A list of alerts will appear in the display.
2. Choose the alert you wish to address by moving the highlight brackets with the Down arrow.
3. Press Checkmark again. A screen appears with the date, time and total number of times an alert has occurred. Pressing the Down arrow will list some possible causes for the alert. At the bottom of the screen you will be able to clear the alert by pressing the Checkmark.
4. Return to the Home screen by selecting Exit and pressing the Checkmark.

Main Menu

From the Home screen, press the Menu button to enter the Main menu, where you can choose to see machine information, make setup changes, set the Energy Saver mode, or enter the Service Menu.

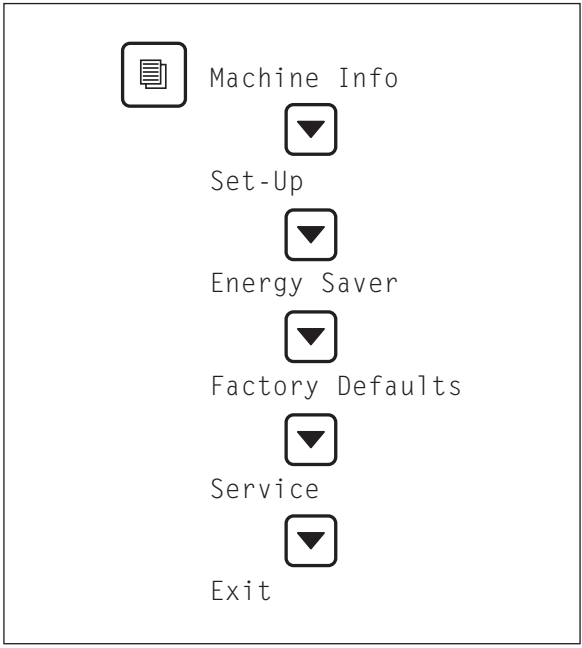

Main Menu

Machine Info Menu

From the Main menu, ensure that Machine Info is highlighted and press the Checkmark to view a list including capacity, model number, IMH (Ice Machine Head) serial number, condenser serial number, warranty, installation date, date of manufacture and software version. Use the Down arrow to highlight an item and use the Checkmark to view the information. Press the Left arrow to return to previous screens.

Machine Info Menu

- 90/70 capacity
- Model #
- Ice Machine Head Serial #
- Condenser Serial #
- Warranty
    - Machine
    - Evaporator
    - Compressor
- Install Date
- Manufacture Date
- Main Control Board Software Version
- Display Software Version

Password Entry

A password is not required, although a password can be turned on to prevent unauthorized control setting modification. You can use the Factory Default Password of "1234" or enter a four digit custom pin number of your choosing.

To turn on the password feature use the following procedure.

1. Press the Menu button.
2. From the Main menu, use the Down arrow to highlight setup and press the Right arrow.
3. Use the Down arrow to highlight Password ON and press the Right arrow.
4. Press the Right arrow again with Enter Passwrd highlighted and a cursor will flash.
5. Use the Up & Down arrows to enter the factory password (1, 2, 3, 4). Enter the number 1 in the flashing cursor (first digit of the factory password).
6. Press the right arrow to move to the next cell and use the Up & Down arrows to add the number 2. Repeat this process to add 3 & 4.
7. When the last number is entered press the Checkmark button to save your entry.

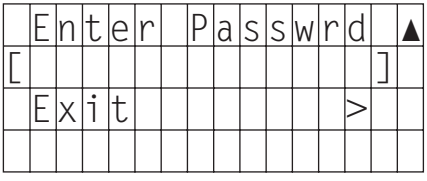

To enter a four digit password of your choosing use the following procedure.

1. Press the Menu button.
2. From the Main menu, use the Down arrow to highlight setup and press the Right arrow.
3. Use the Down arrow to select Edit Password and press the Right arrow.
4. Using the Up & Down arrows, enter the first digit of the factory password in the flashing icon.
5. Press the right arrow to move to the next cell and use the Up & Down arrows to add the number 2. Repeat this process to add 3 & 4.
6. When the last number is entered press the Checkmark button.
7. Follow steps 4 & 5 and enter your 4 digit password.
8. When the last number is entered press the Checkmark button to save your entry.

RESET PASSWORD TO FACTORY DEFAULTS

The password can be reset to the factory defaults when required. The default factory password is 1234.

The entire setup can be reset to the factory defaults.

1. From the Set-Up menu, use the Down arrow to highlight Fact Deflts.
2. Press the Checkmark two times to reset the ice machine. The display will return to the Set-Up menu.

Setting	Default
Language	English
Time Configuration	Mo/Day/Yr/24 Hour
Units	Fahrenheit/Lbs/Gallons
Ice Clarity	Off
LCD Brightness	Level 2
Password	Off - Enter Password Default Password = 1234
Edit Password	Off - Edit Password
Clean Minder	Off
AuCS RunTime	Off
Air Filter Minder	Off
Water Filter Minder	Auto
LuminIce Bulb Minder	No
Ice Bin Sensor	None

Set-Up Menu

From the Main menu, use the Down arrow to navigate to Set-Up and press the Checkmark. Select and customize machine settings on this menu. Press the Left arrow to return to previous screens.

Set-Up ✓ Language
↓
Time & Date
↓
Time Configuration
↓
Units
↓
Ice Clarity
↓
LCD Bright
↓
Password On
↓
Edit Password
↓
Clean Minder
↓
AuCS RunTime
↓
Air Filter
↓
Water Filter
↓
LUMINICE
↓
Ice Bin Sensor
↓
USB Setup
↓
Exit

Set-Up Menu

LANGUAGE

1. From the Set-Up menu, use the Down arrow to highlight Language.
2. Press the Checkmark. You can choose to view the display in a language other than English, by highlighting your choice and pressing the Checkmark. Selecting one language will deselect the others.
3. When the check reflects your preference, use the Down arrow to navigate to Exit and press the Checkmark. The display will return to the Set-Up menu.

TIME & DATE

When the ice machine is installed, the correct time and date needs to be set for its location.

[	M	o	/	D	a	y	/	Y	r		(	✓	)	]	▼
	D	a	y	/	M	o	/	Y	r		(		)		
	1	2		H	o	u	r				(		)		
	2	4		H	o	u	r				(	✓	)		▼

Set the Time and Date

1. Press the Menu button.
2. Press the Down arrow until Set-Up is highlighted [bracketed].
3. Press the Checkmark. The Set-Up menu will be displayed and Time & Date will be highlighted [bracketed].

4. Press the Checkmark. The date will appear on the first line of the display (Mo/Day/Yr) and the time will appear on the second line (24 Hour). The month will have a blinking cursor.
5. Using the Up or Down arrow, adjust the month, if necessary.
6. When the correct month appears, use the Right arrow to move the blinking cursor to day.
7. Using the Up or Down arrow, adjust the day, if necessary.
8. When the correct day appears, use the Right arrow to move the blinking cursor to year.
9. Using the Up or Down arrow, adjust the year, if necessary.
10. When the correct year appears, press the Checkmark. Use the Right arrow to move the blinking cursor to hour.
11. Using the Up or Down arrow, adjust the hour, if necessary.
12. When the correct hour appears, use the Right arrow to move the blinking cursor to minutes.
13. Using the Up or Down arrow, adjust the minutes, if necessary.
14. When the correct minutes appear, press the Checkmark twice.

TIME CONFIGURATION

1. From the Set-Up menu, use the Down arrow to highlight Time Config.
2. Press the Checkmark. On this screen, you can choose whether the date will be displayed as Mo/Day/Yr or Day/Mo/Yr by highlighting your choice and pressing the Checkmark. Selecting one will deselect the other.
3. You can also choose whether the time will be displayed as 12 Hour or 24 Hour by highlighting your choice and pressing the Checkmark. Selecting one will deselect the other.
4. When the two checks reflect your preference, use the Down arrow to navigate to Exit and press the Checkmark. The display will return to the Set-Up menu.

UNITS

1. From the Set-Up menu, use the Down arrow to highlight Units.
2. Press the Checkmark. On this screen, you can choose whether the ice machine will display measurements in Celsius or Fahrenheit, kilograms or pounds, and gallons or liters by highlighting your choice of each pair and pressing the Checkmark. Selecting one of each pair will deselect the other. Make sure to navigate with the Down arrow to make all three choices.
3. When the three checks reflect your preferences, use the Down arrow to navigate to Exit and press the Checkmark. The display will return to the Set-Up menu.

ICE CLARITY

In areas with poor potable water quality, the ice machine may produce cloudier ice. Setting Ice Clarity to ON will add additional water during the freeze cycle to dilute the water that contains a high content of dissolved solids in the water trough. This feature decreases production and increases water usage. A water filter is recommended to produce the highest quality ice while maintaining the least expensive mode of operation.

1. From the Set-Up menu, use the Down arrow to highlight Ice Clarity.
2. Press the Checkmark. On this screen, you can choose to turn the ice clarity feature ON or OFF by highlighting your choice and pressing the Checkmark. Selecting one will deselect the other.
3. When the check reflects your preference, use the Down arrow to navigate to Exit and press the Checkmark. The display will return to the Set-Up menu.

LCD BRIGHTNESS

Here, the brightness of the LCD display can be adjusted.

1. From the Set-Up menu, use the Down arrow to highlight LCD Bright.
2. Press the Checkmark. You will see one of four checkmarks indicating the brightness levels of the display. Level 1 is one checkmark, level 2 is two checkmarks, Level 3 is three checkmarks, etc.
3. Use the Up and Down arrows to select your preference.
4. When the checkmarks reflect your preference, press the Checkmark. The display will return to the Set-Up menu.

PASSWORD ON

A password can be added to prevent unauthorized changes to ice machine settings.

1. From the Set-Up menu, use the Down arrow to highlight Password On.
2. Enter the password and press the Checkmark.
3. Press the Left arrow to return to previous screens and to the Set-Up menu.

EDIT PASSWORD

The password can be changed on this screen.

1. From the Set-Up menu, use the Down arrow to highlight Edit Password.
2. Press the Checkmark and confirm current password.
3. Enter new password and press the Checkmark.
4. Press the Left arrow to return to previous screens and to the Set-Up menu.

CLEAN MINDER

Clean Minder is a feature that displays a cleaning reminder at a set time interval.

1. From the Set-Up menu, use the Down arrow to highlight Clean Minder.
2. Press the Checkmark. On this screen, you can choose to turn the reminder ON or OFF by highlighting your choice and pressing the Checkmark. Selecting one will deselect the other.
3. You can also choose the time interval from this screen by highlighting Set Interval and pressing the Checkmark.
4. Press the Left arrow to return to previous screens and to the Set-Up menu.

IAUCS RUNTIME

Automatic Cleaning System is an optional accessory and will perform a cleaning cycle at a set time interval.

1. From the Set-Up menu, use the Down arrow to highlight AuCS RunTime.
2. Press the Checkmark. On this screen, you can choose to turn the feature ON or OFF by highlighting your choice and pressing the Checkmark. Selecting one will deselect the other.
3. You can also choose the time interval from this screen by highlighting Set Interval and pressing the Checkmark.
4. Press the Left arrow to return to previous screens and to the Set-Up menu.

AIR FILTER

The ice machine has a feature that displays a clean air filter reminder at a set time interval.

1. From the Set-Up menu, use the Down arrow to highlight Air Filter.
2. Press the Checkmark. On this screen, you can choose to turn the reminder to AUTO or OFF by highlighting your choice and pressing the Checkmark. Selecting one will deselect the other.
3. You can also choose the time interval from this screen by highlighting Set Interval and pressing the Checkmark.
4. Press the Left arrow to return to previous screens and to the Set-Up menu.

WATER FILTER

The ice machine has a feature that displays a replace water filter reminder at a set time interval.

1. From the Set-Up menu, use the Down arrow to highlight Water Filter.
2. Press the Checkmark. You can record the filter type on this screen by highlighting Filter Type and pressing the Checkmark. After making your selection (AR10,000, AR20,000, AR40,000), scroll down to exit and press the Checkmark.
3. You can also choose to turn the reminder to AUTO, NONE or OFF by highlighting your choice and pressing the Checkmark. Selecting one will deselect the other.
   - Selecting Auto sets the reminder based on water usage for the selected filter.
   - Selecting None will turn off the reminder.
   - Selecting Off sets the timer to the selected reminder time (2 weeks to 6 months).
4. You can further choose the time interval from this screen by highlighting Set Interval and pressing the Checkmark.
5. Press the Left arrow to return to previous screens and to the Set-Up menu.

LUMINICE® REMINDER

The LuminIce® growth inhibitor recirculates the air in the ice machine foodzone over a UV bulb. This process will inhibit the growth of common micro-organisms on all exposed foodzone surfaces.

The Bulb Minder is a feature that displays a reminder to change its bulb every 12 months.

1. From the Set-Up menu, use the Down arrow to highlight LuminIce Minder.
2. Press the Checkmark. On this screen, you can choose to turn the reminder to AUTO or OFF by highlighting your choice and pressing the Checkmark. Selecting one will deselect the other.
3. When the check reflects your preference, use the Down arrow to navigate to Exit and press the Checkmark. The display will return to the Set-Up menu.

ICE BIN LEVEL SENSOR

Ice bin sensor is an optional accessory that allows the ice level in the bin to be set to one of three different levels. The bin level can be set seasonally to match usage, which results in lower energy costs and fresher ice.

1. From the Set-Up menu, use the Down arrow to highlight Ice Bin Sensor.
2. Press the Checkmark. On this screen, you can choose to set the ice level to Low, Medium or High by highlighting your choice and pressing the Checkmark. Selecting one will deselect the other.

When the check reflects your preference, use the Down arrow to navigate to Exit and press the Checkmark. The display will return to the Set-Up menu.

USB SETUP

Refer to "Upgrading Firmware with a Flash Drive" and "Exporting Data to a Flash Drive" for more information on this setting. Flash drives must be correctly sized and formatted - 2 gigabytes or smaller, Fat 32 file system, 512 allocation units - Refer to page 92 for full specification and formatting details.

FACTORY DEFAULTS

The entire setup can be reset to factory defaults listed on page 65.

1. From the Set-Up menu, use the Down arrow to highlight Fact Default.
2. Press the Checkmark two times to reset the ice machine. The display will return to the Set-Up menu.

Energy Saver Menu

From the Main menu, use the Down arrow to navigate to Energy Saver and press the Checkmark. Set up an energy saving ice program, enable the Water Miser and view usage statistics from this menu. Press the Left arrow to return to previous screens.

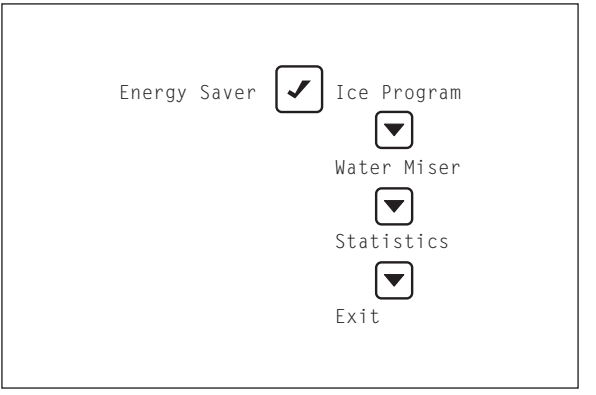

Energy Saver Menu

ICE PROGRAM

To save energy and water, the ice machine can be programmed to only power up during time periods that the ice will be used or when the bin level is being depleted by heavy use.

1. In the Energy Saver menu, ensure that Ice Program is highlighted.
2. Press the Checkmark. On this screen, you can choose to turn on the time program (Time Prog) bin level program (Bin Level) or ice usage program (Ice Program) by highlighting your choice and pressing the Checkmark. Selecting one will deselect the other. If one of them is selected and you wish to turn both off, highlight the choice and press Checkmark again.
3. If none of the programs are selected, highlighting Settings and pressing the Checkmark will select the times, bin level or pounds of ice per day. If one of the programs is selected, highlight Settings and press the Checkmark to choose the times or bin levels. NOTE: For details on how to use the cursor for the time program, refer to "Display Panel Navigation" in this section.
4. Select Exit to return to previous screens and again to the Energy Saver menu.

WATER MISER

Water Miser is a feature that depending on water quality can reduce water usage by eliminating flush cycles.

1. From the Energy Saver menu, use the Down arrow to highlight Water Miser.
2. Press the Checkmark. On this screen, you can choose to turn the Water Miser ON or OFF by highlighting your choice and pressing the Checkmark. Selecting one will deselect the other.
3. Use the Down arrow to navigate to Exit and press the Checkmark to return to the Energy Saver menu.

STATISTICS

1. From the Energy Saver menu, use the Down arrow to highlight Statistics.
2. Press the Checkmark. Choose to view ice usage, or potable water and energy statistics by highlighting your choice and pressing the Checkmark.
3. Press the Left arrow to return to previous screens and to the Energy Saver menu.

Service Menu

From the Main menu, use the Down arrow to navigate to Service and press the Checkmark. This menu is intended for the use of trained service personnel. Below is an overview of the service menu. The following pages list the navigation options available by drilling into the menus with the Right arrow.

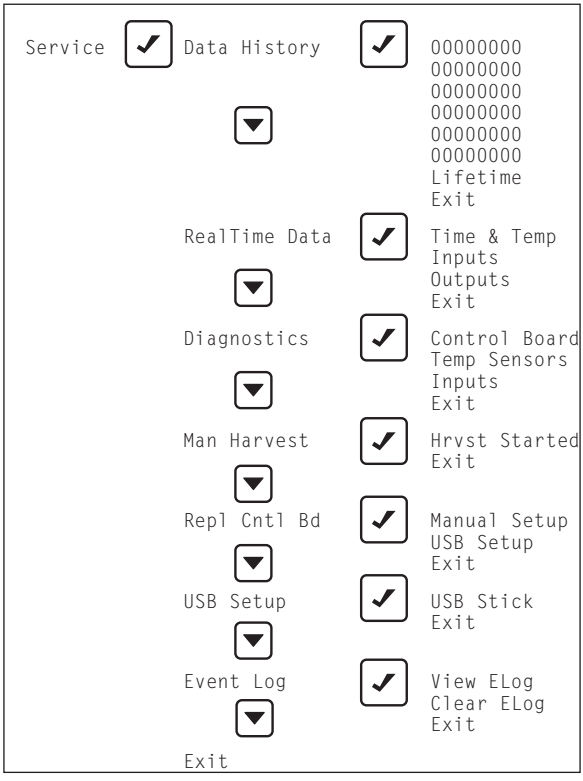

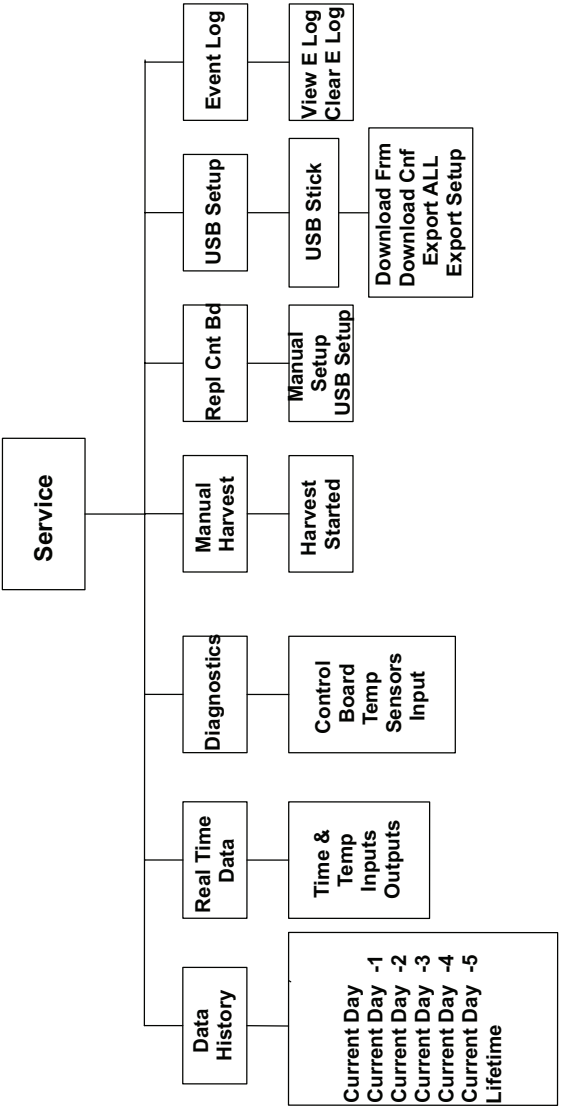
Service
Data History
Current Day
Current Day -1
Current Day -2
Current Day -3
Current Day -4
Current Day -5
Lifetime
Real Time Data
Time & Temp Inputs Outputs
Diagnostics
Control Board Temp Sensors Input
Manual Harvest
Harvest Started
Repl Cnt Bd
Manual Setup USB Setup
USB Setup
USB Stick
Download Frm
Download Cnf
Export ALL
Export Setup
Event Log
View E Log
Clear E Log

DATA HISTORY

Press the Checkmark with Data History highlighted to view a list of eight-digit dates (Current, Current + 1 ... Current + 5), along with Lifetime (be sure to use the Down arrow to reveal all the available information).

For each of the dates, use the Checkmark to view:

- Minimum Freeze
- Maximum Freeze
- Minimum Harvest
- Maximum Harvest
- Maximum Temperature Delta T3 - T4
- Delta
- T3
- T4
- RunTime
- Ice Production
- Cycle Count
- Potable Water
- Clean Cycles
- Exit

For Lifetime, use the Checkmark to view:

- Install Date
- Control Board Replacement Date
- Control Board DOM (Date Of Manufacture)
- RunTime
- Cycle Count
- Potable Water
- Clean Cycles
- Exit

REAL TIME DATA

Press the Checkmark with Real Time Data highlighted to get readings on Time & Temp, Inputs and Outputs (be sure to use the Down arrow to reveal all the available information).

Use the Checkmark to view:

Time and Temperature

- Status Off/On - Displays stage of cycle
- Time
- T1 Thermistor Temperature
- T2 Thermistor Temperature
- T3 Thermistor Temperature
- T4 Thermistor Temperature
- T3 & T4 Delta Temperature
- 100 hz
- 120 hz
- Exit

Inputs

- Status Off/On - Displays stage of cycle
- Curtain Switch 1
- Curtain Switch 2
- LPCO Switch
- HPCO Switch
- Bin Level - Low (Optional Bin Level Probe) Status
- Bin Level - Medium (Optional Bin Level Probe) Status
- Bin Level High (Optional Bin Level Probe) Status
- Sensing Ice No/Yes
- Water Level Low No/Yes
- Water Level High No/Yes
- Exit

Outputs

- Status Off/On - Displays stage of cycle
- Water Pump Off/On
- Hot Gas Valve 1 Off/On
- Hot Gas Valve 2 Off/On
- Air Pump Off/On
- Water Valve Off/On
- Dump Valve Off/On
- Compressor Control Off/On
- AuCS Relay Off/On
- Ionic Cln Off/On
- Exit

DIAGNOSTICS

Press the Checkmark with Diagnostics highlighted to enter screens where you can run diagnostics on the control board, sensors and switches.

Control Board

- Self Check
- Enable Relays
- Exit

Temperature Sensors

- T1 Thermistor Temperature
- T2 Thermistor Temperature
- T3 Thermistor Temperature
- T4 Thermistor Temperature
- Exit

Inputs

- Curtain Switch 1 Closed/Open
- Curtain Switch 2 Closed/Open
- LPCO Switch Closed/Open
- HPCO Switch Closed/Open
- Bin Level - Low (Optional Bin Level Probe) Closed/Open
- Bin Level - Medium (Optional Bin Level Probe) Closed/Open
- Bin Level - High (Optional Bin Level Probe) Closed/Open
- Sensing Ice No/Yes
- Water Level Low No/Yes
- Water Level High No/Yes
- Exit

MANUAL HARVEST

Press the Checkmark with Manual Harvest highlighted to initiate a manual harvest.

- Manual Harvest
- Harvest Started
- Exit

REPLACE CONTROL BOARD

Press the Checkmark with Replace Control Board highlighted to program the replacement control board. The data can copied from the defective control board (refer to "Exporting Data to a Flash Drive" on page 96), or entered manually through the Indigo interface.

- Manual Setup
  - Board Install Date
  - Input Model Number
  - Input Serial Number
  - Condenser/condensing unit serial number
- USB Setup
  - Insert Drive
  - Press Checkmark and wait for completion
- Exit

USB SETUP

- USB Stick
  - Download Firmware
    Insert drive and wait for completion
  - Download Configuration
    Insert drive and wait for completion
  - Export All
    Insert drive and wait for completion
  - Export Setup
    Insert drive and wait for completion
- Exit

EVENT LOG MENU

From the Service menu, use the Down arrow to navigate to Event Log and press the Checkmark.

Ensure View ELog is highlighted and press the Checkmark to see the first event code, when it occurred and how many times. Use the Down arrow to view information on subsequent event codes. For more information on event codes, see "Service Menu". Use the Left arrow to return to the Event Log menu.

To clear the event log: In the Event Log Menu, use the Down arrow to highlight Clear ELog and press the Checkmark. Press the Left arrow to return to previous screens.

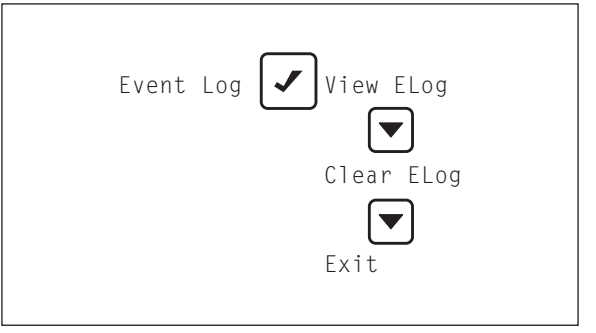

Event Log Menu

EVENT LOG

Refer to the following table for Event Code descriptions.

Code	Description
E01	Long Freeze Cycle
E02	Long Harvest Cycle
E03	Input Power Loss
E04	High Condenser Temperature
E05	High Pressure Control Opened
E06	Spare
E07	Starving TXV Single Evaporator or Low On Charge
E08	TXV Fault Single or Dual Circuit Evaporators
E09	Flooding Evaporator Fault Single Evaporator, Single Circuit
E10	Flooding Evaporator Fault Dual TXV, Dual Circuit
E11	Refrigeration Fault
E12	Curtain Switch Fault - E Board = Open more than 12 hours, G Board after Revision 4.017 = Open more than 24 hours
E13	Spare
E14	Spare
E15	Fan Cycle Control Fault - Lo Liquid Line Temperature
E16	Remote Condensing Unit Fault (ICVD Only)
E17	Spare
E18	Spare
E19	Ice Thickness Probe Fault
E20	Water System Fault
E21	T1 Temperature Sensor Issue
E22	T2 Temperature Sensor Issue
E23	T3 Temperature Sensor Issue
E24	T4 Temperature Sensor Issue
E25	Bin Level Probe Low Sensor Fault
E26	Bin Level Probe Medium Sensor Fault
E27	Bin Level Probe High Sensor Fault
E28	AuCS
E29	USB Communication Fault
E30	USB Download Fault
E31	Safe Mode
E32	RS485 Communication Fault
E33	KeyBoard Fault
E34	Display Fault

Event Log Detail

Detail Event Log Service Definition			
E-Log	**Display Text**	**Error Description**	**Definition**
E01	**Long Freeze**	Long Freeze	6 consecutive 60 Minute Freeze cycles = shut down and flash the SL#1 light on board
E02	**Long Harvest**	Long Harvest	3 consecutive - 3.5 Minute Harvests logs SL#2 in memory, but runs until 500 long harvest cycles occur.
E03	**Power Loss**	Power Supply (Event Log only - No Alert)	When power is interrupted to the ice machine the control board will log the event in the ELOG and stamp the loss of power on power-up.
E04	**Hi Cnd Temp or Wtr Cnd Fault**	Air Condenser High temp, or water Condenser High temperature G Board Rev 4.017 - Alert only after 10 consecutive trips	1). Liquid Line Temperature too High for Self-contained Air Cooled Ice machine = Air Cooled Condenser Fault 2). Liquid Line Temperature too High for Self-contained Water Cooled ice machine = Water Cooled Condenser Fault
E05	**HPC Fault**	High Pressure Cutout (HPC)	The high pressure cutout switch (HPCO) opened 3 times in 4 hour period
E06		Spare	
E07	**Starving TXV**	Starving Evaporator for single TXV or low on charge G Board Rev 4.017 - Event Log only no alert	10 consecutive occurrences where the Difference of the Average evaporator inlet (T3) and outlet (T4) is greater than 12°F in the last 1 minute of the freeze cycle (ELOG-E07)
E08	**TXV Fault**	Air/Water Only TXV malfunction in dual circuit/ single evaps (TXV Fault)	10 consecutive occurrences where the Difference of the Average evaporator inlet (T3) and outlet (T4) is greater than 12°F in the last 1 minute of the freeze cycle (ELOG-E07)
E09	**Flood Evap 1**	Flooding evaporator for single circuit single evaporator (flooding evap)	Average compressor discharge line temperature last 6 seconds of Prechill +50°F (T1) compared to average of first 6 minutes of freeze cycle (T2), is less than 1.05°F
E10	**Flood Evap 2**	Flooding evaporator for dual TXV dual circuit / single evaporator (Flooding Evap)	Average compressor discharge line temperature last 6 seconds of Prechill +50°F (T1) compared to average of first 6 minutes of freeze cycle (T2), is less than 1.05°F

Detail Event Log Service Definition

E-Log	Display Text	Error Description	Definition
E11	**Refig Fault**	Refrigeration System (Refrig Fault) Air & Water-cooled Only	The compressor discharge temperature did not increase by at least 10 F, and the evaporator temperature did not decreased by at least 10 F - Measured from Refrigeration Start up or Prechill until 2 minutes into the Freeze cycle. G Board Rev 4.017 - Event Log only no alert
E12	**Curtain Fault**	Curtain Switch open for more than 24 hours (Curtain Fault)	The ice machine is set to ice making and remains in bin full condition for more than 24 hours. The curtain switch is open or curtain is off. G Board Rev 4.017 = 24 hrs - E Board = 12 hrs
E13		Spare	
E14		Spare	
E15	**Low Liq Temp**	Low amb control fault durring low amb	If the liquid line temperature drops below 60 F for any period exceeding continuous 1 minute during the the freeze cycle. G Board Rev 4.017 - Event Log only no alert
E16	**Rmt Cnd Fault**	Remote Condenser Fault ICVD Condensing Unit only	If the liquid line temperature drops below 40 F, or exceeds 140 F for more than 1 continuous minute during the freeze cycle. G Board Rev 4.017 - Event Log only no alert
E17		Spare	
E18		Spare	
E19	**ITP Fault**	Ice Probe (ITP)	The monitored Frequencies is out of the appropriate range (Probe unplugged or problem with microphone). G Board Rev 4.017 - Event Log only no alert
E20	**WTR Fault**	Water System Fault	Any of the following: 1) Sensing high water probe and not low water probe = Water fault. 2) The Evaporator outlet temperature is less than -10°F 6.5 to 7.5 Minutes into freeze. 3) The Low Water probe is satisfied at the end of harvest. 4) Low or High water probe satisfied at end of freeze cycle. G Board Rev 4.017 - Event Log only no alert

Detail Event Log Service Definition

E-Log	Display Text	Error Description	Definition
E21	**T1 Fault**	T1 Sensor	Each thermistor reading is monitored continuously using six second average values. During Pre-chill a thermistor had a six second average thermistor values fall outside of the valid temperature range.
E22	**T2 Fault**	T2 Sensor	
E23	**T3 Fault**	T3 Sensor	
E24	**T4 Fault**	T4 Sensor	
E25	**Bin Prb Fault**	Bin Low Sens	Each thermistor reading is monitored continuously using six second average values. A thermistor had a six second average value outside of the valid range for more than 10 continous minutes
E26	**Bin Prb Fault**	Bin Med Sens	
E27	**Bin Prb Fault**	Bin Hi Sens	
E28	**AUCS**	AUCS (Aucs not Present) (Event Log only - No alarm)	When the AUCS clean option is selected from the menu, the control checks for the presence of the AUCS board and if the AUCS is not connected it will signal an Ev ent “AUCS”. This will be cleared as soon as the hardware is detected.
E29	**USB COMM**	USB Comm (Event Log only - No Alarm)	USB Communication error, no USB drive in port or defective USB drive
E30	**USB DNLD**	USB download error (dlnd) Event Log only - No alarm)	USB Download error related to USB drive or a defective USB drive
E31	**Safe Mode**	Safe Mode (Event Log only - No alarm)	Safe mode allows the ice machine to operate for a period of time in the event of a WLP or ITP sensor failure. The controller allows the machine to operate based on historical information collected and model data information stored in the controllers memory.

Detail Event Log Service Definition

E-Log	Display Text	Error Description	Definition
E32	**RS485 COMM**	Event Log only - No Alarm	The device plugged into the RS485 port is not communicating between the control board and gateway.
E33	**KEYBOARD**	Event Log only - No Alarm	The Key board is not plugged into the control board or is faulty.
E34	**DISPLAY**	Event Log only - No Alarm	The Key board is not plugged into the control board or is faulty.

USB FLASH DRIVE SPECIFICATIONS AND FORMATTING

Updating firmware on Indigo™ model ice machines requires a properly formatted 2 GB or smaller USB flash drive. All USB flash drives must be formatted before use to remove any software programs or files currently on the flash drive.

USB Flash Drive Specifications:

- USB 2 Version
- 2 GB or less capacity
- Fat32 File System
- 512 MB File Allocation Unit

USB Flash Drive Formatting:

Procedure to format a USB flash drive varies with operating system software.

Windows 7 or Windows Vista Computers:

1. Insert USB flash drive; your computer may indicate:
   - "Found New Hardware" follow the prompts to install the USB flash drive
   - USB flash drive may auto play - Close auto play window
2. Press Windows Key and E key simultaneously to access windows explorer.
3. Right click on your USB Flash Drive.
4. Left click on "Format".
5. Verify or select the settings below:
   - USB flash drive capacity - 2 GB or less
   - File System - Fat32
   - Allocation Unit Size - Must be 512 MB
   - Volume Label is Optional - Rename if desired
   - Deselect "Perform A Quick Format" (no checkmark)
6. Left click on "Start" - You will receive a warning - "Formatting will remove all data" left click "OK". A "Format Complete" box will display when formatting is finished. Close the pop up and windows explorer.

Windows XP Computers:

1. Insert USB flash drive; your computer may indicate:
   - "Found New Hardware" follow the prompts to install the USB flash drive
   - USB flash drive may auto launch - Close auto launch window.
2. To access Disk Management:
   - Left click on the Windows Start Button
   - Left click on "Run"
   - Type compmgmt.msc and left click on "OK"
   - Left click on "Disk Management".
3. Verify USB flash drive capacity is 2 GB or less
4. Right click on the USB flash drive, then left click on "Format" from the drop down list.
5. Verify or select the settings below:
   - Volume Label is Optional - Rename if desired
   - File System - Fat32
   - Allocation Unit Size must be 512 MB
   - Deselect "Perform A Quick Format" (no checkmark)
6. Left click on "OK" you will receive a warning - "Formatting will remove all data" left click on "OK", wait until formatting is complete and "status" indicates "Healthy", then close the disk management window.

UPGRADING FIRMWARE WITH A FLASH DRIVE

Important

The flash drive must be formatted before using, All files and software on the flash drive are removed during the formatting process. Refer to page 92 USB Flash Drive Specifications and Formatting.

1. Drag and drop the files from website or email onto a flash drive.
2. Ensure that the ice machine's power is on.
3. Press the Menu button.
4. Press the Down arrow until Service is highlighted.
5. Press the Checkmark. The Service menu will be displayed.

6. Press the Down arrow until USB Setup is highlighted.
7. Press the Checkmark. USB Stick will appear highlighted.
8. Press the Checkmark again. A submenu with Download Frm (Download Firmware) appears.
9. Ensure that Download Frm is highlighted and press the Checkmark. A display of instructions will appear.

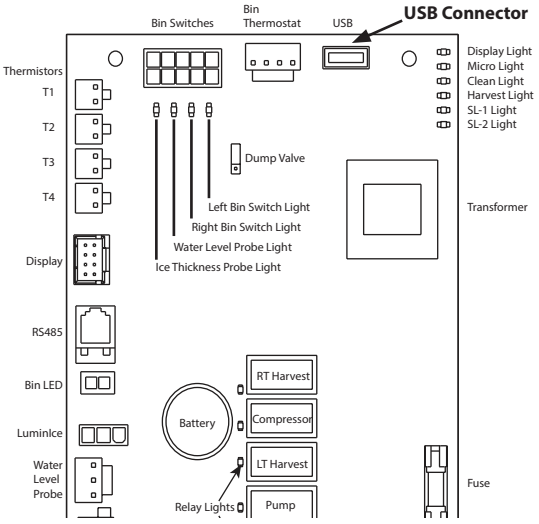

Control Board

10. Follow the on-screen instructions:
    A. Insert Drive (Insert the flash drive into the USB port on the ice machine's control board.)
    B. Press Check (Press the Checkmark.) Do not remove flash drive, touch display buttons or remove power while firmware is updating.
    C. The display will return to the home screen in the off mode.
11. Reboot control board by removing power for 15 seconds and reapplying power.
12. Verify the new firmware version loaded by navigating to Menu/Machine information/Main Software Version and verify the firmware version number.

EXPORTING DATA TO A FLASH DRIVE

Data can be copied from the control board memory to a flash drive and used to transfer setup and/or cycle data to a replacement control board or to transfer setup information to multiple ice machines. Data may also be requested by service department personnel for analysis or as an aid to troubleshooting. The data files are small and can be attached to an email.

Important

The flash drive must be formatted before using, Refer to page 92 USB Flash Drive Specifications and Formatting. All files and data are deleted during the formatting process.

1. Ensure that the ice machine's power is on.
2. Press the Menu button.
3. Press the Down arrow until Service is highlighted.
4. Press the Checkmark. The Service menu will be displayed.

5. Press the Down arrow until USB Setup is highlighted.

6. Press the Checkmark. USB Stick will appear highlighted.Press the Checkmark again. A submenu with Export ALL and Export Setup appears.

NOTE:
There are four files stored in ice machine memory:

- Asset Data - ASDATAoo.CSV
- Operating Data - OPDATAoo.CSV
- Real Time Data - RTDATAoo.CSV
- Ice Machine Settings - Settinoo.CSV

Select only "Ice Machine Settings" file when multiple machines will be programmed with the same user specified settings. Select "Export All" if you are installing a replacement board.

7. Highlight Export ALL or Export Setup, depending on your requirements, and press the Checkmark. A display of instructions will appear.
8. Follow these on-screen instructions to:
   A. Insert Drive (Insert the flash drive into the USB port on the ice machine's control board.)
   B. Press Check (Press the Checkmark.)
   C. Wait For Comp (Wait approximately 5 to 10 minutes for the download to complete.)
   D. Depending on software version either Export Complete, Success or the Home screen will appear.

Operational Checks

GENERAL

Manitowoc ice machines are factory-operated and adjusted before shipment. Normally, new installations do not require any adjustment.

To ensure proper operation, always follow the Operational Checks:

- when starting the ice machine for the first time
- after a prolonged out of service period
- after cleaning and sanitizing

NOTE: Routine adjustments and maintenance procedures are not covered by the warranty.

Important

Refrigeration compressors must be operated for a minimum break in period of 24 hours before full ice production will be reached.

ICE THICKNESS CHECK

The ice thickness probe is factory-set to maintain the ice bridge thickness at 1/8 in. (3 mm).

NOTE: Make sure the water curtain/splash shields are in place when performing this check. It prevents water from splashing out of the water trough. Remove the curtain to make an adjustment, then replace immediately after the adjustment is made.

1. Inspect the bridge connecting the cubes. It should be about 1/8 in. (3 mm) thick.
2. If adjustment is necessary, turn the ice thickness probe adjustment screw clockwise to increase bridge thickness or counterclockwise to decrease bridge thickness. Set a 9/32” gap between the ice thickness probe and evaporator as a starting point. Then adjust to achieve 1/8” ice thickness.
3. Make sure the ice thickness probe wire and the bracket do not restrict movement of the probe.

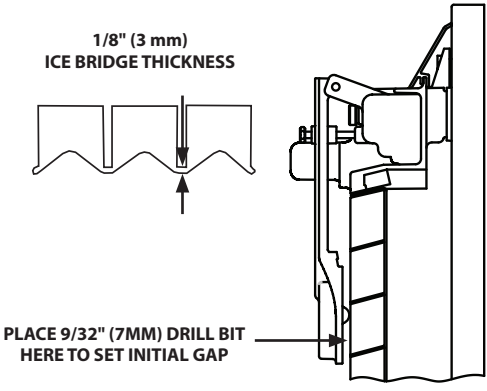

Ice Thickness Check

NOTE: Turning the adjustment 1/3 of a turn will change the ice thickness about 1/16” (1.5 mm).

Control Board Timers

The control board has the following non-adjustable timers:

- The ice machine is locked into the freeze cycle for 6 minutes before a harvest cycle can be initiated. This can be overridden by initiating a manual harvest. Refer to "Manual Harvest" on page 85
- The maximum freeze time is 35 minutes at which time the control board automatically initiates a harvest sequence.
  Firmware 5.009 or earlier - Maximum freeze time is 60 minutes at which time the control board automatically initiates a harvest sequence.
- The maximum harvest time is 7 minutes, the control board will preform a water thaw cycle and then return the ice machine to the freeze cycle.
  Firmware 5.009 or earlier - The maximum harvest time is 3.5 minutes. The control board automatically initiates a freeze sequence when this time is exceeded.
- The maximum water fill is 12 minutes.

Sequence of Operation

SELF CONTAINED AIR OR WATER COOLED

NOTE: The power button must be depressed and the water curtain/ice dampers must be in place on the evaporator before the ice machine will start.

Initial Start-Up or Start-Up After Automatic Shut-Off

1. Water Purge

Before the compressor starts, the water pump and water dump solenoid energize to purge the ice machine of old water. This feature ensures that the ice making cycle starts with fresh water.

2. Refrigeration System Equalization and Start-Up

The harvest valve(s) and air pump(s) energize to equalize high and low side refrigeration pressure.

After 5 seconds the contactor energizes the compressor and supplies power to the condenser fan motor. After 5 seconds the harvest valve(s) and air pump(s) de-energize.

NOTE: The fan motor is wired through a fan cycle pressure control and will cycle on and off when the room temperatures is below 70°F (21°C).

Freeze Sequence

3. Prechill

The compressor is on for 30 seconds (120 seconds initial cycle) to lower the temperature of the evaporator(s) before the water pump is energized. The water fill valve will energize and remain on until water touches the low and high, water level probes.

4. Freeze

Water Pump

The water pump(s) energizes and water flows over the evaporator. The water pump is energized throughout the freeze cycle.

Water Inlet Valve

The water inlet valve energized in prechill (30 seconds) and can energize up to two times in the freeze cycle. The control board will prevent the water fill valve from energizing after two 6 minute water fill time limits.

After water contacts the low and high water probes the water fill valve de-energizes. Ice builds on the evaporator and the water level drops. When water loses contact with the high water probe, the water fill valve energizes until water contacts the high water probe again.

Ice Thickness Probe

The freeze cycle continues until the six minute freeze lock expires and enough ice has formed to send a signal from the ice thickness probe to the control board.

During the first 6 minutes of the freeze cycle the ice thickness probe microphone samples ambient noise. 6 minutes into the freeze cycle 4 baseline readings are recorded. Ice formation on the evaporator will change the readings; when two of the four baseline readings are exceeded a harvest cycle starts.

Harvest Sequence

5. Water Purge

The air pump(s) (when used) and the harvest valve(s) open at the beginning of the water purge to divert hot refrigerant gas into the evaporator.

The water pump(s) continues to run, and the water dump valve energizes to purge the water in the water trough.

6. Harvest

The air pump (when used) remains energized and the harvest valve(s) remains open. The refrigerant gas warms the evaporator causing the cubes to slide, as a sheet, off the evaporator and into the storage bin.

The sliding sheet of cubes opens the water curtain/ice damper and bin switch.

The momentary opening and re-closing of the bin switch terminates the harvest sequence and returns the ice machine to the freeze sequence (Step 3 - 4.)

7. Automatic Shut-Off

When the storage bin is full at the end of a harvest sequence, the sheet of cubes fails to clear the water curtain/ice damper and will hold it open. After the water curtain/ice damper is held open for 30 seconds, the ice machine shuts off. The ice machine remains off for 3 minutes before it can automatically restart.

The ice machine remains off until enough ice has been removed from the storage bin to allow the ice to fall clear of the water curtain or all of the ice dampers. As the water curtain/ice dampers swing back to the closed position, the bin switch re-closes and the ice machine restarts (steps 1 - 2), provided the 3 minute delay period is complete.

ENERGIZED PARTS CHART SELF CONTAINED MODELS

Self Contained Air & Water-Cooled Models

Ice Making Sequence of Operation	Water Pump	Harvest Valve(s)	Air Pump(s)*	Water Inlet Valve	Water Dump Valve	Contactor Coil	Compressor	Condenser Fan Motor	Length of Time
Start-Up 1. Water Purge 2. Refrigeration System Start-up A. Pressure Equalization	**On**	**Off**	**Off**	**Off**	**On**	**Off**	**Off**	**Off**	*45 Seconds*
	Off	**On**	**On**	**Off**	**Off**	**Off**	**Off**	**Off**	*5 Seconds*
B. Compressor Startup	**Off**	**On**	**On**	**Off**	**Off**	**On**	**On**	**On**	*5 Seconds*
Freeze Sequence 3. Prechill	**Off**	**Off**	**Off**	**May Cycle On/Off during pre-chill**	**Off**	**On**	**On**	May Cycle **On/Off**	*Initial Start-Up is 120 Seconds* *30 Seconds thereafter*

Self Contained Air & Water-Cooled Models (Continued)

Ice Making Sequence of Operation	Water Pump	Harvest Valve(s)	Air Pump(s)*	Water Inlet Valve	Water Dump Valve	Contactor Coil	Compressor	Condenser Fan Motor	Length of Time
4. Freeze	**On**	**Off**	**Off**	**Cycles Off then On two more times**	**Off**	**On**	**On**	May Cycle **On/Off**	*Until Ice Contact w/ Ice Thickness Probe*
Harvest Sequence	**On**	**On**	**On**	**Off**	**On**	**On**	**On**	May Cycle **On/Off**	*Factory Set at 45 Seconds*
5. Water Purge 6. Harvest	**Off**	**On**	**On**	**Off**	**Off**	**On**	**On**	May Cycle **On/Off**	*Bin Switch Activation*
7. Automatic Shut-Off	**Off**	**Off**	**Off**	**Off**	**Off**	**Off**	**Off**	**Off**	*Until 3 Minute Delay Expires and Bin Switch Re-closes*

* NOT USED ON ALL MODELS

REMOTE CONDENSER

NOTE: The power button must be depressed and the water curtain/ice dampers must be in place on the evaporator before the ice machine will start.

Initial Start-Up or Start-Up After Automatic Shut-Off

1. Water Purge

Before the compressor starts, the water pump and water dump solenoid are energized for 45 seconds, to completely purge the ice machine of old water. This feature ensures that the ice making cycle starts with fresh water.

2. Refrigeration System Equalization and Start-Up

The harvest valve, air pump(s) and harvest pressure regulating (HPR) solenoid valves energize to equalize high and low side refrigeration pressure.

After 5 seconds the liquid line solenoid valve energizes and the contactor energizes the compressor and condenser fan motor.

Freeze Sequence

3. **Prechill**

The compressor is on for 30 seconds (120 seconds initial cycle) to lower the temperature of the evaporator(s) before the water pump is energized. The water fill valve will energize and remain on until water touches the low and high water level probes.

4. **Freeze**

Water Pump

The water pump(s) energizes and water flows over the evaporator. The water pump is energized throughout the freeze cycle.

Water Inlet Valve

The water inlet valve energized in prechill and can energize up to two times in the freeze cycle. The control board will prevent the water fill valve from energizing after two 6 minute water fill time limits.

After water contacts the low and high water probes the water fill valve de-energizes. Ice builds on the evaporator and the water level drops. When water loses contact with the high water probe, the water fill valve energizes until water contacts the high water probe again.

Ice Thickness Probe

The freeze cycle continues until the six minute freeze lock expires and enough ice has formed to send a signal from the ice thickness probe to the control board.

During the first 6 minutes of the freeze cycle the ice thickness probe microphone samples ambient noise. 6 minutes into the freeze cycle 4 baseline readings are recorded. Ice formation on the evaporator will change the readings; when two of the four baseline readings are exceeded a harvest cycle starts.

Harvest Sequence

5. Water Purge

The air pump (when used) the harvest valve(s) and harvest pressure regulating valve (HPR) energize to divert hot refrigerant gas to the evaporator.

The water pump continues to run, and the water dump valve energizes to purge the water in the water trough.

6. Harvest

The harvest valve, air pump(s) and harvest pressure regulating (HPR) solenoid valves remain energized and the refrigerant gas warms the evaporator causing the cubes to slide, as a sheet, off the evaporator and into the storage bin. The sliding sheet of cubes opens the water curtain/ice damper and bin switch. The momentary opening and re-closing of the bin switch terminates the harvest sequence and returns the ice machine to the freeze sequence (Step 3 - 4.)

7. Automatic Shut-Off

When the storage bin is full at the end of a harvest sequence, the sheet of cubes fails to clear the water curtain/ice damper and will hold it open. After the water curtain/ice damper is held open for 30 seconds, the ice machine shuts off. The ice machine remains off for 3 minutes before it can automatically restart.

The ice machine remains off until enough ice has been removed from the storage bin to allow the ice to drop clear of the water curtain/ice damper. As the water curtain/ice damper closes the bin switch the ice machine restarts (steps 1 - 2) provided the 3 minute delay period is complete.

ENERGIZED PARTS CHART REMOTE MODELS

Remote Air-Cooled Condenser Models
Energized Parts Chart

Ice Making Sequence of Operation	Water Pump	Harvest Valve(s)	Air Pump(s)*	Water Inlet Valve	Water Dump Valve	Contactor Coil Liquid Line Solenoid	Compressor	Condenser Fan Motor	Length of Time
Initial Start-Up 1. Water Purge 2. Refrigeration System Start-up A. Equalization	**On**	**Off**	**Off**	**Off**	**On**	**Off**	**Off**	**Off**	*45 Seconds*
	Off	**On**	**On**	**Off**	**Off**	**Off**	**Off**	**Off**	*5 Seconds*
B. Compressor Startup	**Off**	**On**	**On**	**Off**	**Off**	**On**	**On**	**On**	*5 Seconds*
Freeze Sequence 3. Prechill	**Off**	**Off**	**Off**	**May Cycle On/Off during pre-chill**	**Off**	**On**	**On**	**On**	*Initial Start-Up is 120 Seconds* *30 Seconds thereafter*

Remote Air-Cooled Condenser Models
Energized Parts Chart (Continued)

Ice Making Sequence of Operation	Water Pump	Harvest Valve(s)	Air Pump(s)*	Water Inlet Valve	Water Dump Valve	Contactor Coil Liquid Line Solenoid	Compressor	Condenser Fan Motor	Length of Time
4. Freeze	**On**	**Off**	**Off**	**Cycles Off then On two more times**	**Off**	**On**	**On**	**On**	*Until Ice Contact w/ Ice Thickness Probe*
Harvest Sequence	**On**	**On**	**On**	**Off**	**On**	**On**	**On**	**On**	*Factory Set at 45 Seconds*
5. Water Purge 6. Harvest	**Off**	**On**	**On**	**Off**	**Off**	**On**	**On**	**On**	*Bin Switch Activation*
7. Automatic Shut-Off	**Off**	**Off**	**Off**	**Off**	**Off**	**Off**	**Off**	**Off**	*Until 3 Minute Delay Expires and Bin Switch Re-closes*

* NOT USED ON ALL MODELS

Safety Limits

In addition to standard safety controls, the control board has built in safety limit controls which protect the ice machine from major component failures.

Safety limits are stored and indicated by the control board. The number of cycles required to stop the ice machine varies for each safety limit.

- **Safety Limit 1** - If the freeze time reaches 35 minutes, the control board automatically initiates a harvest cycle. If 6 consecutive 35-minute freeze cycles occur, the ice machine stops
  Firmware 5.009 or earlier - If the freeze time reaches 60 minutes, the control board automatically initiates a harvest cycle. If 6 consecutive 60 minute freeze cycles occur, the ice machine stops
- **Safety Limit 2** - If the harvest time reaches 7 minutes, the control board will start a water thaw cycle and automatically return the ice machine to the freeze cycle. After 3 consecutive long harvest cycles the ice machine stops.
  Firmware 5.009 or earlier - If the harvest time reaches 3.5 minutes the control board will automatically start a freeze cycle. If 500 consecutive 3.5 minutes harvest cycles occur, the ice machine stops.

SAFE OPERATION MODE

Allows the ice machine to operate up to 72 hours if the ice thickness probe (E19 fault) and/or water level probe sensors fail (E20 fault).

- When the control board starts the safe mode an alert is flashed on the LCD display to notify the end-user they have a production problem.
- The control board automatically initiates and monitors the safe mode. The control will automatically exit the safe mode if a normal signal is received from the input.
- After 72 hours the control board will enter a standby mode and turn off

The control board needs a five cycle history to operate safe mode. If five cycles have never been successfully completed the ice machine will shut-off.

WATER ASSIST HARVEST

FIRMWARE VERSION 5.010 AND HIGHER

When the damper/curtain does not open within 3.5 minutes in the harvest cycle the following occurs:

- 3.5 minutes - The water inlet valve energizes until water touches the high water level probe.
- 4 minutes - The water pump energizes.
- 6.5 to 7 minutes - The water dump valve energizes.

WATER THAW CYCLE

FIRMWARE VERSION 5.010 AND HIGHER

When the damper/curtain does not open during the 7 minute harvest cycle the following water thaw cycle occurs:

- 7 minutes - The compressor, harvest solenoid valve and dump valve de-energize.
  The water pump remains energized and the water inlet valve energizes until water touches the high water level probe.
- Water is circulated, dumped and refilled to the high water level probe 18 times (approximately 1 hour).
  Model 1200 or smaller:
  Circulate 165 seconds, dump 45 seconds
  Model 1400 and larger
  Circulate 240 seconds, dump 120 seconds
- At the end of the thaw cycle the ice machine will start another freeze cycle (approximately 1 - 1.75 hour).

Curtain Operation In Water Assist Harvest

- Open & close damper = Continue Thaw Cycle
- Open damper 30 seconds = Full Bin Shutoff

NOTE: Use the keypad and turn the ice machine off and then on to terminate the cycle. Disconnecting and reconnecting power to end the cycle will result in the ice machine restarting in a harvest cycle.

ANALYZING WHY A SAFETY LIMIT STOPPED THE ICE MACHINE

Safety limits are designed to stop the ice machine prior to major component failures, most often a minor problem or something external to the ice machine. This may be difficult to diagnose, as many external problems occur intermittently.

Example: An ice machine stops intermittently on safety limit #1 (long freeze times). The problem could be a low ambient temperature at night, a water pressure drop, the water is turned off one night a week, etc.

Refrigeration and electrical component failures will cause a safety limit trip. Eliminate all electrical components and external causes first. If it appears that the refrigeration system is causing the problem, use Manitowoc's Freeze Cycle Refrigeration System Operational Analysis Table, along with detailed charts, checklists, and other references to determine the cause.

The following checklists are designed to assist the service technician in analysis. However, because there are many possible external problems, do not limit your diagnosis to only the items listed.

SAFETY LIMIT #1

Firmware version 5.010 and higher

Freeze time exceeds 35 minutes for 6 consecutive freeze cycles.

Firmware version 5.09 and lower

Freeze time exceeds 60 minutes for 6 consecutive freeze cycles.

Possible cause checklist

Improper Installation

- Refer to "Installation/Visual Inspection Checklist" on page 136

Water System

- Dirty/defective water level probe
- Low water pressure (20 psig min.)
- High water pressure (80 psig max.)
- High water temperature (90°F/32.2°C max.)
- Clogged water distribution tube
- Dirty/defective water fill valve
- Dirty/defective water dump valve
- Defective water pump
- Loss of water from sump area

Electrical System

- Low incoming voltage
- Ice thickness probe out of adjustment
- Harvest cycle not initiated electrically
- Contactor not energizing
- Compressor electrically non-operational
- Defective fan cycling control
- Defective fan motor

Miscellaneous

- Non-Manitowoc components
- Improper refrigerant charge
- Defective head pressure control
- Defective harvest valve
- Defective compressor
- TXV starving or flooding (check bulb mounting)
- Non-condensible in refrigeration system
- Plugged or restricted high side refrigerant lines or component
- Restricted air flow/dirty condenser fins
- High inlet air temperature
- Condenser discharge air recirculation

SAFETY LIMIT #2

Firmware version 5.010 and higher

Harvest time exceeds 7 minutes for 3 consecutive harvest cycles.

Firmware version 5.09 and lower

Harvest time exceeds 3.5 minutes for 500 consecutive harvest cycles.

Possible Cause Checklist

Improper Installation

- Refer to "Installation/Visual Inspection Checklist" on page 136

Water System

- Water area (evaporator) dirty
- Dirty/defective water dump valve
- Vent tube not installed on water outlet drain
- Water freezing behind evaporator
- Plastic extrusions and gaskets not securely mounted to the evaporator
- Clogged water distribution tube

Electrical System

- Ice thickness probe out of adjustment
- Bin switch closed/defective
- Premature harvest - The control board initiates a harvest cycle when the high water level probe circuit is complete and the low water level probe is open.

Refrigeration System

- Non-Manitowoc components
- Improper refrigerant charge
- Defective head pressure control valve
- Defective harvest valve
- TXV flooding (check bulb mounting)
- Defective fan cycling control
- Water cooled only - Water regulating valve is incorrectly adjusted or will not close during harvest cycle.

Troubleshooting By Symptom

The troubleshooting procedures follow flow charts. There are four symptoms, the symptom that you are experiencing will determine which flow chart to use. The flow chart asks yes and no questions to determine the problem. The flow chart will direct you to a procedure to correct the problem. Remote condenser, and self contained models use separate charts.

SYMPTOM #1

Ice Machine Stops Running

Ice machine is in Ice Making cycle

or

Has a History of Shutting Down

- Refer to Ice Machine Stops Running Flow Chart

SYMPTOM #2

Ice Machine has a Long Freeze Cycle.

Ice Formation is Thick

or

Thin Ice Fill on Inlet or Outlet of Evaporator

or

Low Production

Safety Limit #1 (possible)

- Refer to Freeze Cycle Refrigeration System Operational Analysis Table

SYMPTOM #3

Ice Machine Will Not Harvest - Freeze Cycle is Normal and Ice Cubes are Not Melted After Harvest

Safety Limit #2 (possible)

- Refer to Refrigeration Harvest Flow Chart

SYMPTOM #4

Ice Machine Will Not Harvest - Freeze Cycle is Normal and Ice Cubes are Melted After Harvest

- Refer to Ice Meltout Flow Chart

RESET TO FACTORY DEFAULTS

Before starting troubleshooting procedures, reset the control board to factory defaults to prevent mis-diagnosis. Before resetting to factory defaults do one of the following:

A. Copy settings to a usb device and flash settings into the control board when diagnostics are complete.

B. Write down any customer settings so they can be re-entered when diagnostics are complete.

This procedure also resets the password to the factory default. The default factory password is 1234. To reset the ice machine to factory defaults refer to "Password Entry" on page 63.

SYMPTOM #1 ICE MACHINE WILL NOT RUN

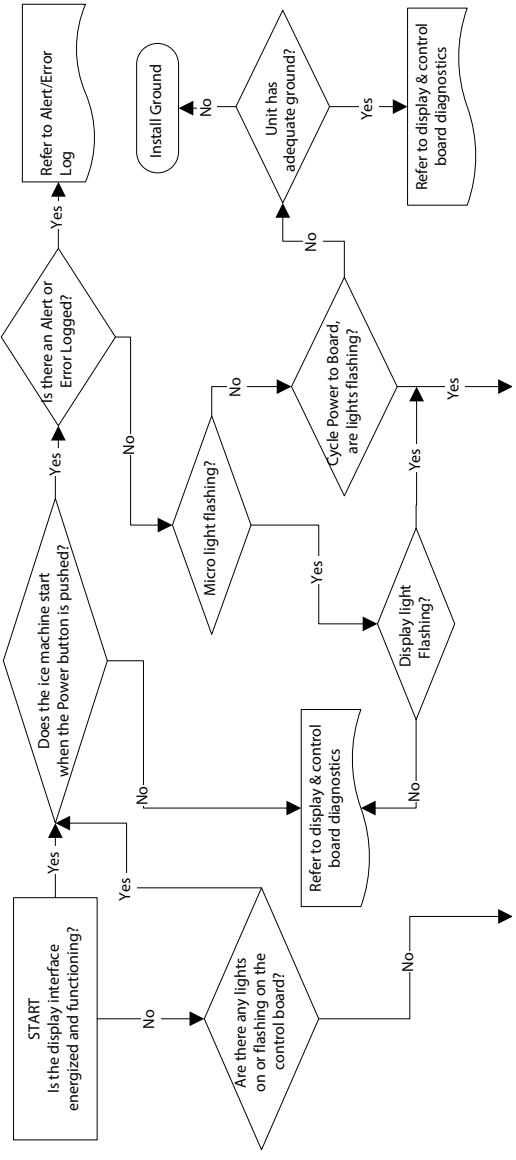

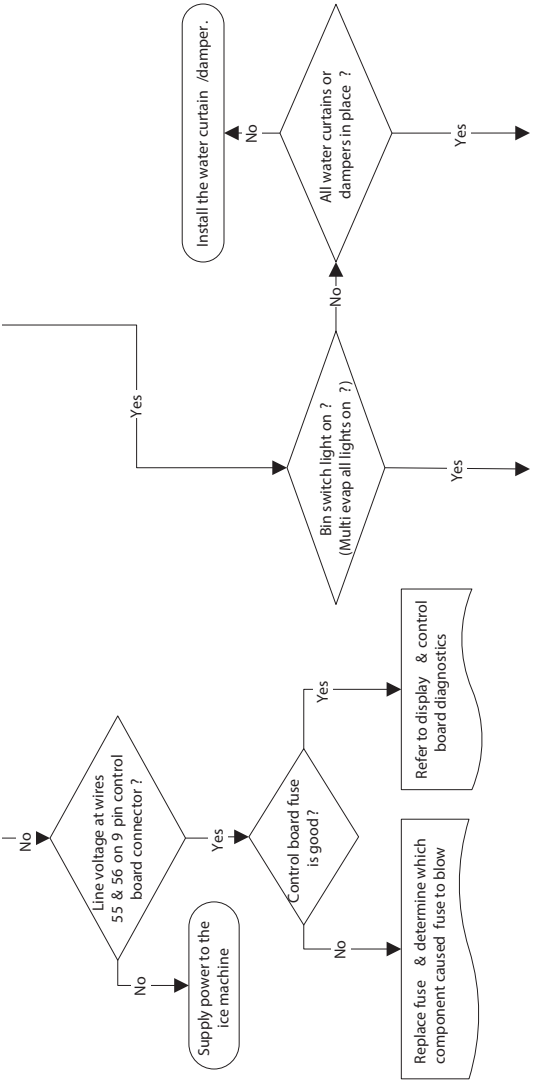
Line voltage at wires 55 & 56 on 9 pin control board connector ?
No
Supply power to the ice machine
Yes
Control board fuse is good ?
No
Replace fuse & determine which component caused fuse to blow
Yes
Refer to display & control board diagnostics
Bin switch light on ? (Multi evap all lights on ?)
Yes
No
All water curtains or dampers in place ?
No
Install the water curtain /damper.
Yes

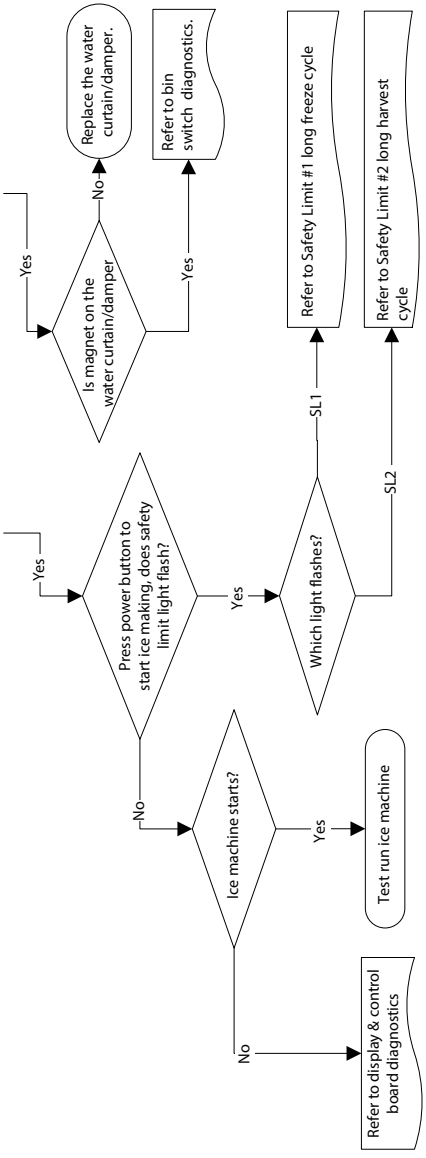
Yes
Is magnet on the water curtain/damper
No
Replace the water curtain/damper.
Yes
Refer to bin switch diagnostics.
Yes
Press power button to start ice making, does safety limit light flash?
Yes
Which light flashes?
SL1
Refer to Safety Limit #1 long freeze cycle
SL2
Refer to Safety Limit #2 long harvest cycle
No
Ice machine starts?
Yes
Test run ice machine
No
Refer to display & control board diagnostics

SYMPTOM #2 - LOW PRODUCTION, LONG FREEZE CYCLE

Ice Machine has a Long Freeze Cycle.

Ice Formation is Thick
or
Thin on Inlet or Outlet of Evaporator
or
Low Production

How to Use the Freeze Cycle Refrigeration System Operational Analysis Table

GENERAL

These tables must be used with charts, checklists and other references to eliminate refrigeration components not listed on the tables and external items and problems which can cause good refrigeration components to appear defective.

The tables list five different defects that may affect the ice machine's operation.

NOTE: A low-on-charge ice machine and a starving expansion valve have very similar characteristics and are listed under the same column.

NOTE: Before starting, see "Before Beginning Service" for a few questions to ask when talking to the ice machine owner.

PROCEDURE

Step 1 Complete the "Operation Analysis" column.

Read down the left "Operational Analysis" column. Perform all procedures and check all information listed. Each item in this column has supporting reference material to help analyze each step.

While analyzing each item separately, you may find an "external problem" causing a good refrigerant component to appear bad. Correct problems as they are found. If the operational problem is found, it is not necessary to complete the remaining procedures.

Step 2 Enter Checkmarks (√).

Each time the actual findings of an item in the "Operational Analysis" column matches the published findings on the table, enter a Checkmark.

Example: Freeze cycle suction pressure is determined to be low. Enter a Checkmark in the "low" column.

Step 3 Add the Checkmarks listed under each of the four columns. Note the column number with the highest total and proceed to "Final Analysis."

NOTE: If two columns have matching high numbers, a procedure was not performed properly, supporting material was not analyzed correctly or the problem component is not covered by the analysis table.

Before Beginning Service

Ice machines may experience operational problems only during certain times of the day or night. A machine may function properly while it is being serviced, but malfunctions later. Information provided by the user can help the technician start in the right direction, and may be a determining factor in the final diagnosis.

Ask these questions before beginning service:

- When does the ice machine malfunction? (night, day, all the time, only during the Freeze cycle, etc.)
- When do you notice low ice production? (one day a week, every day, on weekends, etc.)
- Can you describe exactly what the ice machine seems to be doing?
- Has anyone been working on the ice machine?
- During "store shutdown," is the circuit breaker, water supply or air temperature altered?
- Is there any reason why incoming water pressure might rise or drop substantially?

SYMPTOM #2 - FREEZE CYCLE REFRIGERATION SYSTEM OPERATIONAL ANALYSIS TABLES

SINGLE EVAPORATOR, SINGLE EXPANSION VALVE
SELF CONTAINED AIR, WATER & REMOTE CONDENSER

Operational Analysis	1	2	3	4
Ice Production Reference "Ice Production Check" on page 134	Air-Temperature Entering Condenser _____ Water Temperature Entering Ice Machine_____ Published 24 hour ice production _____ Calculated (actual) ice production_____ NOTE: The ice machine is operating properly if the ice fill patterns is normal and ice production is within 10% of charted capacity.			
Installation and Water System Reference "Water System Checklist" on page 137	All installation and water related problems must be corrected before proceeding with chart.			
Ice Formation Pattern Reference "Ice Formation Pattern" on page 138	Ice formation is extremely thin on outlet of evaporator -or- No ice formation on the entire evaporator	Ice formation is extremely thin on outlet of evaporator -or- No ice formation on entire evaporator	Ice formation normal -or- Ice formation is extremely thin on inlet of evaporator -or- No ice formation on entire evaporator	Ice formation normal -or- No ice formation on entire evaporator

SINGLE EVAPORATOR, SINGLE EXPANSION VALVE
SELF CONTAINED AIR, WATER & REMOTE CONDENSER

Operational Analysis	1	2	3	4
Freeze Cycle Discharge Pressure _____ _____ _____ **1 minute into cycle** **Middle** **End**	If discharge pressure is High or Low refer to freeze cycle high or low discharge pressure problem checklist page 143 to eliminate problems and/or components not listed on this table before proceeding.			
Freeze Cycle Suction Pressure _____ _____ _____ **1 minute** **Middle** **End**	If suction pressure is High or Low refer to freeze cycle high or low suction pressure problem checklist page 146 to eliminate problems and/or components not listed on this table before proceeding.			
	Suction pressure is **High**	Suction pressure is **Low or Normal**	Suction pressure is **High**	Suction pressure is **High**

SINGLE EVAPORATOR, SINGLE EXPANSION VALVE
SELF CONTAINED AIR, WATER & REMOTE CONDENSER

Operational Analysis	1	2	3	4
Wait 5 minutes into the freeze cycle. Compare temperatures of **evaporator inlet** and **evaporator outlet**. **Inlet T3**_____**° F (°C)** **Outlet T4**_____ **° F (°C)** **Difference** **T3 & T4**_____ **° F (°C)** Reference "Comparing Evaporator Inlet and Outlet Temperatures - Self-contained & Remote Condenser Single Expansion Valve Machines" on page 148	Inlet and outlet **within 7° F (4°C)** of each other	Inlet and outlet **not within 7° F (4°C)** of each other -and- Inlet is colder than outlet	Inlet and outlet **within 7°F (4°C)** of each other -or- Inlet and outlet **<u>not</u> within 7°F (4°C)** of each other -and- Inlet is warmer than outlet	Inlet and outlet **within 7°F (4°C)** of each other

SINGLE EVAPORATOR, SINGLE EXPANSION VALVE
SELF CONTAINED AIR, WATER & REMOTE CONDENSER

Operational Analysis	1	2	3	4
Wait 5 minutes into the freeze cycle. Compare temperatures of **compressor discharge line** and **harvest valve inlet.** Reference "Harvest Valve Analysis" on page 149	The harvest valve inlet is **Hot** -and- approaches the temperature of a **Hot** compressor discharge line.	The harvest valve inlet is **Cool** enough to hold hand on -and- the compressor discharge line is **Hot**.	The harvest valve inlet is **Cool** enough to hold hand on -and- the compressor discharge line is **Cool** enough to hold hand on.	The harvest valve inlet is **Cool** enough to hold hand on -and- the compressor discharge line is **Hot**.
Discharge Line Temperature Record freeze cycle discharge line temperature at the end of the freeze cycle **T2 _____°F (°C)** Reference "Discharge Line Temperature Analysis" on page 151	Discharge line temp. **150°F (65°C) or higher** at the end of the freeze cycle	Discharge line temp. **150°F (65°C) or higher** at the end of the freeze cycle	Discharge line temp. **less than 150°F (65°C)** at the end of the freeze cycle	Discharge line temp. **150°F (65°C) or higher** at the end of the freeze cycle

SINGLE EVAPORATOR, SINGLE EXPANSION VALVE
SELF CONTAINED AIR, WATER & REMOTE CONDENSER

Operational Analysis	1	2	3	4
Final Analysis Enter total number of boxes checked in each column. Reference "Final Analysis - Self-contained Air, Water & Remote Condenser Models" on page 153	**Harvest Valve Leaking**	**Low On Charge -Or- TXV Starving**	**TXV Flooding**	**Compressor**

The following are the procedures for completing each step of the Freeze Cycle Refrigeration System Operational Analysis Tables. Each procedure must be performed exactly for the table to work correctly.

SINGLE EVAPORATOR, DUAL EXPANSION VALVE
SELF CONTAINED AIR, WATER & REMOTE CONDENSER

Operational Analysis	1	2	3	4
Ice Production	Air-Temperature Entering Condenser _____ Water Temperature Entering Ice Machine_____ Published 24 hour ice production _____ Calculated (actual) ice production_____ NOTE: The ice machine is operating properly if the ice fill patterns is normal and ice production is within 10% of charted capacity.			
Installation and Water System	All installation and water related problems must be corrected before proceeding with table.			
Ice Formation Pattern **Top or 1 Side**_____ **Bottom or 1 Side**_____	Ice formation is extremely thin on outlet of evaporator -or- No ice formation on one side or Top or Bottom of evaporator	Ice formation is extremely thin on outlet of one side or Top or Bottom of evaporator -or- No ice formation on entire evaporator	Ice formation normal -or- Ice formation is extremely thin at inlet of one side or Top or Bottom of evaporatorr -or- No ice formation on entire evaporator	Ice formation normal -or- No ice formation on entire evaporator

SINGLE EVAPORATOR, DUAL EXPANSION VALVE
SELF CONTAINED AIR, WATER & REMOTE CONDENSER

Operational Analysis	1	2	3	4
Freeze Cycle Discharge Pressure _____ _____ _____ **1 minute into cycle** **Middle** **End**	If discharge pressure is High or Low refer to freeze cycle high or low discharge pressure problem checklist page 143 to eliminate problems and/or components not listed on this table before proceeding.			
Freeze Cycle Suction Pressure _____ _____ _____ **1 minute** **Middle** **End**	If suction pressure is High or Low refer to freeze cycle high or low suction pressure problem checklist page 146 to eliminate problems and/or components not listed on this table before proceeding.			
	Suction pressure is **High**	Suction pressure is **Low or Normal**	Suction pressure is **High**	Suction pressure is **High**
Wait 5 minutes into the freeze cycle. Compare temperatures of **compressor discharge line and both harvest valve inlets.**	The harvest valve inlet is **Hot** -and- approaches the temperature of a **Hot** compressor discharge line.	The harvest valve inlet is **Cool** enough to hold hand on -and- the compressor discharge line is **Hot**.	The harvest valve inlet is **Cool** enough to hold hand on -and- the compressor discharge line is **Cool** enough to hold hand on.	The harvest valve inlet is **Cool** enough to hold hand on -and- the compressor discharge line is **Hot**.

SINGLE EVAPORATOR, DUAL EXPANSION VALVE
SELF CONTAINED AIR, WATER & REMOTE CONDENSER

Operational Analysis	1	2	3	4
Discharge Line Temperature Record freeze cycle discharge line temperature at the end of the freeze cycle _____**°F (°C)**	Discharge line temp. **150°F (65°C) or higher** at the end of the freeze cycle	Discharge line temp. **150°F (65°C) or higher** at the end of the freeze cycle	Discharge line temp. **less than 150°F (65°C)** at the end of the freeze cycle	Discharge line temp. **150°F (65°C) or higher** at the end of the freeze cycle
Final Analysis Enter total number of boxes checked in each column.	**Harvest Valve Leaking**	**Low On Charge -Or- TXV Starving**	**TXV Flooding**	**Compressor**

Ice Production Check

The amount of ice a machine produces directly relates to the operating water and air temperatures. This means a condensing unit with a 70°F (21°C) outdoor ambient temperature and 50°F (10°C) water produces more ice than the same model condensing unit with a 90°F (32°C) outdoor ambient temperature and 70°F (21°C) water.

1. Determine the ice machine operating conditions:
   Air temp entering condenser:____°
   Air temp around ice machine:____°
   Water temp entering sump trough:____°
2. Refer to the appropriate 24-Hour Ice Production Chart (starting on page 225). Use the operating conditions determined in step 1 to find published 24-Hour Ice Production:_____
   - Times are in minutes.
     Example: 1 min. 15 sec. converts to 1.25 min.
     (15 seconds ÷ 60 seconds = .25 minutes)
   - Weights are in pounds.
     Example: 2 lb. 6 oz. converts to 2.375 lb.
     (6 oz. ÷ 16 oz. = .375 lb.)
3. Perform an ice production check using the formula below.

1.	_____	+	_____	=	_____
	Freeze Time		Harvest Time		Total Cycle Time
2.	1440	÷	_____	=	_____
	Minutes in 24 Hrs.		Total Cycle Time		Cycles per Day
3.	_____	x	_____	=	_____
	Weight of One Harvest		Cycles per Day		Actual 24-Hour Production

Weighing the ice is the only 100% accurate check. However, if the ice pattern is normal and the 1/8 in. thickness is maintained, the ice slab weights listed with the 24-Hour Ice Production Charts may be used.

4. Compare the results of step 3 with step 2. Ice production checks that are within 10% of the chart are considered normal. If they match closely, determine if:
   - Another ice machine is required.
   - More storage capacity is required.
   - Relocating the existing equipment to lower the load conditions is required.

Contact the local Manitowoc Distributor for information on available options and accessories.

Installation/Visual Inspection Checklist

Inadequate Clearances

- Check all clearances on sides, back and top. Reference "Clearance Requirements" on page 23

Ice machine is not level

- Level the ice machine

Condenser is dirty

- Clean the condenser

Water filtration is plugged (if used)

- Install a new water filter

Water drains are not run separately and/or are not vented

- Run and vent drains according to the Installation Manual

Line set is improperly installed

- Reinstall according to the Installation Manual Reference "Lineset Applications" on page 26

Water System Checklist

A water-related problem often causes the same symptoms as a refrigeration system component malfunction.

Water system problems must be identified and eliminated prior to replacing refrigeration components.

Water area (evaporator) is dirty

- Clean as needed

Water inlet pressure not between 20 and 80 psig (1-5 Bar, 138-552 kPa).

- Install water regulator or increase water pressure

Incoming water temperature is not between 35°F (2°C) and 90°F (32°C)

- If too hot, check the hot water line check valves in other store equipment

Water filtration is plugged (if used)

- Install a new water filter

Water dump valve leaking during the Freeze cycle

- Clean/replace dump valve as needed

Vent tube is not installed on water outlet drain

- See Installation Instructions

Hoses, fittings, etc., are leaking water

- Repair/replace as needed

Water fill valve is stuck open or closed

- Clean/replace as needed

Water is leaking out of the sump trough area

- Stop the water loss

Uneven water flow across the evaporator

- Clean the ice machine

Plastic extrusions and gaskets are not secured to the evaporator

- Remount/replace as needed

Ice Formation Pattern

Evaporator ice formation pattern analysis is helpful in ice machine diagnostics.

Analyzing the ice formation pattern alone cannot diagnose an ice machine malfunction. However, when this analysis is used along with Manitowoc's Freeze Cycle Refrigeration System Operational Analysis Tables, it can help diagnose an ice machine malfunction.

Any number of problems can cause improper ice formation.

Keep the water curtain/ice dampers in place while checking the ice formation pattern to ensure no water is lost.

1. Normal Ice Formation

Ice forms across the entire evaporator surface.

At the beginning of the Freeze cycle, it may appear that more ice is forming on the inlet of the evaporator than on the outlet. At the end of the Freeze cycle, ice formation at the outlet will be close to, or just a bit thinner than, ice formation at the inlet. The dimples in the cubes at the outlet of the evaporator may be more pronounced than those on the inlet. This is normal.

It is normal for ice thickness to vary up to 1/16" across the surface of the evaporator. The ice bridge thickness at the ice thickness control probe should be at least 1/8".

The ice thickness probe must be set to maintain the ice bridge thickness at approximately 1/8 in. If ice forms uniformly across the evaporator surface, but does not reach 1/8 in. in the proper amount of time, this is still considered a normal ice fill pattern.

2. **Extremely Thin at Evaporator Outlet**

There is no ice, or a considerable lack of ice formation, at the outlet of the evaporator.

Examples: No ice at all on the outlet half of the evaporator, but ice forms on the inlet half of the evaporator. Or, the ice at the outlet of the evaporator reaches 1/8 in. to initiate a harvest, but the inlet of the evaporator already has 1/2 in. to 1 in. of ice formation.

3. **Extremely Thin at Evaporator Inlet**

There is no ice, or a considerable lack of ice formation at the inlet of the evaporator. Examples: The ice at the outlet of the evaporator reaches 1/8 in. to initiate a harvest, but there is no ice formation at all on the inlet of the evaporator.

4. **No Ice Formation**

The ice machine operates for an extended period, but there is no ice formation at all on the evaporator.

Evaporator Tubing Routing

Routing of the tubing on the back of the evaporator determines the ice fill pattern failure mode.

One Evaporator, One TXV models

The evaporator outlet tubing does not exit directly at the top of the evaporator, but exits several inches below the top of the evaporator. Extremely Thin at the Evaporator Outlet will first be visible several inches below the top of the evaporator. Extremely Thin at Evaporator Inlet will first be visible at the bottom of the evaporator.

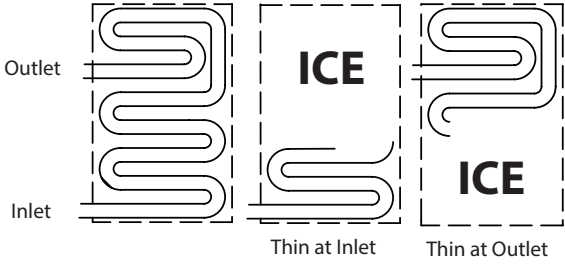

One Evaporator, Two TXV 30" Models

Tubing routing for one evaporator with two TXV's is different. The evaporator has two inlets and outlets. Fill pattern varies depending on which circuit is affected,

Extremely Thin at the Evaporator Outlet will first be visible either 1/4 or 3/4 of the way down the evaporator.

Extremely Thin at the Evaporator Inlet will show at the bottom of the evaporator or 1/2 of the way down depending on the circuit affected.

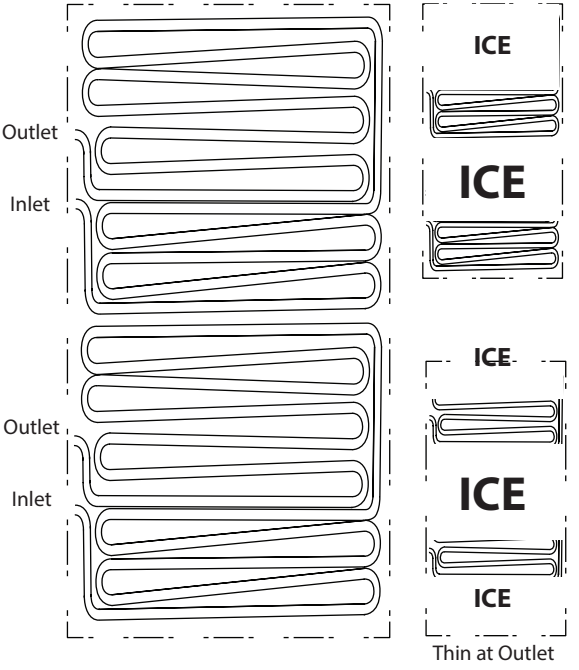

One Evaporator, Two TXV 48" Models

Tubing routing for one evaporator with two TXV's is different. The evaporator has two inlets and outlets. Fill pattern varies depending on which circuit is affected,

Extremely Thin at the Evaporator Outlet will first be visible 1/3 of the way down the evaporator. Only one side of the evaporator may be affected depending on failure. A TXV failure will usually show on only one side, while low on refrigerant can affect one or both sides depending on the amount of refrigerant loss and ambient temperature.

Extremely Thin at the Evaporator Inlet will show at the bottom of the evaporator. Depending on the failure either the entire bottom of the evaporator or one side of the bottom of the evaporator may be affected.

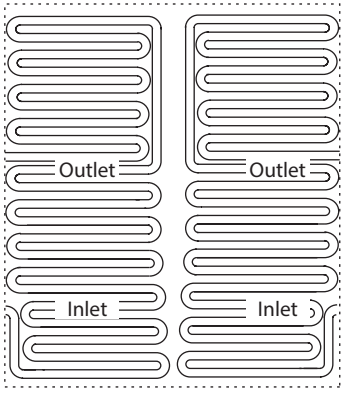

Thin at Inlet

Thin at Outlet

Analyzing Discharge Pressure in the Freeze Cycle

1. Determine the ice machine operating conditions:
   Air temp. entering condenser _____
   Air temp. around ice machine _____
   Water temp. entering sump trough _____

2. Refer to Operating Pressure table (starting on page 225) for ice machine being checked.

   Use the operating conditions determined in step 1 to find the published normal discharge pressures.
   Freeze Cycle _____
   Harvest Cycle _____

3. Perform an actual discharge pressure check.

	Freeze Cycle psig (kPa)
1 Minute into the Freeze Cycle	_____
Middle of Freeze Cycle	_____
End of Freeze Cycle	_____

4. Compare the actual discharge pressure (step 3) with the published discharge pressure (step 2).

   The discharge pressure is normal when the actual pressure falls within the published pressure range for the ice machine's operating conditions. It is normal for the discharge pressure to be higher at the beginning of the Freeze cycle (when load is greatest), then drop throughout the Freeze cycle.

Freeze Cycle Discharge Pressure High Checklist

Improper Installation

- Refer to "Installation/Visual Inspection Checklist" on page 136

Air Condenser

- Dirty condenser filter
- Dirty condenser fins
- High inlet air temperature
- Condenser discharge air recirculation
- Defective fan cycling control
- Defective fan motor
- Defective head pressure control valve {Remote}

Water Condenser

- Low water pressure [20 psig (138 kPa) min.]
- High inlet water temperature (90°F/32°C max.)
- Dirty condenser
- Dirty/Defective water regulating valve
- Water regulating valve out of adjustment

Other

- Overcharged
- Non-condensable (air) in system
- Wrong type of refrigerant
- Non-Manitowoc components in system
- High side refrigerant lines/component restricted

Freeze Cycle Discharge Pressure Low Checklist

Improper Installation

- Refer to "Installation/Visual Inspection Checklist" on page 136

Air Cooled Condensers

- Defective head pressure control valve, won't bypass "Head Pressure Control Valve" on page 197
- Defective fan cycle control, stuck closed "Fan Cycle Control" on page 187

Water Cooled Condensers

- Water Regulating Valve out of adjustment
- Water Regulating Valve Defective

Other

- Undercharged
- Wrong type of refrigerant
- Non-Manitowoc components in system
- Liquid line/component restricted

Analyzing Suction Pressure

The suction pressure gradually drops throughout the freeze cycle. The actual suction pressure (and drop rate) changes as the air and water temperature entering the ice machine changes. These variables also determine the freeze cycle times.

To analyze and identify the proper suction pressure drop throughout the freeze cycle, compare the published suction pressure to the published freeze cycle time.

NOTE: Analyze discharge pressure before analyzing suction pressure. High or low discharge pressure may be causing high or low suction pressure.

1. Determine the ice machine operating conditions:
   Air temp. entering condenser _____
   Air temp. around ice machine _____
   Water temp. entering sump trough _____
2. Refer to Operating Pressure table (starting on page 226) for ice machine being checked.

   Use the operating conditions determined in step 1 to find the published normal discharge pressures.
   Freeze Cycle _____
   Harvest Cycle _____
3. Perform an actual suction pressure check.

	Freeze Cycle psig (kPa)
1 Minute into the Freeze Cycle	_____
Middle of Freeze Cycle	_____
End of Freeze Cycle	_____

4. Compare the actual suction pressure (step 3) with the published suction pressure (step 2).

   NOTE: The suction pressure is normal when the actual pressure falls within the published pressure range for the ice machine's operating conditions. It is normal for the suction pressure to be higher at the beginning of the Freeze cycle (when load is greatest), then drop throughout the Freeze cycle.

Suction Pressure High Checklist

Improper Installation

- Refer to "Installation/Visual Inspection Checklist" on page 136

Discharge Pressure

- Discharge pressure is too high and is affecting suction pressure – refer to "Freeze Cycle Discharge Pressure High Checklist" on page 143

Improper Refrigerant Charge

- Overcharged (also see "Freeze Cycle Discharge Pressure High Checklist" on page 143)
- Wrong type of refrigerant
- Non condensable in system

Components

- Harvest valve leaking
- Harvest pressure solenoid valve leaking
- TXV flooding
- Defective compressor

Other

- Non-Manitowoc components in system

Suction Pressure Low Checklist

Improper Installation

- Refer to "Installation/Visual Inspection Checklist" on page 136

Discharge Pressure

- Discharge pressure is too low and is affecting low side – refer to "Freeze Cycle Discharge Pressure Low Checklist" on page 144

Improper Refrigerant Charge

- Undercharged
- Wrong type of refrigerant

Other

- Non-Manitowoc components in system
- Improper water supply over evaporator – refer to "Water System Checklist" on page 137
- Restricted/plugged liquid line drier
- Restricted/plugged tubing in suction side or liquid line of refrigeration system
- TXV starving

Comparing Evaporator Inlet and Outlet Temperatures - Self-contained & Remote Condenser Single Expansion Valve Machines

The temperatures of the suction lines entering and leaving the evaporator alone cannot diagnose an ice machine. However, comparing these temperatures during the freeze cycle, along with using Manitowoc's Freeze Cycle Refrigeration System Operational Analysis Table, can help diagnose an ice machine malfunction.

The actual temperatures entering and leaving the evaporator vary by model, and change throughout the freeze cycle. This makes documenting the "normal" inlet and outlet temperature readings difficult. The key to the diagnosis lies in the difference between the two temperatures five minutes into the freeze cycle. These temperatures should be within 7° of each other.

Use this procedure to document freeze cycle inlet and outlet temperatures.

1. Navigate to Service / Real Time Data / Time & Temp / T3 & T4 Thermistors (See "Service Menu" on page 79 for details).
2. Wait five minutes into the freeze cycle.
3. Record the evaporator inlet (T3) and outlet (T4) temperatures at 5 minutes into the freeze cycle. Determine the difference.
4. Record the information on the table.

Harvest Valve Analysis

Symptoms of a harvest valve remaining partially open during the freeze cycle can be similar to symptoms of either an expansion valve or compressor problem. The best way to diagnose a harvest valve is by using Manitowoc's Ice Machine Freeze Cycle Refrigeration System Operational Analysis Table.

Use the following procedures to determine if a harvest valve is remaining partially open during the freeze cycle.

SELF-CONTAINED OR REMOTE CONDENSER MODELS HARVEST VALVE ANALYSIS

1. Wait five minutes into the freeze cycle.
2. Feel the inlet of the harvest valve(s).

Important

Feeling the harvest valve outlet or across the harvest valve itself will not work for this comparison.

The harvest valve outlet is on the suction side (cool refrigerant). It may be cool enough to touch even if the valve is leaking.

3. Feel the compressor discharge line.
4. Compare the temperature of the inlet of the harvest valves to the temperature of the compressor discharge line.

⚠ Warning

The inlet of the harvest valve and the compressor discharge line could be hot enough to burn your hand. Just touch them momentarily.

Findings	Comments
The inlet of the harvest valve is cool enough to touch and the compressor discharge line is hot. **Cool & Hot**	**Normal Operation** This is normal as the discharge line should always be too hot to touch and the harvest valve inlet, although too hot to touch during harvest, should be cool enough to touch after 5 minutes into the freeze cycle.
The inlet of the harvest valve is hot and approaches the temperature of a hot compressor discharge line. **Hot & Hot**	**Leaking Harvest Valve** The harvest valve inlet did not cool down during the freeze cycle due to continual leakage of compressor discharge gas through the valve.
Both the inlet of the harvest valve and the compressor discharge line are cool enough to touch. **Cool & Cool**	**Harvest Valve Not Leaking** The compressor discharge line should not be cool to the touch 5 minutes into the freeze cycle. This symptom would not be caused by a harvest valve leaking.

5. Record your findings on the table.

Discharge Line Temperature Analysis

GENERAL

Knowing if the discharge line temperature is increasing, decreasing or remaining constant can be an important diagnostic tool. Compressor discharge line temperature on a normally operating ice machine steadily increases throughout the freeze cycle.

Ambient air temperatures affect the discharge line temperature.

Higher ambient air temperatures at the condenser and/ or higher inlet water temperature = higher discharge line temperatures at the compressor.

Lower ambient air temperatures at the condenser and/ or lower supply water temperature= lower discharge line temperatures at the compressor.

Regardless of ambient and water temperatures, the freeze cycle discharge line temperature will be higher than 150°F (66°C) at the end of the freeze cycle.

PROCEDURE

1. Navigate to Service / Real Time Data / Time & Temp / T2 Thermistor (See page 80 Service Menu Navigation for details).
2. Observe the discharge line temperature (T2) for the last three minutes of the freeze cycle and record on the table.

Water Regulating Valve

Problem (Freeze Cycle)

Valve not maintaining discharge pressure.

- Valve incorrectly set, dirty or defective. Adjust valve to correct discharge pressure for your model (refer to cycle times/24 hour productions charts), clean or replace valve.

Discharge pressure extremely high; Liquid line entering receiver feels hot.

- Water regulating valve incorrectly set or not opening
- Insufficient water volume - undersized/kinked lines, mineral or scale buildup in lines. Verify Head Pressure Control Valve operation before changing water regulating valve.

Discharge pressure low, Liquid line entering receiver feels warm to hot.

- Ice machine low on charge. Verify "Total System Refrigerant Charge" on page 222.

Water cooled unit requires high pressure water regulating valve.

- Water pressure forces water regulating valve open.

Final Analysis - Self-contained Air, Water & Remote Condenser Models

The column with the highest number of Checkmarks identifies the refrigeration problem.

COLUMN 1 - HARVEST VALVE LEAKING

Replace the valve as required.

COLUMN 2 - LOW CHARGE/TXV STARVING

Normally, a starving expansion valve only affects the freeze cycle pressures, not the harvest cycle pressures. A low refrigerant charge normally affects both pressures. Verify the ice machine is not low on charge before replacing an expansion valve.

1. Add refrigerant charge to verify a low charge (air and water self-contained only). Do not add more than 30% of nameplate refrigerant charge. If the problem is corrected, the ice machine is low on charge.

   *Do not add charge to remote models. The symptoms of a remote low on charge will result in a safety limit #1 in cool ambient temperatures. Check the liquid line temperature at the ice machine. The liquid line will be hot with a normal or below normal head pressure in freeze when the ice machine is low on refrigerant.

2. Find the refrigerant leak. The ice machine must operate with the nameplate charge. If the leak cannot be found, proper refrigerant procedures must still be followed Change the liquid line drier. Then, evacuate and weigh in the proper charge.

3. If the problem is not corrected by adding charge, the expansion valve is faulty.

COLUMN 3 - TXV FLOODING OR REFRIGERANT OVERCHARGE

A loose or improperly mounted expansion valve bulb causes the expansion valve to flood. Check bulb mounting, insulation, etc., before changing the valve. Verify refrigerant amount is correct by weighing recovered refrigerant before replacing a TXV.

COLUMN 4 - COMPRESSOR

Replace the compressor. To receive warranty credit, the compressor ports must be properly sealed by crimping and soldering them closed.

SYMPTOM #3 & #4 HARVEST PROBLEMS SELF-CONTAINED AIR, WATER & REMOTE CONDENSER MODELS

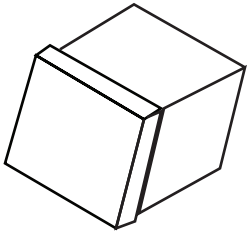

Normal Ice Cube

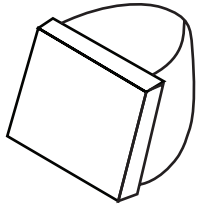

Melted Out ice Cube

Definition of a harvest problem; At the end of a 3.5 minute harvest cycle the slab of ice is still contacting the evaporator. The slab of ice may or may not be removable by hand.

Harvest problems can be split into two symptoms.

- Symptom 3 - Normal sheet of cubes at the end of the harvest cycle. Ice is difficult to remove from the evaporator by hand. Once removed the back of the cubes are square and show no signs of melting. This indicates a refrigeration problem. The source of the problem could be in the freeze or harvest cycle. Use the appropriate flow chart (in Troubleshooting) to determine the cause of the problem.
- Symptom 4 - Melted sheet of cubes at the end of the harvest cycle. Ice can be removed rather easily by hand. The back of the cubes are misshapen and melted. This indicates something is preventing the ice slab from releasing. Follow the appropriate flow chart (in Troubleshooting) to determine the cause of the problem. A manual cleaning procedure must always be performed when this problem is encountered.

SYMPTOM #3 SELF-CONTAINED AIR OR WATER-COOLED

Ice Machine Will Not Harvest - Freeze Cycle is Normal and Ice Cubes are Not Melted After Harvest

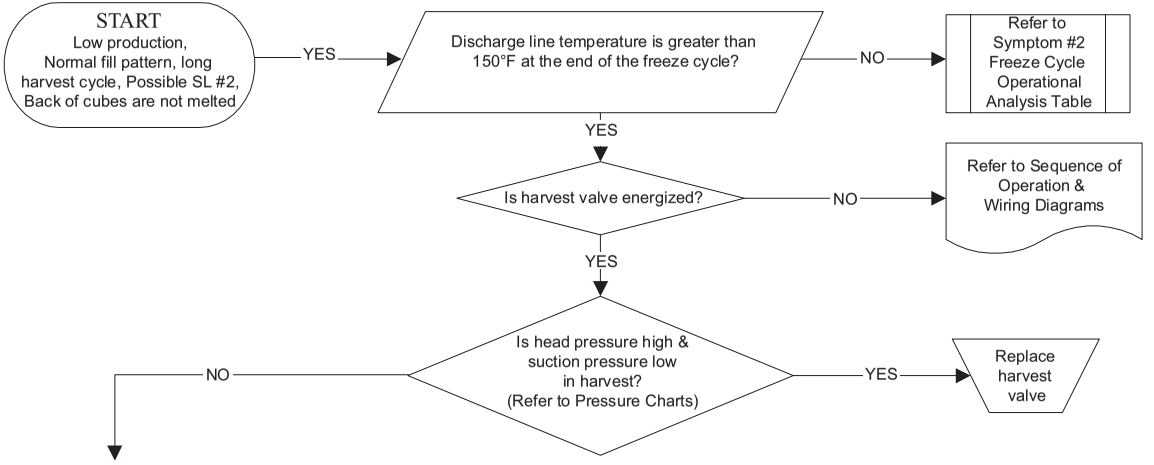

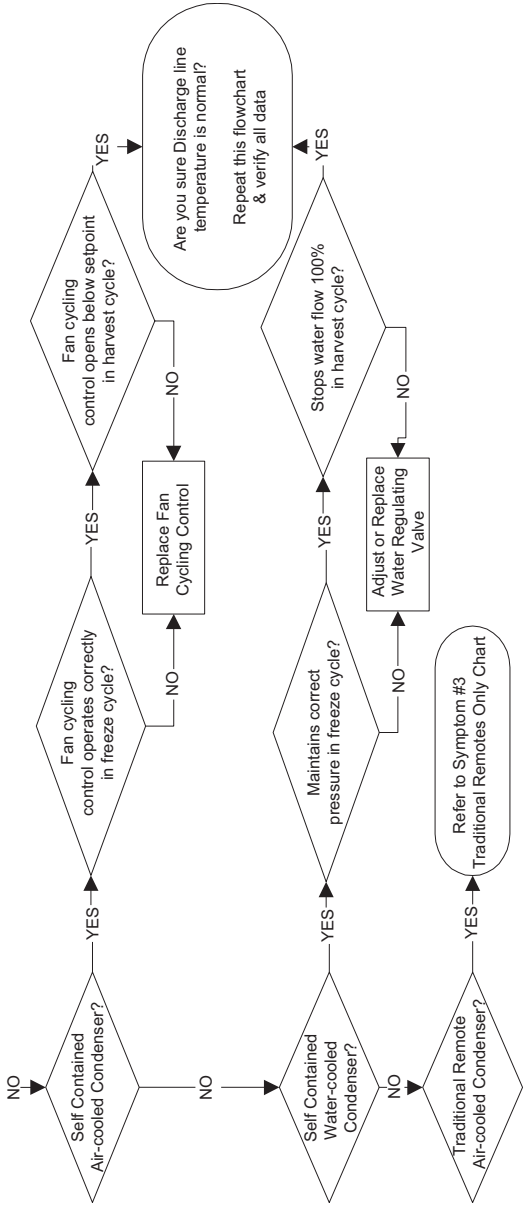
Self Contained Air-cooled Condenser?
NO
YES
Fan cycling control operates correctly in freeze cycle?
NO
YES
Replace Fan Cycling Control
Fan cycling control opens below setpoint in harvest cycle?
NO
YES
Are you sure Discharge line temperature is normal?
Repeat this flowchart & verify all data
Self Contained Water-cooled Condenser?
NO
YES
Maintains correct pressure in freeze cycle?
NO
YES
Adjust or Replace Water Regulating Valve
Stops water flow 100% in harvest cycle?
NO
YES
Traditional Remote Air-cooled Condenser?
NO
YES
Refer to Symptom #3 Traditional Remotes Only Chart

SYMPTOM #3 - REMOTE CONDENSER

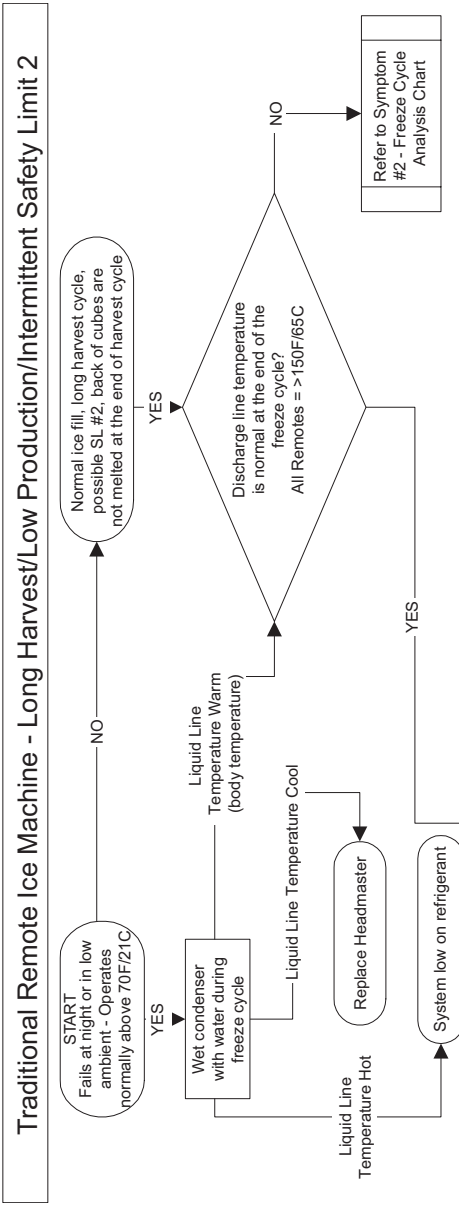

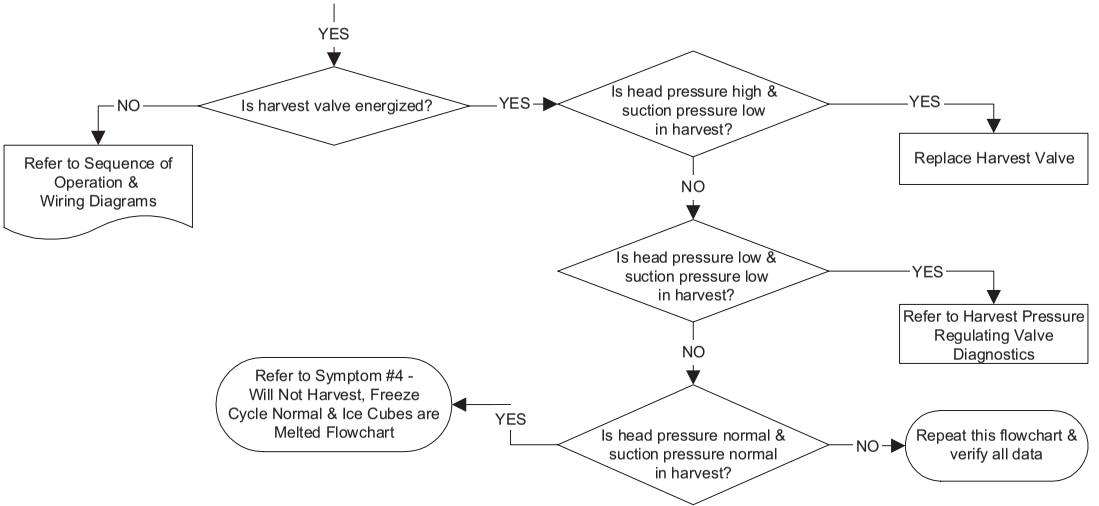

Single Evaporator Systems with Dual Harvest Valves: If one Harvest Vavle is open and the other is restricted / stuck closed you may have normal harvest pressures. Look for ice not melting on one side of the evaporator.

SYMPTOM #4 SELF-CONTAINED AIR, WATER-COOLED OR REMOTE

Ice Machine Will Not Harvest - Freeze Cycle is Normal and Ice Cubes are Melted After Harvest

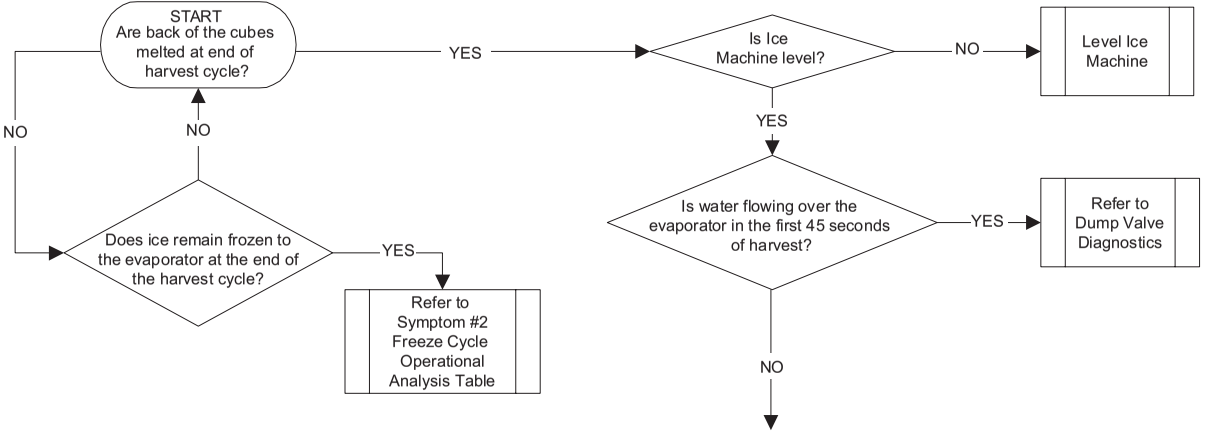

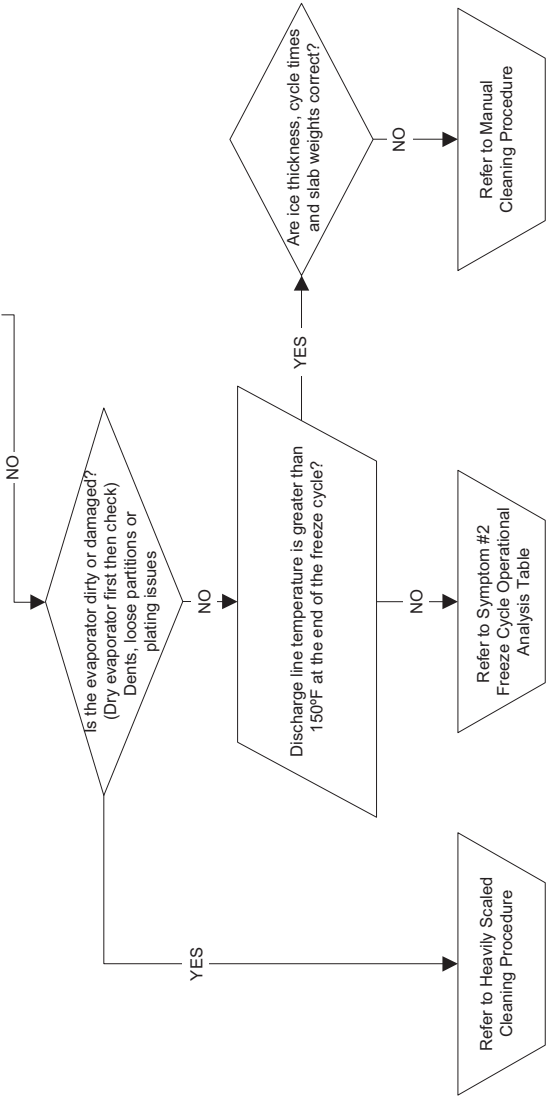
NO
Is the evaporator dirty or damaged?
(Dry evaporator first then check)
Dents, loose partitions or
plating issues
YES
Refer to Heavily Scaled
Cleaning Procedure
NO
Discharge line temperature is greater than
150ºF at the end of the freeze cycle?
NO
Refer to Symptom #2
Freeze Cycle Operational
Analysis Table
YES
Are ice thickness, cycle times
and slab weights correct?
NO
Refer to Manual
Cleaning Procedure

THIS PAGE INTENTIONALLY LEFT BLANK

Electrical Components

CONTROL BOARD, DISPLAY BOARD AND TOUCH PAD

FUNCTION

The control board, display board and touch pad provide user input and control the ice machine sequence of operation.

NOTE: Anytime power is supplied to wires #55 & #56 on the control board, the "Display" and "Micro" lights should flash like a heartbeat. The two green lights are located on the top right corner of the control board.

Display Diagnostics

Symptom - Micro light flashes and display light is off.

1. Disconnect both ends of the communication cable running between the control board and the back of the display module and inspect for bent or damaged pins. Reconnect after inspection.
2. Reboot ice machine by disconnecting power for a minimum of 15 seconds, reapplying power and checking micro light for normal flashing.
3. Press the power button on the display and watch the green Display light on the control board.
   A. Display light flashes- Test run ice machine.
   B. Display light is off - Replace communication cable first as a test, then replace display/touch pad assembly if required.

Control Board Diagnostics

1. Micro light is not flashing a heartbeat.
2. Disconnect line voltage power supply to the ice machine and wait a minimum of 15 seconds, then reapply power.
   A. Micro light flashes - continue with step 3.
   B. Micro light is off - Replace control board.
3. Perform the following keystrokes on the display.

- Press Menu, scroll down to Service and press right arrow
- Scroll down to Diagnostics and press right arrow
- Display reads Control Board, press right arrow
- Display reads Self Check, press right arrow to start control board test

The control board performs a self test. As the test progresses the display will show Checkmarks at the top left of the display screen. When the fifth Checkmark appears the display will show "Status Failed" or "Status Passed".

- Status passed -The control board is functioning normally, continue with touch pad diagnostics on next page.
- Status failed - Replace control board.

Touch Pad Diagnostics

Follow the control board diagnostics to "Status Passed". Perform the following keystrokes on the display.

- Display reads Status Passed, press the right arrow
- Display reads Pass Yes, press the right arrow
- Display reads Key Pad Test, press the right arrow

4. Test the functionality of all buttons on the touch pad.

NOTE: Pushing the power button will start and stop the ice machine. Testing it last will allow the ice machine to continue running a freeze cycle.

- As you press the buttons the first letter of the corresponding word will flash indicating the push button is operating correctly or the corresponding arrow or zero will flash.
- Press the right arrow 5 times rapidly to exit.

CONTROL BOARD RELAY TEST

The control board can be set to energize all relays for 3.5 minutes. This allows testing to verify control board relays are closed and line voltage is available for ice machine components - Water pump, dump valve, water inlet valve, harvest valve(s), air compressor(s), contactor/compressor/ fan motor - The fan cycle control must close to energize the fan motor.

1. Press power button to turn off ice machine.
2. Perform the following keystrokes on the display.

- Press Menu, scroll down to Service and press the right arrow
- Scroll down to Diagnostics, press the right arrow and select Diagnostics
- Display reads Control Board, press right arrow
- Scroll down to enbl relays and press right arrow to start control board test

3. The control board will energize all relays and the red light next to the relay. The red light indicates the relay coil is energized.
4. Test for line voltage at the individual components.
   A. Line voltage is present and the component is non functional - Replace component
   B. Voltage is not present at the component - Proceed to step 5
5. Refer to wiring diagram and determine wire location on the 9 pin molex connector for the component you are testing.
6. Check for line voltage at the control board 9 pin molex connector.
   A. Line voltage at 9 pin connector - Repair wiring to component
   B. No power at 9 pin connector - Replace control board

PROGRAMMING A REPLACEMENT CONTROL BOARD

Indigo™ replacement control boards require the Model number to be entered to activate the appropriate look up tables for operation and diagnostic. This can be done two different ways, USB Setup or Manual Setup.

USB Setup - Applicable when the control board is operational and has a mechanical issue such as a sticking relay. The asset data is transferred to the replacement control board from the faulty control board. Refer to page 96 "Exporting Data To A Flash Drive" before installing the replacement board.

Manual Setup - Applicable when the control board is non-operational or data from the faulty board is suspect.

Install replacement control board and reapply power.

- G series (blue) control boards will go directly to the Replacement Control Board screen and pause for input - Select either "Manual" or "USB" setup option.
- E series (green) control boards require navigation to the Replacement Control Board (Repl Cntl Bd) screen.

1. Press the Menu button.
2. Press the Down arrow until Service is highlighted, then press the Checkmark.
3. Scroll down to Replacement Control Board and press the Checkmark.
4. Select "Manual Setup" and press the Checkmark.

Verify the date correctly auto populates.

- Yes - Go to step 5
- No - Press the right arrow to activate the cursor, then use up/down arrows to enter the correct date.

5. Scroll down until brackets are in the space below "Input Model #". Press the right arrow to activate the blinking cursor, then use the up/down arrows to select the first character in the model number. Use the right arrow to move to the next space. Add characters in this manner until the model number is complete. The model must include the dash and the last three numbers to indicate the electrical requirements (example -261). Press the right arrow until the cursor disappears.

NOTE: Do not add any letters after the electrical requirements or the control board will not accept the model number.

6. Scroll down until brackets are in the space below "Input Serial#". Press the right arrow to activate the blinking cursor, then use the up/down arrows to select the first character in the serial number. Use the right arrow to move to the next space. Add characters in this manner until the serial number is complete. Press the right arrow until the cursor disappears.
7. Scroll down and select exit, then press checkmark.
8. Reboot ice machine by disconnecting power for a minimum of 15 seconds, then reapply power.

MAIN FUSE

FUNCTION

The control board fuse stops ice machine operation if electrical components fail, causing high amp draw.

SPECIFICATIONS

The main fuse is 250 Volt, 8 amp.

⚠ Warning

High (line) voltage is applied to the control board (terminals #55 and #56) at all times. Removing the control board fuse or pressing the On/Off button will not remove the power supplied to the control board.

CHECK PROCEDURE

1. If the display is energized or the bin switch light is on with the water curtain/ice dampers closed, the fuse is good.

⚠ Warning

Disconnect electrical power to the entire ice machine before proceeding.

2. Remove the fuse. Check for continuity across the fuse with an ohmmeter.

Reading	Result
Open (OL)	Replace fuse
Closed (O)	Fuse is good

BIN SWITCH

FUNCTION

Movement of the water curtain/ice dampers control bin switch operation. The bin switch has two main functions:

1. Terminating the Harvest cycle and returning the ice machine to the Freeze cycle. This occurs when the bin switch is opened and closed again within 30 seconds during the Harvest cycle.
2. Automatic ice machine shut-off.
   If the storage bin is full at the end of a Harvest cycle, the sheet of cubes fails to clear the water curtain/ice dampers and holds it open. After the water curtain/ice dampers are held open for 30 seconds, the ice machine shuts off. The ice machine remains off until enough ice is removed from the storage bin to allow the sheet of cubes to drop clear of the water curtain/ice dampers. As the water curtain/ice dampers swing back to the operating position, the bin switch closes and the ice machine restarts, provide the 3-minute delay has expired.

Important

The water curtain/ice dampers must be ON (bin switch closed) to start ice making.

SPECIFICATIONS

The bin switch is a magnetically operated reed switch. The magnet is attached to the lower right corner of the water curtain and both ends of ice dampers.

The bin switch is connected to a varying D.C. voltage circuit. (Voltage does not remain constant.)

NOTE: Because of a wide variation in D.C. voltage, it is not recommended that a voltmeter be used to check bin switch operation.

SYMPTOMS

Bin Switch Fails Open

G Model control boards or E Model control boards with firmware version Rev.2.047 or higher.

- The ice machine will not start an ice making cycle and the display indicates "Full Bin".
- The ice machine displays "Full Bin Remove Ice" in the clean cycle.

E Control Boards with firmware versions prior to Rev.2.047

- The ice machine will not start an ice making cycle and the display indicates "Curtain Open".
- The ice machine will run in the clean cycle.

Bin Switch Fails Closed

- When running a "Long Harvest" alert is displayed and safety limit 2 indicated.
- May be off on a safety limit 2.
- The harvest cycle continues after ice opens and closes the ice damper (harvest cycle is 3.5 minutes).

DIAGNOSTICS

1. Verify bin switch, curtain/damper and curtain/damper magnet are in place.

- Press the Menu button.
- Scroll down to Service and press right arrow.
- Scroll down to Diagnostics and press right arrow.
- Scroll down to Inputs and press right arrow to display curtain switch readings (Curt SW1, Curt SW2, etc).

2. Open and close the ice damper(s) repeatedly while observing the display and control board lights.
   A. Curtain switch cycles open/closed and control board light energizes/de-energizes - Bin switch is operating normally
   B. Curtain switch remains closed and control board light remains on - Go to step 3
   C. Curtain switch remains open and control board light remains off - Go to step 3
3. Disconnect bin switch wire from control board.
4. Jumper control board bin switch wire to ground, press the power button and observe the display and control board lights.
   A. Curtain switch closes, control board light energizes and ice machine starts - Replace bin switch
   B. Curtain switch remains open and control board light is off - Verify procedure was correctly followed - Replace control board.

WATER LEVEL CONTROL CIRCUITRY

FUNCTION

The water level probe controls the water level by sensing whether water is or is not contacting the water level probe. The water level probe has three sensing probes. Two probes are equal in length and are used to measures conductivity for diagnostics, ice clarity and water miser options. Factory default settings measure resistance from both long probes to the short probe.

SPECIFICATIONS

Freeze Cycle Water Level Setting

During the Freeze cycle, the water level probe is set to maintain the proper water level above the water pump housing. The water level is not adjustable. If the water level is incorrect, check the water level probe position. Reposition or clean the probe as necessary.

Water Inlet Valve Safety Shut-Off

In the event of a water level probe failure, this feature limits the maximum amount of time the water inlet valve can remain.

SINGLE EVAPORATOR MODELS

Regardless of the water level probe input, the control board automatically shuts off the water inlet valve if it remains on for 12.5 continuous minutes (30 seconds in prechill and two 6 minute periods in the freeze cycle).

DUAL EVAPORATOR MODELS

Regardless of the water level probe input, the control board automatically shuts off the water inlet valve if it remains on for 16.5 continuous minutes (30 seconds in prechill and two 8 minute periods in the freeze cycle).

Prechill & Freeze Cycle Operation

The water inlet valve energizes and de-energizes in conjunction with the water level probe located in the water trough.

- The water inlet valve is ON when there is no water in contact with the water level probes.
- The water inlet valve turns OFF after water contacts the water level probes for 6 continuous seconds.
- The water inlet valve can cycle ON and OFF once in the prechill and up to two times in the freeze cycle.
- Maximum fill time is:
  Single evaporator 12.5 minutes
  Dual evaporator 16.5 minutes

The water inlet valve energizes in the Prechill cycle and will de-energize if water touches the high level probe (in most instances the water trough can't fill in the prechill cycle and the water inlet valve will remain energized into the freeze cycle). The water inlet valve will remain energized until water contacts the high water probe. The water inlet valve will cycle ON, and then OFF one more time to refill the water trough. The water inlet valve is now OFF for the duration of the freeze cycle.

Diagnostics

SYMPTOMS

- Water trough overfills
- Water trough will not fill

NOTE: The ice machine will initiate a premature harvest if the high water level probe circuit is complete and the low water level probe is open.

WATER TROUGH OVERFILLING DURING THE FREEZE CYCLE

Step 1 Press the power button and turn off the ice machine.

Step 2 If water continues to flow with the ice machine off, disconnect power. If water continues to flow with power disconnected verify water pressure is below 80 psig before replacing the water inlet valve. If the water stops continue with next step.

Step 3 Check water level probe mounting and verify secure wiring connections at the probe and control board.

Step 4 Scroll to Service/Diagnostics/Inputs and press down arrow until Wtr Low and Wtr High are displayed.

- No is displayed on both Wtr low and Wtr high - The control board is not receiving a sensing water signal - Go to next step.
- Yes is displayed - The control board is receiving a sensing water signal from the low and high probes - Replace the control board.

Step 5 Disconnect the water level probe wiring harness from the control board and ohm harness and water level probe. Normal readings will show no resistance.

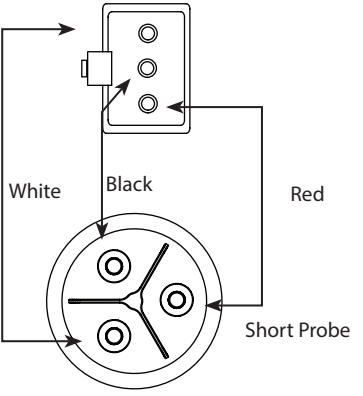

Ohm water Level Probe and Wiring Harness

Step 6 When all ohm tests are normal, replace the control board. When any measurement fails, disconnect the wiring harness from the water level probe and ohm the water level probe with the wiring harness removed from the circuit. Results will determine whether the wiring harness or probe will need replacement.

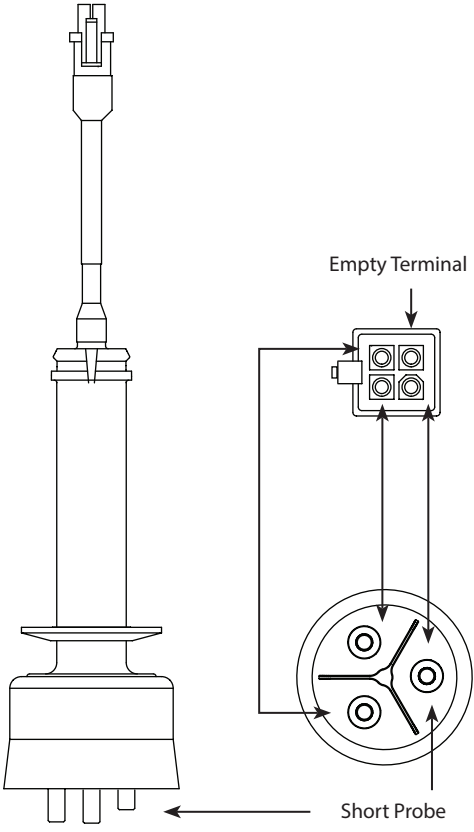

Ohm Water Level Probe

WATER TROUGH WILL NOT FILL

Step 1 Verify water is supplied to the ice machine.

Step 2 Scroll to Service/Diagnostics/Inputs and press down arrow until Wtr Low and Wtr High are displayed.

A. Yes is displayed - Control board is receiving a sensing water signal. Proceed to step 3.

B. No is displayed - Control board is not receiving a sensing water signal. Check for voltage at the water inlet valve coil.

Step 3 Disconnect water level probe, observe LCD display text.

A. No is displayed - Clean the water level probe and test interconnecting wiring.

B. Yes is displayed - Replace the Control Board.

Step 4 Ohm probe - Refer to previous page for procedure.

WATER LEVEL PROBE CIRCUIT CHECK AT CONTROL BOARD

Wait until prechill cycle starts, then jumper water level probe connections (2 & 3) on the control board.

A. Wtr High displays yes and the water stops. Repair wire or replace water level probe.

B. Wtr High displays No and the water continues to flow. Replace control board.

ICE THICKNESS PROBE (INITIATES HARVEST)

FUNCTION

The ice thickness probe senses ice on the evaporator and signals the control board to start a harvest cycle.

SPECIFICATIONS

Freeze Time Lock-In Feature

The ice machine control system incorporates a 6 minute freeze time lock-in feature. This prevents the ice machine from short cycling in and out of harvest.

Maximum Freeze Time

The maximum freeze time is 35 minutes at which time the control board automatically initiates a harvest sequence. Firmware 5.009 or earlier - Maximum freeze time is 60 minutes at which time the control board automatically initiates a harvest sequence.

Maximum Temperature

Maximum temperature for the ice thickness probe is 120°F (49°C). Do not clean probe in a dishwasher or expose to temperatures above the maximum.

Ice Thickness Check

The ice thickness probe is factory-set to maintain the ice bridge thickness at 1/8 in. (3 mm).

NOTE: Make sure the water curtain/splash shields are in place when performing this check. It prevents water from splashing out of the water trough. Remove the curtain to make an adjustment, then replace immediately after the adjustment is made.

1. Inspect the bridge connecting the cubes. It should be about 1/8 in. (3 mm) thick.
2. If adjustment is necessary, turn the ice thickness probe adjustment screw clockwise to increase bridge thickness or counterclockwise to decrease bridge thickness. Set a 9/32" gap between the ice thickness probe and evaporator as a starting point. Then adjust to achieve 1/8" ice thickness.
3. Make sure the ice thickness probe wire and the bracket do not restrict movement of the probe.

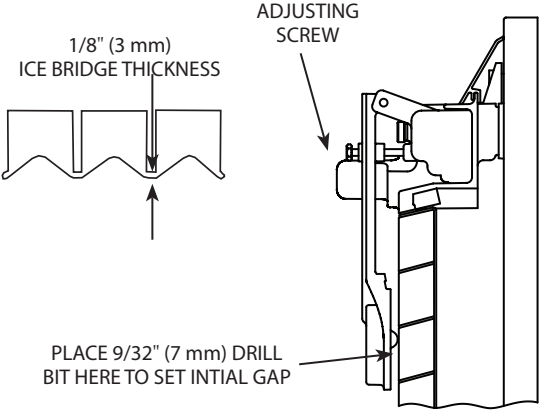

ICE THICKNESS ADJUSTMENT

Ice Machine Doesn't Harvest Properly

ICE MACHINE CYCLES INTO HARVEST PREMATURELY

OR

ICE MACHINE DOES NOT CYCLE INTO HARVEST

Symptoms

- Low ice production
- Thin or thick ice in bin
- Freeze cycles are faster or longer than published cycle times
- Large sheet of ice on evaporator

Diagnostics

1. Remove all ice from the evaporator when present.
2. Press the power button and turn off the ice machine.
3. Disconnect power to the ice machine at the main disconnect.
4. Inspect the ice thickness probe for physical damage. On the face of the probe look for bulging, cracks around the nipple and deformed pivot pins or pivot pin arms.
5. Verify the ice thickness probe gap is approximately 9/32" (7 mm). See "Ice Thickness Check" on page 180.
6. Make sure the ice thickness probe wire and the bracket do not restrict movement of the probe.
7. Reapply power to the ice machine at the main disconnect and confirm the ice machine is off.
8. Press the menu button, scroll down to Service, press the right arrow, scroll down to Real Time Data, press right arrow - With the brackets around Time & Temp press the right arrow - Scroll down until 100Hz & 120Hz are displayed.

9. Observe the initial number range and perform a scratch test.

- Remove the water curtain or splash shield if present.
- Lift the ice thickness probe and carefully scratch the nipple on the face of the probe for at least 10 seconds.

The initial numbers displayed are constantly changing and are less than 3000.

- If the numbers increase by 3000 or more above the initial reading, begin the "Harvest Test" on page 183.

Example: Intial reading is 300 - A scratch test reading of 3300 or higher indicates a good ice thickness probe.

The initial numbers displayed do not change or initial numbers did not increase by 3000 during scratch test.

- Verify the ice thickness probe connector is properly plugged into the board (J11) and the ice thickness probe wiring is correct. If the wiring is incorrect replace the ice thickness probe.

J11 Connector On Control Board	
Pin 1 (+)	Red
Pin 2 (-)	Black
Pin 3	Twisted Wire

10. Unplug the ice thickness probe and set a VOM to DC voltage scale - Measure voltage across Pin 1 (+) Red Wire and Pin 2 (-) Black Wire.

    A. Voltage measures 3.25 to 3.35 VDC. Replace ice thickness probe.

    B. Voltage does not measure 3.25 to 3.35 VDC. Replace the control board.

Harvest Test

1. Press the power button to start an ice making cycle. Remove water curtain or splash guard when present.
2. Remove the ice thickness probe, rotate and remount with the nipple facing away from the evaporator.
3. Press the Menu button, scroll down to "Service", press the right arrow, scroll down to "RealTimeData", press the right arrow, scroll down to "Inputs", press the right arrow and then scroll down to "Ice Sense".
4. Wait until 6.5 minutes into the freeze cycle (sequence 4. Freeze). Refer to Sequence of Operation starting on page 101 for details.
5. Scratch the ice thickness probe nipple for approximately 30 seconds.

HARVEST CYCLE STARTS AND "ICE SENSE" CHANGES FROM NO TO YES

The ice thickness probe and control board are operating normally.

- Initiate a manual harvest cycle to remove ice from the evaporator. Refer to "Manual Harvest" on page 85.
- Press the power button and turn off the ice machine.
- Remove the ice thickness probe, rotate and remount with the nipple facing the evaporator. Set the ice thickness probe gap to 9/32" (7 mm). Confirm the cable is not twisted or binding and the ice thickness probe swings freely, then re-install the water curtain.
- Perform an "Ice Thickness Check" on page 180 and test run the ice machine 2 cycles.

HARVEST CYCLE DOES NOT START

- If the control board fails to initiate a harvest cycle replace the control board and perform "Ice Thickness Check" on page 180.

HIGH PRESSURE CUTOUT (HPCO) CONTROL

FUNCTION

Stops the ice machine if subjected to excessive high-side pressure. The HPCO control is normally closed, and opens on a rise in discharge pressure.

SPECIFICATIONS

Specifications	
Cut-Out	**Cut-In**
450 psig ±7 (3102 kPa ±48 31 bar ±.48)	300 psig ±10 (2068 kPa 20.68 bar)
Automatic Reset	

SYMPTOM

Opening the HPCO will cause the control board to initiate a 60 minute delay. The display counts down from 60 minutes to 0 minutes, at which point the ice machine attempts a restart. If the HPCO is closed the ice machine will continue to run. If the HPCO remains open after the 60 minute delay or reopens when the compressor starts, the ice machine will start another 60 minute delay period.

1. Machine is off and the display indicates "Delay XX min, HPCO Active"
2. Machine is running and the display has an alert triangle - Press left arrow to display "HPC Fault".

CHECK PROCEDURE

Symptom #1 Machine is off and the display indicates "Delay xx min, HPCO Active".

1. Leave all wiring connectors attached and perform testing within the 60 minute time delay period
2. Check for line voltage at P9 connector on control board (Two wire connector adjacent to 9 pin connector).
   A. Line voltage present - HPCO switch has reset and closed.
   B. No line voltage present - HPCO switch is open. Verify pressure - Below cut-in replace HPCO - Above cut-in find root cause problem.
3. Depending on timing either wait for the delay period to end or start a new freeze cycle by cycling the power button.
   A. HPCO is open - Another 60 minute delay period starts.
   B. HPCO closed - A 3.5 minute harvest cycle starts followed by an ice making cycle.
4. Run the system to see if the control trips at the rated pressure. If HPCO opens at a pressure significantly lower or higher than the control setting of 450 psig replace the HPCO.
5. If the control opens at the correct pressure find the root cause - Fan motor, dirty condenser, refrigeration system issue, etc.The ice machine will go to an initial start sequence if the HPCO is closed. If the HPCO is open, another 60 minute delay period starts. When the compressor relay closes the control board checks the HPCO.

Symptom #2 Machine is running and the display has a flashing alert triangle and indicates "HPC Fault" after the left arrow is pressed

1. Navigate to the event log on the Service menu. Scroll down to HPC Fault EO5. Open the event and view when and how often HPCO Fault has occurred.
2. If this is a one time event it may be intermittent and caused by conditions around the unit changing. For example: High ambient temperature, water turned off to condenser (water cooled unit) etc.
3. Run the system to see if the control trips at the rated pressure. If HPCO opens at a pressure significantly lower than the control setting of 450 psig replace the HPCO.
4. If the control opens at the correct pressure (+-10 lbs) find the root cause - Fan motor, dirty condenser, refrigeration system issue, etc.

FAN CYCLE CONTROL

FUNCTION

Cycles the fan motor on and off to maintain proper operating discharge pressure.

The fan cycle control closes on an increase, and opens on a decrease in discharge pressure.

SPECIFICATIONS

Specifications		
Model	**Cut-In (Close)**	**Cut-Out (Open)**
I0300 / I0320 I0520 I0450 / I0500 / I0600 I0606 / I0850 /JC0995	250 ±5 (1723 kPa ±.34) (17.23 bar ±.34)	200 ±5 (1517 kPa ±.34) (15.17 bar ±.34)
I0906/I1000 / I1106 / I1200 I1400 / I1406/ I1800	275 psig ±5 (1896 kPa ±34) (18.96 bar±.34)	225 psig ±5 (1551 kPa ±34) (15.51 bar ±.34)

CHECK PROCEDURE

1. Verify fan motor windings are not open or grounded, and fan spins freely.
2. Connect manifold gauges to ice machine.
3. Hook voltmeter in parallel across the fan cycle control, leaving wires attached.
4. Refer to chart below.

FCC Setpoint:	Reading Should Be:	Fan Should Be:
Above Cut-In	0 Volts	Running
Below Cut-Out	Line Voltage	Off

THERMISTORS

FUNCTION

Thermistor resistance values change with temperature. The value supplied to the control board is used to identify temperature at the thermistor location.

SPECIFICATIONS

Temperature of Thermistor		Resistance
°C	**°F**	**K Ohms (x 1000)**
-30° - -20°	-22° - -4°	820.85 - 466.35
-20° - -10°	-4° - 14°	466.35 - 269.05
-10° - 0°	14° - 32°	269.05 - 160.70
0° - 10°	32° - 50°	160.70 - 98.930
10° - 20°	50° - 68°	98.930 - 62.015
20° - 30°	68° - 86°	62.015 - 39.695
30° - 40°	86° - 104°	39.695 - 25.070
40° - 50°	104° - 122°	25.070 - 17.481
50° - 60°	122° - 140°	17.481 - 11.860
60° - 70°	140° - 158°	11.860 - 8.1900
70° - 80°	158° - 176°	8.1900 - 5.7530
80° - 90°	176° - 194°	5.7530 - 4.1015
90° - 100°	194° - 212°	4.1015 - 2.9735
100° - 110°	212° -230°	2.9735 - 2.1885
110° - 120°	230° - 248°	2.1885 - 1.6290
120° - 130°	248° - 266°	1.6290 - 1.2245
130° - 140°	266° - 284°	1.2245 - 0.9319
140° - 150°	284° - 302°	0.9319 - 0.7183
150° - 160°	302° - 320°	0.7183 - 0.5624
160° - 170°	320° - 338°	0.5624 - 0.4448
170° - 180°	338° - 356°	0.4448 - 0.3530
180° - 190°	356° - 374°	0.3530 - 0.2831
190° - 200°	374° - 392°	0.2831 - 0.2273

Thermistor Matrix

Four thermistors are located on the ice machine. They are labeled T1, T2, T3, T4.

TEMPERATURE SENSOR LOCATION							
Ice Machine Description	Evaporator In	Evaporator Out for 1st circuit	Evaporator Out for 2nd circuit or 2nd Evaporator	Compressor Discharge	Condenser Liquid Line	Receiver Inlet	Receiver Outlet
22" & 30" 1 Evaporator with 1 Circuit IMH Air-Cooled & Water-Cooled	T3	T4		T2	T1		
30" & 48" 1 Evaporator with 2 Circuits IMH Air-Cooled & Water-Cooled		T4	T3	T2	T1		
30" 1 Evaporator with 1 Circuit RCU Air-Cooled	T3	T4		T2		T1	
30" & 48" 1 Evaporator with 2 Circuits RCU Air-Cooled		T4	T3	T2		T1	
QuietQube 1 Evaporator with 1 Circuit RCU Air-Cooled	T3	T4				T1	T2
QuietQube 1 Evaporator with 2 Circuits or 2 Evaporators RCU Air-Cooled		T4	T3			T1	T2

SYMPTOM

Alert icon on the display is flashing and the alert indicates a T1, T2, T3, or T4 Fault.

CHECK PROCEDURE

- Press the Menu button.
- Scroll down to Service and press right arrow.
- Scroll down to Diagnostics and press right arrow
- Scroll down to Temp Sensors and press right arrow to display thermistor temperature readings.

NOTE: An open thermistor will display -22°F (-30°C) and a shorted thermistor displays 475°F (246°C).

Thermistor Test

1. Disconnect thermistor from control board and measure resistance.
2. Measure temperature at the thermistor.
3. Compare measured resistance/temperature readings to resistance/temperature relationship chart.
   A. Within 10% of the published resistance value - Thermistor is good
   B. Not within 10% of the published resistance value - Thermistor is defective.

Control Board Test

1. Disconnect thermistor from control board - The display temperature reading, dropping to -22°F (-30°C) indicates the control board is good.
2. Short thermistor pins - The display temperature reading, climbing to 475°F (246°C) indicates the control board is good.

HARVEST ASSIST AIR PUMP

FUNCTION

The air pump helps break the vacuum between the sheet of ice and the evaporator which results in shorter harvest cycles.

SPECIFICATIONS

115 Volt or 230 Volt - matches the ice machine voltage.

CHECK PROCEDURE

1. The air pump is wired in parallel with the harvest valve - Verify the ice machine is in the harvest cycle and the harvest valve is energized.
2. If there is voltage at the air pump connector, use a volt ohm meter to verify there is no continuity through the motor windings then replace motor.

COMPRESSOR ELECTRICAL DIAGNOSTICS

The compressor does not start or will trip repeatedly on overload.

Check Resistance (Ohm) Values

NOTE: Compressor windings can have very low ohm values. Use a properly calibrated meter.

Perform the resistance test after the compressor cools. The compressor dome should be cool enough to touch (below 120°F/49°C) to assure that the overload is closed and the resistance readings will be accurate.

SINGLE PHASE COMPRESSORS

1. Disconnect power then remove the wires from the compressor terminals.
2. The resistance values between C and S and between C and R, when added together, should equal the resistance value between S and R.
3. If the overload is open, there will be a resistance reading between S and R, and open readings between C and S and between C and R. Allow the compressor to cool, then check the readings again.

THREE PHASE COMPRESSORS

1. Disconnect power and remove the wires from the compressor terminals.
2. The resistance values between L1 and L2, between L2 and L3, and between L3 and L1 should all be equal.
3. If the overload is open, there will be open readings between L1 and L2, between L2 and L3, and between L3 and L1. Allow the compressor to cool, then check the readings again.

CHECK MOTOR WINDINGS TO GROUND

Check continuity between all three terminals and the compressor shell or copper refrigeration line. Scrape metal surface to get good contact. If continuity is present, the compressor windings are grounded and the compressor should be replaced.

COMPRESSOR DRAWING LOCKED ROTOR

To determine if the compressor is seized, check the amp draw while the compressor is trying to start.

The two likely causes of this are a defective starting component or a mechanically seized compressor.

To determine which you have:

1. Install high and low side gauges.
2. Try to start the compressor.
3. Watch the pressures closely.
   A. If the pressures do not move, the compressor is seized. Replace the compressor.
   B. If the pressures move, the compressor is turning slowly and is not seized. Check the capacitors and relay.

COMPRESSOR DRAWING HIGH AMPS

The continuous amperage draw on start-up should not be near the maximum fuse size indicated on the serial tag.

DIAGNOSING START COMPONENTS

If the compressor attempts to start, or hums and trips the overload protector, check the start components before replacing the compressor.

Capacitor

Visual evidence of capacitor failure can include a bulged terminal end or a ruptured membrane. Do not assume a capacitor is good if no visual evidence is present. A good test is to install a known good substitute capacitor. Use a capacitor tester when checking a suspect capacitor. Clip the bleed resistor off the capacitor terminals before testing.

Relay

The relay has a set of contacts that connect and disconnect the start capacitor from the compressor start winding. The contacts on the relay are normally closed (start capacitor in series with the start winding). The relay senses the voltage generated by the start winding and opens the contacts as the compressor motor starts. The contacts remain open until the compressor is de-energized.

RELAY OPERATION CHECK

1. Disconnect wires from relay terminals.
2. Verify the contacts are closed.
   Measure the resistance between terminals 1 and 2. No continuity indicates open contacts. Replace the relay.
3. Check the relay coil.
   Measure the resistance between terminals 2 and 5. No resistance indicates an open coil. Replace the relay.

PTCR

The PTCR allows current to flow through the start winding at compressor startup. Current flow heats the ceramic discs in the PTCR. The electrical resistance increases with temperature and stops all except a trickle of current flow through the start winding. The small flow of current keeps the PTCR hot (260°F/127°C) and the start winding out of the circuit.

The PTCR must be cooled before attempting to start the compressor, otherwise the PTCR will heat up too quickly and stop current flow through the start winding before the compressor motor reaches full speed.

⚠ Warning

Disconnect electrical power to the entire ice machine at the building electrical disconnect box before proceeding.

NOTE: If a PTCR is dropped internal damage can occur to the ceramic PTCR discs. The ceramic disc can chip and cause arcing which leads to PTCR failure. Since there is no way to open the PTCR in order to determine if the ceramic disc is chipped or not, it must be discarded when dropped.

PTCR Operation Check

1. Visually inspect the PTCR. Check for signs of physical damage.

NOTE: The PTCR case temperature may reach 210°F (100°C) while the compressor is running. This is normal. Do not change a PTCR just because it is hot.

2. Wait at least 10 minutes for the PTCR to cool to room temperature.
3. Remove the PTCR from the ice machine.
4. Measure the resistance of the PTCR as shown. The resistance reading must be between:

- Two Terminal PTCR Black = 24.5 to 45.5 ohms
- Two Terminal PTCR Blue = 21 to 39 ohms
- Three Terminal PTCR Tan = 10.5 to 19.5 ohms.

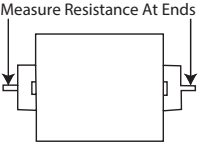

Two Terminal PTCR

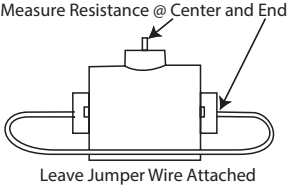

Three Terminal PTCR

Refrigeration Components

HEAD PRESSURE CONTROL VALVE

Manitowoc remote systems require head pressure control valves with special settings. Replace defective head pressure control valves only with "original" Manitowoc replacement parts.

Refrigerant Charge Verification

The correct amount of refrigerant (name plate charge) is required to operate correctly at all ambient conditions.

An ice machine with an overcharge or undercharge of refrigerant may function properly at higher ambient temperatures and fails at lower ambient temperatures. Symptoms of incorrect refrigerant amount are:

- Works during the day and malfunctions at night, and/ or fails whenever the outdoor temperature drops.
- A Safety limit is stored in control board memory.

Refrigerant loss and ambient temperature are directly related to each other. As the ambient temperature drops, more refrigerant is stored in the condenser.

When the refrigerant charge and ambient temperature create an undercharge of refrigerant in the freeze cycle, the receiver dip tube will lose it's liquid seal. Without liquid refrigerant to the TXV, the ice machine fails to make a full sheet of ice in 35 minutes and a safety limit #1 results.

NOTE: When a head pressure control valve is being replaced or refrigerant charge is suspected, verify the refrigerant charge is correct by recovering the refrigerant, weighing and comparing to the nameplate amount. Refer to Refrigerant Recovery/Evacuation" page 209 for recovery procedures.

Freeze Cycle Operation All Models

The R404A head pressure control valve is non adjustable.

At ambient temperatures of approximately 70°F (21°C) or above, refrigerant flows through the valve from the condenser to the receiver inlet. At temperatures below this (or at higher temperatures if it is raining), the head pressure control dome's nitrogen charge closes the condenser port and opens the bypass port from the compressor discharge line.

In this modulating mode, the valve maintains minimum head pressure by building up liquid in the condenser and bypassing discharge gas directly to the receiver.

Harvest Cycle Operation
Remote Condenser Models

The head pressure control cycles into full bypass due to the pressure drop when the harvest valve opens. Refrigerant flows from the compressor to the evaporator through the harvest valve and the head pressure valve is out of the circuit.

Diagnostics

FREEZE CYCLE - REMOTE CONDENSER

1. Determine if the coil is clean.
2. Determine the air temperature entering the condenser.
3. Determine if the head pressure is high or low in relationship to the outside temperature. (Refer to the proper "Cycle Times/24-Hour Ice Production/ Refrigerant Pressure Charts" page 225).
4. Determine the temperature of the liquid line entering the receiver by feeling it. This line is normally warm; "body temperature."
5. Using the information gathered, refer to the chart.

NOTE: A head pressure control valve that will not bypass, will function properly with condenser air temperatures of approximately 70°F (21°C) or above. When the temperature drops below 70°F (21°C), the head pressure control valve fails to bypass and the ice machine malfunctions. Lower ambient conditions can be simulated by rinsing the condenser with cool water during the freeze cycle.

Condition	Probable Cause	Corrective Measure
Discharge Pressure - High Liquid Line Temperature - Hot	Valve stuck in bypass	Replace valve
Discharge Pressure - Low Liquid Line Temperature - Cold	Valve not bypassing	Replace valve
Discharge Pressure - Low Liquid Line Temperature - Hot	Ice Machine Low on Charge	Refrigerant Charge Verification

Harvest Cycle

REMOTE CONDENSER

The head pressure control cycles into full bypass due to the pressure drop when the harvest valve opens. Refrigerant flows from the compressor to the evaporator through the harvest valve and the head pressure valve is out of the circuit.

Undercharge Symptoms

- Safety limit #1 or Safety limit #2 in control board memory, a flashing triangle alert and after pressing left arrow Long Freeze or Long Harvest is displayed.
- Harvest cycle suction pressure is low.
- Harvest cycle discharge pressure is low.
- Liquid line entering receiver feels warm to hot in the freeze cycle.

Overcharge Symptoms

- Safety limit #2 in control board memory, a flashing triangle alert and after pressing left arrow Long Harvest is displayed.
- Harvest cycle discharge pressure is normal.
- Freeze cycle time, suction and discharge pressure are normal and the ice machine will not harvest. The sheet of ice cubes show little or no sign of melting when removed from the evaporator after the harvest cycle has been completed. (If the cubes are melted you have a release problem, clean the ice machine).

HARVEST PRESSURE REGULATING (HPR) SYSTEM REMOTE CONDENSER ONLY

GENERAL

The harvest pressure regulating (HPR) system includes:

- Harvest pressure regulating solenoid valve (HPR solenoid). This is an electrically operated valve which opens when energized, and closes when de-energized.
- Harvest pressure regulating valve (HPR valve). This is a pressure regulating valve which modulates open and closed, based on the refrigerant pressure at the outlet of the valve. The valve closes completely and stops refrigerant flow when the pressure at the outlet rises above the valve setting.

FREEZE CYCLE

The HPR system is not used during the freeze cycle. The HPR solenoid is closed (de-energized), preventing refrigerant flow into the HPR valve.

HARVEST CYCLE

During the harvest cycle, the check valve in the discharge line prevents refrigerant in the remote condenser and receiver from back feeding into the evaporator and condensing to liquid.

The HPR solenoid is opened (energized) during the harvest cycle, allowing refrigerant gas from the top of the receiver to flow into the HPR valve. The HPR valve modulates open and closed, raising the suction pressure high enough to sustain heat for the harvest cycle, without allowing refrigerant to condense to liquid in the evaporator.

In general, harvest cycle suction pressure rises, then stabilizes in the range of 70-100 psig (517-758 kPa). Exact pressures vary from model to model. Refer to cycle time/24 hour ice production and operational pressure charts.

HPR DIAGNOSTICS

Steps 1 through 5 can be quickly verified without attaching a manifold gauge set or thermometer.

All questions must have a yes answer to continue the diagnostic procedure.

1. Liquid line warm?
   (Body temperature is normal)
   If liquid line is cooler than body temperature, refer to "Head Pressure Control Valve" on page 197.
2. Ice fill pattern normal?
   Refer to "Ice Formation Pattern" on page 138.
3. Freeze time normal?
   "Cycle Times/24-Hour Ice Production/ Refrigerant Pressure Charts" on page 225
   Shorter freeze cycles - Refer to "Head Pressure Control Valve" on page 197.
   Longer freeze cycles - Refer to "Water System Checklist" on page 137 then refer to "Troubleshooting By Symptom" on page 119.
4. Harvest time is longer than normal and control board indicates safety limit #2?
   "Cycle Times/24-Hour Ice Production/ Refrigerant Pressure Charts" on page 225

5. Discharge line temperature is greater than 150°F (66°C) [I0850/I1000 Air/Water Only - 140°F (60°C)] at the end of the freeze cycle? See "Discharge Line Temperature Analysis" on page 151
6. Connect refrigeration manifold gauge set to the access valves on the front of the ice machine. Establish baseline by recording suction and discharge pressure and freeze & harvest cycle times. (Refer to **"Cycle Times/24-Hour Ice Production/ Refrigerant Pressure Charts" on page 225** for data collection detail.
7. Freeze cycle Head Pressure is in the range indicated in the cycle time/24 hour ice production and operational pressure chart?
   If the head pressure is low refer to "Freeze Cycle Discharge Pressure Low Checklist" on page 144
8. Freeze cycle Suction Pressure normal?
   Refer to "Analyzing Suction Pressure" on page 145 if suction pressure is high or low.
9. Harvest cycle suction and discharge pressures are lower than indicated in the cycle times/refrigerant pressures/24 hour ice production chart?
10. Replace Harvest Pressure Regulating solenoid.

WATER REGULATING VALVE

Water-Cooled Models Only

FUNCTION

The water regulating valve maintains the freeze cycle discharge pressure.

CHECK PROCEDURE

1. Determine if the head pressure is high or low (refer to cycle time/24 hour ice production and operational pressure chart for the model you are servicing).
2. Verify the condenser water meets specifications.
3. Adjust valve to increase or decrease discharge pressure.
4. Determine the temperature of the liquid line entering the receiver by feeling it. This line is normally warm; body temperature.
5. Using the information gathered, refer to the list for diagnosis.

Problem (Freeze Cycle)

Valve not maintaining discharge pressure.

- Valve incorrectly set, dirty or defective. Adjust, clean or replace valve.

Discharge pressure extremely high; Liquid line entering receiver feels hot.

- Water regulating valve incorrectly set or not opening.

Discharge pressure low, Liquid line entering receiver feels warm to hot.

- Ice machine low on charge. Verify "Total System Refrigerant Charge" on page 222.

Refrigerant Recovery/Evacuation

SELF-CONTAINED MODEL PROCEDURE

Do not purge refrigerant to the atmosphere. Capture refrigerant using recovery equipment. Follow the manufacturer's recommendations.

Important

Manitowoc assumes no responsibility for the use of contaminated refrigerant. Damage resulting from the use of contaminated refrigerant is the sole responsibility of the servicing company.

Important

Replace the liquid line drier after recovering the refrigerant and before evacuating and recharging. Use only a Manitowoc (OEM) liquid line filter-drier to prevent voiding the warranty.

Connections

Manifold gauge sets must utilize low loss fittings to comply with U.S. Government rules and regulations.

Make these connections:

- Suction side of the compressor through the suction service valve.
- Discharge side of the compressor through the discharge service valve.

Self-Contained Recovery/Evacuation

1. Press the power button and cycle the ice machine off.
2. Install manifold gauges, scale and recovery unit or two-stage vacuum pump and open high and low side on manifold gauges.

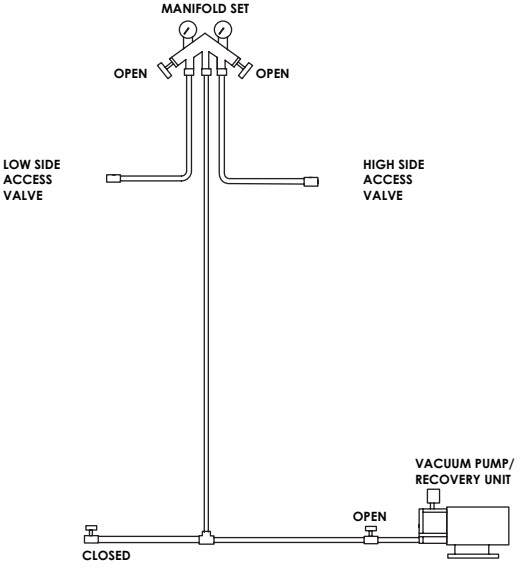

RECOVERY/EVACUATION CONNECTIONS

3. Perform recovery or evacuation:
   A. Recovery: Operate the recovery unit as directed by the manufacturer's instructions.
   B. Evacuation prior to recharging: Pull the system down to 500 microns. Then, allow the pump to run for an additional half hour. Turn off the pump and perform a standing vacuum leak check.
4. Follow the Charging Procedures.

Self-Contained Charging Procedures

Important

The charge is critical on all Manitowoc ice machines. Use a scale to ensure the proper charge is installed.

1. Be sure the ice machine is off.

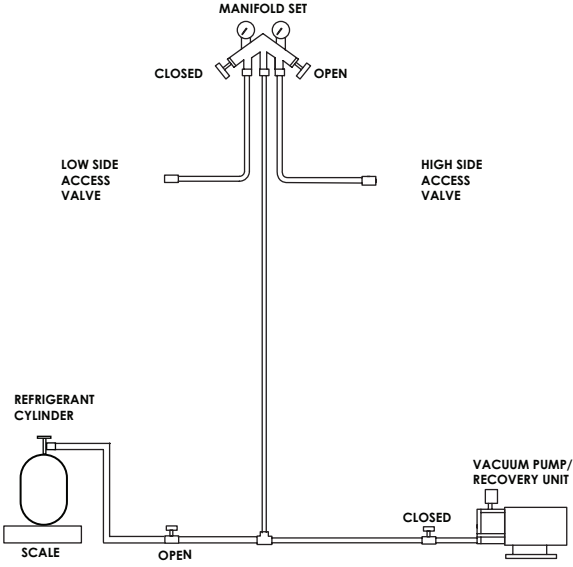

CHARGING CONNECTIONS

2. Close the vacuum pump valve, the low side service valve, and the low side manifold gauge valve.
3. Open the high side manifold gauge valve.
4. Open the charging cylinder and add the proper refrigerant charge (shown on nameplate) through the discharge service valve.
5. Let the system "settle" for 2 to 3 minutes.
6. Close the high side on the manifold gauge set.
7. Press the power button.
8. Add any remaining refrigerant through the suction service valve (if necessary).

NOTE: Manifold gauges must be removed properly to ensure that no refrigerant contamination or loss occurs.

9. Make sure that all of the vapor in the charging hoses is drawn into the ice machine before disconnecting the charging hoses.
   A. Run the ice machine in freeze cycle.
   B. Remove the high side low loss fitting from the access valve.
   C. Open the high and low side valves on the manifold gauge set. Any refrigerant in the lines will be pulled into the low side of the system.
   D. Allow the pressures to equalize while the ice machine is in the freeze cycle.
   E. Remove the hoses from the ice machine and install the caps.

REMOTE CONDENSER MODEL PROCEDURE

Refrigerant Recovery/Evacuation

Do not purge refrigerant to the atmosphere. Capture refrigerant using recovery equipment. Follow the manufacturer's recommendations.

Important

Manitowoc Ice assumes no responsibility for the use of contaminated refrigerant. Damage resulting from the use of contaminated refrigerant is the sole responsibility of the servicing company.

Important

Replace the liquid line drier after recovering the refrigerant and before evacuating and recharging. Use only a Manitowoc (O.E.M.) liquid line filter drier to prevent voiding the warranty.

CONNECTIONS

Important

Recovery/evacuation of a remote system requires connections at four points for complete system evacuation.

Make these connections:

- Suction side of the compressor through the suction service valve.
- Discharge side of the compressor through the discharge service valve.
- Receiver outlet service valve, which evacuates the area between the check valve in the liquid line and the liquid line solenoid.
- Access (Schraeder) valve on the discharge line quick-connect fitting, located on the outside of the compressor/evaporator compartment. This connection evacuates the condenser. Without it, the magnetic check valves would close when the pressure drops during evacuation, preventing complete evacuation of the condenser.

NOTE: Manitowoc recommends using an access valve core removal and installation tool on the discharge line quick-connect fitting. This permits access valve core removal. This allows for faster evacuation and charging, without removing the manifold gauge hose.

REMOTE CONDENSER RECOVERY/EVACUATION

1. Press the power button to stop the ice machine.
2. Install manifold gauges, scale and recovery unit or two-stage vacuum pump.
3. Open high and low side on the manifold gauge set.
4. Perform recovery or evacuation:
   A. Recovery: Operate the recovery unit as directed by the manufacturer's instructions.
   B. Evacuation prior to recharging: Pull the system down to 500 microns. Then, allow the pump to run for an additional hour. Turn off the pump and perform a standing vacuum leak check.

NOTE: Check for leaks with an electronic leak detector after charging the ice machine.

5. Follow the Charging Procedures.

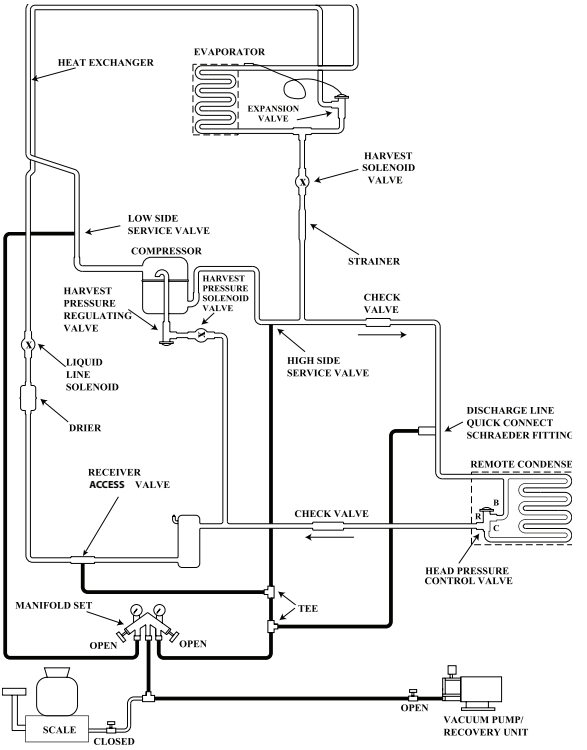

REMOTE RECOVERY/EVACUATION CONNECTIONS

Remote Charging Procedures

1. Close the vacuum pump valve and the low side manifold gauge valve.
2. Open the refrigerant cylinder and add the proper refrigerant charge (shown on nameplate) into the system high side (receiver outlet valve and discharge lines quick-connect fitting).
3. If the high side does not take the entire charge, close the high side on the manifold gauge set and start the ice machine. Add the remaining refrigerant through the low side (in vapor form) until the machine is fully charged.

NOTE: If an access valve core removal and installation tool is used on any of the Schrader valves, reinstall the cores before disconnecting the access tool and hose.

4. Remove the high side low loss fitting from the access valve.
5. Open the high and low side valves on the manifold gauge set. Any refrigerant in the lines will be pulled into the low side of the system.
6. Allow the pressures to equalize while the ice machine is in the freeze cycle.
7. Remove the low side hose from the access valve and install the caps.

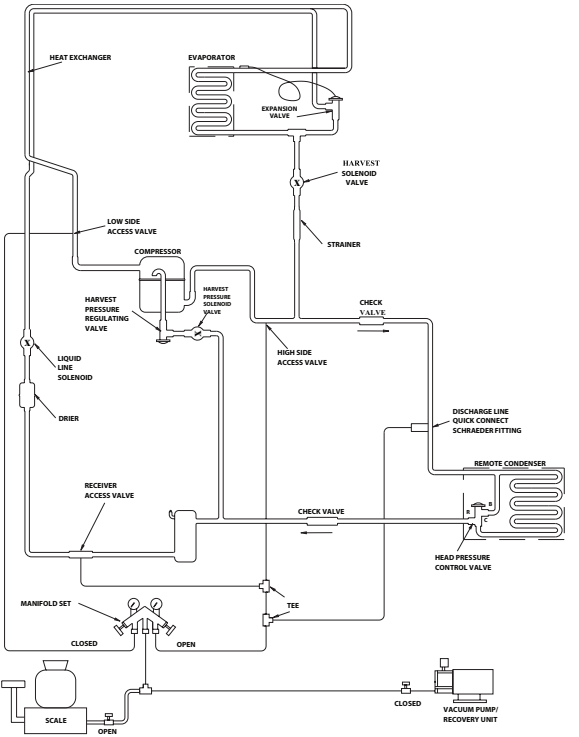

REMOTE CHARGING CONNECTIONS

System Contamination Clean-Up

General

This section describes the basic requirements for restoring contaminated systems to reliable service.

> **Important**
>
> Manitowoc Ice assumes no responsibility for the use of contaminated refrigerant. Damage resulting from the use of contaminated refrigerant is the sole responsibility of the servicing company.

DETERMINING SEVERITY OF CONTAMINATION

System contamination is generally caused by either moisture or residue from compressor burnout entering the refrigeration system.

Inspection of the refrigerant usually provides the first indication of system contamination. Obvious moisture or an acrid odor in the refrigerant indicates contamination.

If either condition is found, or if contamination is suspected, use a Total Test Kit from Totaline or a similar diagnostic tool. These devices sample refrigerant, eliminating the need to take an oil sample. Follow the manufacturer's directions.

If a refrigerant test kit indicates harmful levels of contamination, or if a test kit is not available, inspect the compressor oil.

1. Remove the refrigerant charge from the ice machine.
2. Remove the compressor from the system.
3. Check the odor and appearance of the oil.
4. Inspect open suction and discharge lines at the compressor for burnout deposits.
5. If no signs of contamination are present, perform an acid oil test.

Check the chart on the next page to determine the type of cleanup required.

Contamination Cleanup Chart	
Symptoms/Findings	**Required Cleanup Procedure**
No symptoms or suspicion of contamination	Normal evacuation/recharging procedure
Moisture/Air Contamination symptoms Refrigeration system open to atmosphere for longer than 15 minutes Refrigeration test kit and/or acid oil test shows contamination Leak in water cooled condenser No burnout deposits in open compressor lines	Mild contamination cleanup procedure
Mild Compressor Burnout symptoms Oil appears clean but smells acrid Refrigeration test kit or acid oil test shows harmful acid content No burnout deposits in open compressor lines	Mild contamination cleanup procedure
Severe Compressor Burnout symptoms Oil is discolored, acidic, and smells acrid Burnout deposits found in the compressor, lines, and other components	Severe contamination cleanup procedure

CLEANUP PROCEDURE

Mild System Contamination

1. Replace any failed components.
2. If the compressor is good, change the oil.
3. Replace the liquid line drier.

NOTE: If the contamination is from moisture, use heat lamps during evacuation. Position them at the compressor, condenser and evaporator prior to evacuation. Do not position heat lamps too close to plastic components, or they may melt or warp.

Important

Dry nitrogen is recommended for this procedure. This will prevent CFC release.

4. Follow the normal evacuation procedure, except replace the evacuation step with the following:
   A. Pull vacuum to 1000 microns. Break the vacuum with dry nitrogen and sweep the system. Pressurize to a minimum of 5 psig (35 kPa,.35 bar).
   B. Pull vacuum to 500 microns. Break the vacuum with dry nitrogen and sweep the system. Pressurize to a minimum of 5 psig (35 kPa,.35 bar).
   C. Change the vacuum pump oil.
   D. Pull vacuum to 500 microns. Run the vacuum pump for 1/2 hour on self-contained models, 1 hour on remotes.

NOTE: You may perform a standing vacuum test to make a preliminary leak check. You should use an electronic leak detector after system charging to be sure there are no leaks.

5. Charge the system with the proper refrigerant to the nameplate charge.
6. Operate the ice machine.

Severe System Contamination

1. Remove the refrigerant charge.
2. Remove the compressor and inspect the refrigeration lines. If burnout deposits are found, install a new harvest valve, replace the manifold strainer, TXV and harvest pressure regulating valve.
3. Wipe away any burnout deposits from suction and discharge lines at compressor.
4. Sweep through the open system with dry nitrogen.

Important

Refrigerant sweeps are not recommended, as they release CFCs into the atmosphere.

5. Install a new compressor and new start components.
6. Install a suction line filter-drier with acid and moisture removal capability. Place the filter drier as close to the compressor as possible.
7. Install an access valve at the inlet of the suction line drier.
8. Install a new liquid line drier.

Important

Dry nitrogen is recommended for this procedure. This will prevent CFC release.

9. Follow the normal evacuation procedure, except replace the evacuation step with the following:
   A. Pull vacuum to 1000 microns. Break the vacuum with dry nitrogen and sweep the system. Pressurize to a minimum of 5 psig (35 kPa,.35 bar).
   B. Change the vacuum pump oil.
   C. Pull vacuum to 500 microns. Break the vacuum with dry nitrogen and sweep the system. Pressurize to a minimum of 5 psig (35 kPa,.35 bar).
   D. Change the vacuum pump oil.
   E. Pull vacuum to 500 microns. Run the vacuum pump for 1/2 hour on self-contained models, 1 hour on remotes.

NOTE: You may perform a standing vacuum test to make a preliminary leak check. You should use an electronic leak detector after system charging to be sure there are no leaks.

10. Charge the system with the proper refrigerant to the nameplate charge.
11. Operate the ice machine for one hour. Then, check the pressure drop across the suction line filter-drier.
    A. If the pressure drop is less than 1 psig (7 kPa,.7 bar), the filter-drier should be adequate for complete cleanup.
    B. If the pressure drop exceeds 1 psig (7 kPa,.7 bar), change the suction line filter-drier and the liquid line drier. Repeat until the pressure drop is acceptable.
12. Operate the ice machine for 48-72 hours. Then remove the suction line drier and change the liquid line drier.
13. Follow normal evacuation procedures.

REPLACING PRESSURE CONTROLS WITHOUT REMOVING REFRIGERANT CHARGE

This procedure reduces repair time and cost. Use it when any of the following components require replacement, and the refrigeration system is operational and leak-free.

- Fan cycle control (air cooled only)
- Water regulating valve (water cooled only)
- High pressure cut-out control
- Low Pressure cut-out control
- High side service valve
- Low side service valve

Important

This is a required in-warranty repair procedure.

1. Disconnect power to the ice machine.
2. Follow all manufacturer's instructions supplied with the pinch-off tool. Position the pinch-off tool around the tubing as far from the pressure control as feasible. (See the figure on next page.) Clamp down on the tubing until the pinch-off is complete.

⚠ Warning

Do not unsolder a defective component. Cut it out of the system. Do not remove the pinch-off tool until the new component is securely in place.

3. Cut the tubing of the defective component with a small tubing cutter.
4. Solder the replacement component in place. Allow the solder joint to cool.
5. Remove the pinch-off tool.
6. Re-round the tubing. Position the flattened tubing in the proper hole in the pinch-off tool. Tighten the wing nuts until the block is tight and the tubing is rounded.

NOTE: The pressure controls will operate normally once the tubing is re-rounded. Tubing may not re-round 100%.

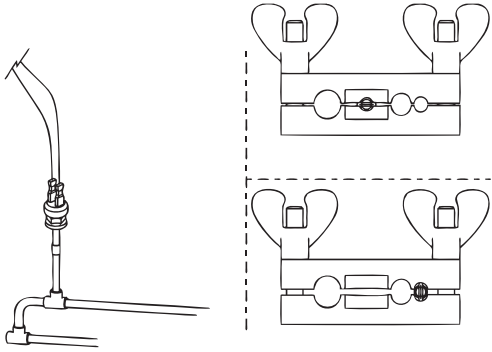

USING PINCH-OFF TOOL

LIQUID LINE FILTER-DRIERS

The filter-driers used on Manitowoc ice machines are manufactured to Manitowoc specifications.

The difference between a Manitowoc drier and an off-the-shelf drier is in filtration. A Manitowoc drier has dirt-retaining filtration, with fiberglass filters on both the inlet and outlet ends. This is very important because ice machines have a back-flushing action that takes place during every Harvest cycle.

A Manitowoc filter-drier has high moisture and acid removal capability.

The size of the filter-drier is important. The refrigerant charge is critical. Using an improperly sized filter-drier will cause the ice machine to be improperly charged with refrigerant.

Important

Driers are covered as a warranty part. The drier must be replaced any time the system is opened for repairs.

TOTAL SYSTEM REFRIGERANT CHARGE

All machines listed use R-404A refrigerant - This information is for reference only. Refer to the ice machine serial number tag to verify the system charge. Serial plate information overrides information listed on these pages.

Model	Air Cooled	Water Cooled	Remote	Additional Refrigerant for Line Sets 51'-100'	Maximum System Charge
I0300	15 oz.	12 oz.	NA	NA	NA
I0320	20 oz.	18 oz.	NA	NA	NA
I0450	20 oz.	14 oz.	NA	NA	NA
I0500	24 oz.	23 oz.	6 lb.	1.5 lb.	7.5 lb.
I0520	22 oz.	14 oz.	NA	NA	NA
I0600	32 oz.	28 oz.	6.5 lb.	1.5 lb.	7.5 lb.
I0606	32 oz	26 oz	7 lb.	2 lb.	9 lb
I0850	34 oz.	26 oz.	8.5 lb.	2 lb.	10.5 lb.
I0906	34 oz.	26 oz.	6.5 lb.	2 lb.	9.5 lb.
I1000	36 oz.	28 oz.	7 lb.	2 lb.	9 lb.
I1106	46 oz.	30 oz.	6.5 lb.	2 lb.	9.5 lb.

Model	Air Cooled	Water Cooled	Remote	Additional Refrigerant for Line Sets 51'-100'	Maximum System Charge
I1200	42 oz.	34 oz.	NA	NA	NA
I1400	52 oz.	40 oz.	11 lb.	2 lb.	13 lb.
I1406	58 oz.	40 oz.	12 lb.	2 lb.	14 lb.
I1800	52 oz.	40 oz.	12.5 lb.	2 lb.	14.5 lb.

THIS PAGE INTENTIONALLY LEFT BLANK

Cycle Times/24-Hour Ice Production/ Refrigerant Pressure Charts

These charts are used as guidelines to verify correct ice machine operation.

Accurate collection of data is essential to obtain the correct diagnosis.

- Production and cycle times are for dice cube - Half dice cube cycle times can be 2 - 3 minutes faster, depending on model and ambient temperature. Models ending in 6 (ie: ID0606A) are included in the model series cycle times & pressures.
- Regular cube production derate is 7%.
- Ice production checks that are within 10% of the chart are considered normal. This is due to variances in water and air temperature. Actual temperatures will seldom match the chart exactly.
- Refer to "Symptom #2 - Operational Analysis Table" page 126 for the list of data that must be collected for refrigeration diagnostics.
- Zero out manifold gauge set before obtaining pressure readings to avoid misdiagnosis.
- Discharge and suction pressure are highest at the beginning of the cycle. Suction pressure will drop throughout the cycle. Verify the pressures are within the range indicated.
- Record beginning of freeze cycle suction pressure one minute after water pump energizes.
- 50Hz dice and half dice production derate is 12%.
- 50Hz regular cube total production derate is 14%.

I0300 SERIES

I0300A

Self-Contained Air-Cooled Model

Characteristics vary depending on operating conditions.

CYCLE TIMES

Freeze Time + Harvest Time = Total Cycle Time

Air Temp. Entering Condenser °F/°C	Freeze Time			Harvest Time [1]
	Water Temperature °F/°C			
	50/10	70/21	90/32	
70/21	9.6-11.5	10.8-12.9	12.3-14.6	1-2.5
80/27	10.6-12.6	12.3-14.6	13.5-16.0	
90/32	11.8-14.0	13.9-16.4	15.0-17.7	
100/38	13.2-15.7	14.6-17.3	16.2-19.2	
110/43	15.0-17.7	15.8-18.7	17.7-20.9	

1 Times in minutes

24 HOUR ICE PRODUCTION

Air Temp. Entering Condenser °F/°C	Water Temperature °F/°C [1]		
	50/10	70/21	90/32
70/21	310	280	250
80/27	285	250	230
90/32	260	225	210
100/38	235	215	195
110/43	210	200	180

1 Based on average ice slab weight of 2.40 - 2.80 lb.

OPERATING PRESSURES

Air Temp Entering Condenser °F/°C	Freeze Cycle		Harvest Cycle	
	Discharge Pressure PSIG	Suction Pressure PSIG	Discharge Pressure PSIG	Suction Pressure PSIG [1]
50/10	195-245	50-20	135-160	75-100
70/21	195-260	50-20	135-165	80-110
80/27	220-290	60-24	150-170	90-120
90/32	240-320	60-25	170-195	115-135
100/38	285-370	70-28	200-220	130-155
110/43	330-415	78-32	230-250	150-175

1 Suction pressure drops gradually throughout the freeze cycle

I0300W

Self-Contained Water-Cooled Model

Characteristics vary depending on operating conditions.

CYCLE TIMES

Freeze Time + Harvest Time = Total Cycle Time

Air Temp. Around Ice Machine °F/°C	Freeze Time			Harvest Time [1]
	Water Temperature °F/°C			
	50/10	70/21	90/32	
70/21	10.0-11.9	11.1-13.2	12.3-14.6	1-2.5
80/27	10.2-12.2	11.3-13.4	12.3-14.6	
90/32	10.4-12.4	11.8-14.0	12.6-15.0	
100/38	10.6-12.6	11.8-14.0	12.6-15.7	
110/43	10.8-12.9	11.8-14.0	12.9-15.3	

1 Times in minutes

24 HOUR ICE PRODUCTION

Air Temp. Around Ice Machine °F/°C	Water Temperature °F/°C [1]		
	50/10	70/21	90/32
70/21	300	275	250
80/27	295	270	250
90/32	290	260	245
100/38	285	260	245
110/43	280	260	240

1 Based on average ice slab weight of 2.40 - 2.80 lb.

OPERATING PRESSURES

Air Temp Around Ice Machine °F/°C	Freeze Cycle		Harvest Cycle	
	Discharge Pressure PSIG	Suction Pressure PSIG	Discharge Pressure PSIG	Suction Pressure PSIG [1]
50/10	220-230	50-25	130-170	75-100
70/21	220-230	50-28	130-170	85-100
80/27	225-245	65-29	130-180	85-110
90/32	230-250	65-30	135-180	85-115
100/38	230-260	70-31	145-190	90-120
110/43	235-260	70-31	150-190	90-120

1 Suction pressure drops gradually throughout the freeze cycle
2 Water regulating valve set to maintain 220 psig
3 Condenser Water Usage = 193 gal/100 lb ice @ 90°/70°F

I0320 SERIES

I0320A

Self-Contained Air-Cooled Model

Characteristics vary depending on operating conditions.

CYCLE TIMES

Freeze Time + Harvest Time = Total Cycle Time

Air Temp. Entering Condenser °F/°C	Freeze Time			Harvest Time [1]
	Water Temperature °F/°C			
	50/10	70/21	90/32	
70/21	13.1-15.2	15.7-18.2	16.6-19.3	1-2.5
80/27	15.7-18.2	17.3-20.1	18.9-21.9	
90/32	18.1-21.0	20.3-23.5	21.3-24.6	
100/38	21.3-24.6	23.0-26.6	24.3-28.1	

1 Times in minutes

24 HOUR ICE PRODUCTION

Air Temp. Entering Condenser °F/°C	Water Temperature °F/°C [1]		
	50/10	70/21	90/32
70/21	335	285	270
80/27	285	260	240
90/32	250	225	215
100/38	215	200	190

1 Based on average ice slab weight of 3.40 - 3.90 lb.

OPERATING PRESSURES

Air Temp Entering Condenser °F/°C	Freeze Cycle		Harvest Cycle	
	Discharge Pressure PSIG	Suction Pressure PSIG	Discharge Pressure PSIG	Suction Pressure PSIG [1]
50/10	195-260	60-34	130-160	80-115
70/21	195-260	70-36	130-165	90-120
80/27	215-295	75-36	140-165	110-125
90/32	240-320	80-38	155-180	120-135
100/38	290-365	90-40	175-215	140-165
110/43	325-415	95-42	200-230	160-185

1 Suction pressure drops gradually throughout the freeze cycle

I0320W

Self-Contained Water-Cooled Model

Characteristics vary depending on operating conditions.

CYCLE TIMES

Freeze Time + Harvest Time = Total Cycle Time

Air Temp. Around Ice Machine °F/°C	Freeze Time			Harvest Time [1]
	Water Temperature °F/°C			
	50/10	70/21	90/32	
70/21	13.3-15.5	15.4-17.9	16.6-19.3	1-2.5
80/27	13.8-16.1	16.0-18.6	17.3-20.1	
90/32	14.3-16.6	16.6-19.3	18.1-21.0	
100/38	14.8-17.2	17.3-20.1	18.9-21.9	
110/43	15.4-17.9	18.1-21.0	19.5-22.9	

1 Times in minutes

24 HOUR ICE PRODUCTION

Air Temp. Around Ice Machine °F/°C	Water Temperature °F/°C [1]		
	50/10	70/21	90/32
70/21	330	290	270
80/27	320	280	260
90/32	310	270	250
100/38	300	260	240
110/43	290	250	230

1 Based on average ice slab weight of 3.40 - 3.90 lb.

OPERATING PRESSURES

Air Temp Around Ice Machine °F/°C	Freeze Cycle		Harvest Cycle	
	Discharge Pressure PSIG	Suction Pressure PSIG	Discharge Pressure PSIG	Suction Pressure PSIG [1]
50/10	220-245	60-33	140-185	85-105
70/21	220-250	60-34	140-190	90-120
80/27	235-265	75-38	145-195	90-145
90/32	250-300	80-40	145-200	100-145
100/38	250-360	85-41	175-225	110-150
110/43	250-380	90-42	200-240	120-160

1 Suction pressure drops gradually throughout the freeze cycle
2 Water regulating valve set to maintain 220 psig
3 Condenser Water Usage = 193 gal/100 lb ice @ 90°/70°F

I0450 SERIES

I0450A

Self-Contained Air-Cooled Model

Characteristics vary depending on operating conditions.

CYCLE TIMES

Freeze Time + Harvest Time = Total Cycle Time

Air Temp. Entering Condenser °F/°C	Freeze Time			Harvest Time [1]
	Water Temperature °F/°C			
	50/10	70/21	90/32	
70/21	10.2-11.9	11.1-12.9	12.1-14.1	1-2.5
80/27	11.4-13.3	12.3-14.3	13.3-15.5	
90/32	12.5-14.5	13.8-16.1	14.8-17.2	
100/38	13.8-16.1	15.4-17.9	16.6-19.3	
110/43	16.3-18.9	17.7-20.5	19.3-22.4	

1 Times in minutes

24 HOUR ICE PRODUCTION

Air Temp. Entering Condenser °F/°C	Water Temperature °F/°C [1]		
	50/10	70/21	90/32
70/21	420	390	360
80/27	380	355	330
90/32	350	320	300
100/38	320	290	270
110/43	275	255	235

1 Based on average ice slab weight of 3.40 - 3.90 lb.

OPERATING PRESSURES

Air Temp Entering Condenser °F/°C	Freeze Cycle		Harvest Cycle	
	Discharge Pressure PSIG	Suction Pressure PSIG	Discharge Pressure PSIG	Suction Pressure PSIG [1]
50/10	195-255	50-25	125-185	70-90
70/21	195-255	60-25	135-190	80-110
80/27	220-275	62-28	135-195	80-110
90/32	250-320	70-31	175-195	85-115
100/38	290-370	75-33	190-215	115-140
110/43	310-380	80-33	210-250	120-170

1 Suction pressure drops gradually throughout the freeze cycle

I0450W

Self-Contained Water-Cooled Model

Characteristics vary depending on operating conditions.

CYCLE TIMES

Freeze Time + Harvest Time = Total Cycle Time

Air Temp. Around Ice Machine °F/°C	Freeze Time			Harvest Time [1]
	Water Temperature °F/°C			
	50/10	70/21	90/32	
70/21	9.9-11.6	11.1-12.9	12.1-14.1	1-2.5
80/27	10.2-11.9	11.6-13.5	12.5-14.5	
90/32	10.3-12.0	12.1-14.1	12.9-15.0	
100/38	10.4-12.2	12.5-14.5	13.3-15.5	
110/43	10.7-12.5	12.9-15.0	14.3-16.6	

1 Times in minutes

24 HOUR ICE PRODUCTION

Air Temp. Around Ice Machine °F/°C	Water Temperature °F/°C [1]		
	50/10	70/21	90/32
70/21	430	390	360
80/27	420	375	350
90/32	415	360	340
100/38	410	350	330
110/43	400	340	310

1 Based on average ice slab weight of 3.40 - 3.90 lb.

OPERATING PRESSURES

Air Temp Around Ice Machine °F/°C	Freeze Cycle		Harvest Cycle	
	Discharge Pressure PSIG	Suction Pressure PSIG	Discharge Pressure PSIG	Suction Pressure PSIG [1]
50/10	220-230	48-28	130-160	70-95
70/21	220-240	52-28	130-160	75-100
80/27	230-240	55-29	130-160	75-110
90/32	220-240	55-30	135-160	80-115
100/38	235-240	60-30	170-205	80-120
110/43	240-240	60-30	140-205	80-120

1 Suction pressure drops gradually throughout the freeze cycle
2 Water regulating valve set to maintain 220 psig
3 Condenser Water Usage = 169 gal/100 lb ice @ 90°/70°F

I0500 SERIES

I0500A Self-Contained Air-Cooled Model

Characteristics vary depending on operating conditions.

CYCLE TIMES

Freeze Time + Harvest Time = Total Cycle Time

Air Temp. Entering Condenser °F/°C	Freeze Time			Harvest Time [1]
	Water Temperature °F/°C			
	50/10	70/21	90/32	
70/21	11.0-12.6	12.9-14.8	14.3-16.3	1-2.5
80/27	12.4-14.3	14.9-17.0	15.1-17.2	
90/32	14.5-16.5	15.5-17.7	17.4-19.9	
100/38	16.2-18.5	17.7-20.2	19.9-22.7	
110/43	18.6-21.2	20.2-22.1	22.2-25.2	

1 Times in minutes

24 HOUR ICE PRODUCTION

Air Temp. Entering Condenser °F/°C	Water Temperature °F/°C [1 2]		
	50/10	70/21	90/32
70/21	530	460	420
80/27	475	405	400
90/32	415	390	350
100/38	375	345	310
110/43	330	305	280

1 Based on average ice slab weight of 4.60 - 5.20 lb.
2 230/50/1 is approximately 12% lower than 230/60/1

OPERATING PRESSURES

Air Temp Entering Condenser °F/°C	Freeze Cycle		Harvest Cycle	
	Discharge Pressure PSIG	Suction Pressure PSIG	Discharge Pressure PSIG	Suction Pressure PSIG [1]
50/10	200-240	50-28	120-145	70-100
70/21	205-245	70-30	120-150	80-110
80/27	210-270	70-31	120-165	80-110
90/32	270-325	70-32	120-190	100-120
100/38	300-400	90-34	210-230	130-150
110/43	330-425	90-36	220-240	140-160

1 Suction pressure drops gradually throughout the freeze cycle

I0500W

Self-Contained Water-Cooled Model

Characteristics vary depending on operating conditions.

CYCLE TIMES

Freeze Time + Harvest Time = Total Cycle Time

Air Temp. Around Ice Machine °F/°C	Freeze Time			Harvest Time [1]
	Water Temperature °F/°C			
	50/10	70/21	90/32	
70/21	10.5-12.1	13.2-15.1	15.3-17.5	1-2.5
80/27	11.9-13.6	13.7-15.7	15.5-17.7	
90/32	12.3-14.1	13.9-15.9	15.7-17.9	
100/38	12.6-14.4	14.3-16.3	16.2-18.5	
110/43	12.9-14.8	14.5-16.5	16.6-19.0	

1 Times in minutes

24 HOUR ICE PRODUCTION

Air Temp. Around Ice Machine °F/°C	Water Temperature °F/°C [1]		
	50/10	70/21	90/32
70/21	550	450	395
80/27	495	435	390
90/32	480	430	385
100/38	470	420	375
110/43	460	415	365

1 Based on average ice slab weight of 4.60 - 5.20 lb.

OPERATING PRESSURES

Air Temp Around Ice Machine °F/°C	Freeze Cycle		Harvest Cycle	
	Discharge Pressure PSIG	Suction Pressure PSIG	Discharge Pressure PSIG	Suction Pressure PSIG [1]
70/21	230-240	60-33	130-150	95-120
80/27	230-240	65-33	130-160	95-120
90/32	230-250	70-33	170-190	95-120
100/38	235-250	75-33	170-190	95-120
110/43	235-250	75-33	170-190	95-120

1 Suction pressure drops gradually throughout the freeze cycle
2 Water regulating valve set to maintain 230 psig
3 Condenser Water Usage = 165 gal/100 lb ice @ 90°/70°F

I0500N

Remote Air-Cooled Condenser Model

Characteristics vary depending on operating conditions.

CYCLE TIMES

Freeze Time + Harvest Time = Total Cycle Time

Air Temp. Entering Condenser °F/°C	Freeze Time			Harvest Time [1]
	Water Temperature °F/°C			
	50/10	70/21	90/32	
-20/-29 to 70/21	12.3-14.1	12.7-14.7	13.7-15.8	0.75-2.0
90/32	12.4-14.3	13.9-15.9	14.7-17.0	
100/38	12.8-14.9	14.1-16.3	15.2-17.7	
110/43	13.3-15.4	14.5-16.7	16.0-18.5	

1 Times in minutes

24 HOUR ICE PRODUCTION

Air Temp. Entering Condenser °F/°C	Water Temperature °F/°C [1]		
	50/10	70/21	90/32
-20/-29 to 70/21	480	445	415
90/32	455	430	390
100/38	440	405	375
110/43	425	395	360

1 Based on average ice slab weight of 4.60 - 5.20 lb.

OPERATING PRESSURES

Air Temp Entering Condenser °F/°C	Freeze Cycle		Harvest Cycle	
	Discharge Pressure PSIG	Suction Pressure PSIG	Discharge Pressure PSIG	Suction Pressure PSIG [1]
50/10	205-220	50-32	100-150	75-100
70/21	240-260	60-32	110-160	75-100
80/27	240-270	60-32	110-160	75-100
90/32	250-270	60-32	120-160	80-100
100/38	300-375	85-35	130-170	80-100
110/43	310-375	90-36	130-170	80-100

1 Suction pressure drops gradually throughout the freeze cycle

I0520 SERIES

I0520A

Self-Contained Air-Cooled Model

Characteristics vary depending on operating conditions.

CYCLE TIMES

Freeze Time + Harvest Time = Total Cycle Time

Air Temp. Entering Condenser °F/°C	Freeze Time			Harvest Time [1]
	Water Temperature °F/°C			
	50/10	70/21	90/32	
70/21	8.8-10.3	10.2-11.9	11.7-13.7	1-2.5
80/27	9.9-11.6	11.4-13.3	13.8-16.1	
90/32	10.7-12.5	13.6-15.8	15.4-17.9	
100/38	12.5-14.5	14.8-17.2	16.6-19.3	
110/43	15.4-17.9	16.6-19.3	18.1-21.0	

1 Times in minutes

24 HOUR ICE PRODUCTION

Air Temp. Entering Condenser °F/°C	Water Temperature °F/°C [1]		
	50/10	70/21	90/32
70/21	475	420	370
80/27	430	380	320
90/32	400	325	290
100/38	350	300	270
110/43	290	270	250

1 Based on average ice slab weight of 3.40 - 3.90 lb.

OPERATING PRESSURES

Air Temp Entering Condenser °F/°C	Freeze Cycle		Harvest Cycle	
	Discharge Pressure PSIG	Suction Pressure PSIG	Discharge Pressure PSIG	Suction Pressure PSIG [1]
50/10	195-255	50-30	125-185	70-90
70/21	195-270	60-30	135-190	80-115
80/27	220-285	62-32	135-195	80-115
90/32	250-320	70-34	175-195	85-115
100/38	290-390	75-35	190-215	115-140
110/43	320-400	80-37	225-250	130-170

1 Suction pressure drops gradually throughout the freeze cycle

I0520W

Self-Contained Water-Cooled Model

Characteristics vary depending on operating conditions.

CYCLE TIMES

Freeze Time + Harvest Time = Total Cycle Time

Air Temp. Around Ice Machine °F/°C	Freeze Time			Harvest Time [1]
	Water Temperature °F/°C			
	50/10	70/21	90/32	
70/21	9.1-10.7	10.9-12.7	11.7-13.7	1-2.5
80/27	9.4-11.0	11.2-13.1	12.1-14.1	
90/32	9.6-11.3	11.6-13.5	12.5-14.5	
100/38	9.9-11.6	11.9-13.9	12.9-15.0	
110/43	10.2-11.9	12.3-14.3	13.3-15.5	

1 Times in minutes

24 HOUR ICE PRODUCTION

Air Temp. Around Ice Machine °F/°C	Water Temperature °F/°C [1]		
	50/10	70/21	90/32
70/21	460	395	370
80/27	450	385	360
90/32	440	375	350
100/38	430	365	340
110/43	420	355	330

1 Based on average ice slab weight of 3.4 - 3.9 lb.

OPERATING PRESSURES

Air Temp Around Ice Machine °F/°C	Freeze Cycle		Harvest Cycle	
	Discharge Pressure PSIG	Suction Pressure PSIG	Discharge Pressure PSIG	Suction Pressure PSIG [1]
70/21	230-250	52-30	160-190	85-100
80/27	225-265	56-30	170-190	90-110
90/32	225-270	62-31	170-195	95-115
100/38	225-275	65-32	170-205	100-102
110/43	235-280	65-32	170-205	100-120

1 Suction pressure drops gradually throughout the freeze cycle
2 Water regulating valve set to maintain 220 psig
3 Condenser Water Usage = 190 gal/100 lb ice @ 90°/70°F

I0600 SERIES

I0600A

Self-Contained Air-Cooled Model

Characteristics vary depending on operating conditions.

CYCLE TIMES

Freeze Time + Harvest Time = Total Cycle Time

Air Temp. Entering Condenser °F/°C	Freeze Time			Harvest Time [1]
	Water Temperature °F/°C			
	50/10	70/21	90/32	
70/21	7.6-9.0	9.5-11.2	10.2-12.0	1-2.5
80/27	8.8-10.4	9.9-11.7	10.5-12.3	
90/32	9.7-11.4	11.0-12.9	11.4-13.4	
100/38	11.1-13.1	12.3-14.4	12.8-15.0	

1 Times in minutes

24 HOUR ICE PRODUCTION

Air Temp. Entering Condenser °F/°C	Water Temperature °F/°C [1]		
	50/10	70/21	90/32
70/21	650	540	505
80/27	575	520	495
90/32	530	475	460
100/38	470	430	415

1 Based on average ice slab weight of 4.12 - 4.75 lb.

OPERATING PRESSURES

Air Temp Entering Condenser °F/°C	Freeze Cycle		Harvest Cycle	
	Discharge Pressure PSIG	Suction Pressure PSIG	Discharge Pressure PSIG	Suction Pressure PSIG [1]
50/10	220-255	45-27	140-160	60-80
70/21	220-270	45-28	145-170	70-90
80/27	230-300	50-30	165-185	75-95
90/32	265-345	54-32	180-215	80-105
100/38	300-395	60-35	210-245	85-120
110/43	340-430	65-39	240-280	100-140

1 Suction pressure drops gradually throughout the freeze cycle

I0600W

Self-Contained Water-Cooled Model

Characteristics vary depending on operating conditions.

CYCLE TIMES

Freeze Time + Harvest Time = Total Cycle Time

Air Temp. Around Ice Machine °F/°C	Freeze Time			Harvest Time [1]
	Water Temperature °F/°C			
	50/10	70/21	90/32	
70/21	7.6-9.0	9.0-10.6	9.7-11.4	1-2.5
80/27	8.8-10.4	9.1-10.7	9.9-11.7	
90/32	9.6-10.6	9.1-10.7	9.9-11.7	
100/38	9.1-10.7	9.5-11.2	10.2-12.0	

1 Times in minutes

24 HOUR ICE PRODUCTION

Air Temp. Around Ice Machine °F/°C	Water Temperature °F/°C [1]		
	50/10	70/21	90/32
70/21	650	565	530
80/27	575	560	520
90/32	565	560	520
100/38	560	540	505

1 Based on average ice slab weight of 4.12 - 4.75 lb.

OPERATING PRESSURES

Air Temp Around Ice Machine °F/°C	Freeze Cycle		Harvest Cycle	
	Discharge Pressure PSIG	Suction Pressure PSIG	Discharge Pressure PSIG	Suction Pressure PSIG [1]
50/10	240-250	36-26	140-190	65-95
70/21	240-250	36-26	140-190	65-95
80/27	240-250	40-28	150-195	70-100
90/32	245-255	40-29	160-200	70-100
100/38	245-260	40-30	170-205	75-105
110/43	245-265	40-30	180-210	80-110

1 Suction pressure drops gradually throughout the freeze cycle
2 Water regulating valve set to maintain 240 psig
3 Condenser Water Usage = 157 gal/100 lb ice @ 90°/70°F

I0600N

Remote Air-Cooled Condenser Model

Characteristics vary depending on operating conditions.

CYCLE TIMES

Freeze Time + Harvest Time = Total Cycle Time

Air Temp. Entering Condenser °F/°C	Freeze Time			Harvest Time [1]
	Water Temperature °F/°C			
	50/10	70/21	90/32	
-20/-29 to 70/21	7.9-9.4	9.9-11.7	10.5-12.3	1-2.5
80/27	9.0-10.6	9.9-11.7	10.7-12.6	
90/32	9.1-10.7	9.9-11.7	10.7-12.6	
100/38	9.9-11.7	10.9-12.8	11.7-13.7	
110/43	10.9-12.8	12.0-14.0	12.8-15.0	

1 Times in minutes

24 HOUR ICE PRODUCTION

Air Temp. Entering Condenser °F/°C	Water Temperature °F/°C [1]		
	50/10	70/21	90/32
-20/-29 to 70/21	630	520	495
80/27	565	520	485
90/32	560	520	485
100/38	520	480	450
110/43	480	440	415

1 Based on average ice slab weight of 4.12 - 4.75 lb.
2 Ratings with JC0895 condenser dice cubes

OPERATING PRESSURES

Air Temp Entering Condenser °F/°C	Freeze Cycle		Harvest Cycle	
	Discharge Pressure PSIG	Suction Pressure PSIG	Discharge Pressure PSIG	Suction Pressure PSIG [1]
-20/-29 to 50/10	210-240	40-29	130-190	62-80
70/21	225-250	50-30	130-200	75-95
80/27	245-275	52-31	130-200	75-100
90/32	245-285	52-32	135-200	80-100
100/38	260-315	55-32	140-200	80-100
110/43	290-365	60-34	170-200	85-100

1 Suction pressure drops gradually throughout the freeze cycle

I0606A

Self-Contained Air-Cooled Model

Characteristics vary depending on operating conditions.

CYCLE TIMES

Freeze Time + Harvest Time = Total Cycle Time

Air Temp. Entering Condenser °F/°C	Freeze Time			Harvest Time [1]
	Water Temperature °F/°C			
	50/10	70/21	90/32	
70/21	7.6-9.0	9.5-11.2	10.2-12.0	1-2.5
80/27	8.8-10.4	9.9-11.7	10.5-12.3	
90/32	9.7-11.4	11.0-12.9	11.4-13.4	
100/38	11.1-13.1	12.3-14.4	12.8-15.0	

1 Times in minutes

24 HOUR ICE PRODUCTION

Air Temp. Entering Condenser °F/°C	Water Temperature °F/°C [1]		
	50/10	70/21	90/32
70/21	650	540	505
80/27	575	520	495
90/32	530	475	460
100/38	470	430	415

1 Based on average ice slab weight of 4.12 - 4.75 lb.

OPERATING PRESSURES

Air Temp Entering Condenser °F/°C	Freeze Cycle		Harvest Cycle	
	Discharge Pressure PSIG	Suction Pressure PSIG	Discharge Pressure PSIG	Suction Pressure PSIG [1]
50/10	220-255	45-27	140-160	60-80
70/21	220-270	45-28	145-170	70-90
80/27	230-300	50-30	165-185	75-95
90/32	265-345	54-32	180-215	80-105
100/38	300-395	60-35	210-245	85-120
110/43	340-430	65-39	240-280	100-140

1 Suction pressure drops gradually throughout the freeze cycle

I0606W

Self-Contained Water-Cooled Model

Characteristics vary depending on operating conditions.

CYCLE TIMES

Freeze Time + Harvest Time = Total Cycle Time

Air Temp. Around Ice Machine °F/°C	Freeze Time			Harvest Time [1]
	Water Temperature °F/°C			
	50/10	70/21	90/32	
70/21	7.6-9.0	9.0-10.6	9.7-11.4	1-2.5
80/27	8.8-10.4	9.1-10.7	9.9-11.7	
90/32	9.6-10.6	9.1-10.7	9.9-11.7	
100/38	9.1-10.7	9.5-11.2	10.2-12.0	

1 Times in minutes

24 HOUR ICE PRODUCTION

Air Temp. Around Ice Machine °F/°C	Water Temperature °F/°C [1]		
	50/10	70/21	90/32
70/21	650	565	530
80/27	575	560	520
90/32	565	560	520
100/38	560	540	505

1 Based on average ice slab weight of 4.12 - 4.75 lb.

OPERATING PRESSURES

Air Temp Around Ice Machine °F/°C	Freeze Cycle		Harvest Cycle	
	Discharge Pressure PSIG	Suction Pressure PSIG	Discharge Pressure PSIG	Suction Pressure PSIG [1]
50/10	240-250	36-26	140-190	65-95
70/21	240-250	36-26	140-190	65-95
80/27	240-250	40-28	150-195	70-100
90/32	245-255	40-29	160-200	70-100
100/38	245-260	40-30	170-205	75-105
110/43	245-265	40-30	180-210	80-110

1 Suction pressure drops gradually throughout the freeze cycle
2 Water regulating valve set to maintain 240 psig
3 Condenser Water Usage = 157 gal/100 lb ice @ 90°/70°F

I0606N

Remote Air-Cooled Condenser Model

Characteristics vary depending on operating conditions.

CYCLE TIMES

Freeze Time + Harvest Time = Total Cycle Time

Air Temp. Entering Condenser °F/°C	Freeze Time			Harvest Time [1]
	Water Temperature °F/°C			
	50/10	70/21	90/32	
-20/-29 to 70/21	7.9-9.4	9.9-11.7	10.5-12.3	1-2.5
80/27	9.0-10.6	9.9-11.7	10.7-12.6	
90/32	9.1-10.7	9.9-11.7	10.7-12.6	
100/38	9.9-11.7	10.9-12.8	11.7-13.7	
110/43	10.9-12.8	12.30-14.0	12.8-15.0	

1 Times in minutes

24 HOUR ICE PRODUCTION

Air Temp. Entering Condenser °F/°C	Water Temperature °F/°C [1 2]		
	50/10	70/21	90/32
-20/-29 to 70/21	630	520	495
80/27	565	520	485
90/32	560	520	485
100/38	520	480	450
110/43	480	440	415

1 Based on average ice slab weight of 4.12 - 4.75 lb.
2 Ratings with JC0895 condenser dice cubes

OPERATING PRESSURES

Air Temp Entering Condenser °F/°C	Freeze Cycle		Harvest Cycle	
	Discharge Pressure PSIG	Suction Pressure PSIG	Discharge Pressure PSIG	Suction Pressure PSIG [1]
-20/-29 to 50/10	210-240	40-29	130-190	62-80
70/21	225-250	50-30	130-200	75-95
80/27	245-275	52-31	130-200	75-100
90/32	245-285	52-32	135-200	80-100
100/38	260-315	55-32	140-200	80-100
110/43	290-365	60-34	170-200	85-100

1 Suction pressure drops gradually throughout the freeze cycle

I0850 SERIES

I0850A

Self-Contained Air-Cooled Model

Characteristics vary depending on operating conditions.

CYCLE TIMES

Freeze Time + Harvest Time = Total Cycle Time

Air Temp. Entering Condenser °F/°C	Freeze Time			Harvest Time [1]
	Water Temperature °F/°C			
	50/10	70/21	90/32	
70/21	9.0-10.4	9.8-11.2	10.5-12.1	1-2.5
80/27	10.1-11.6	10.8-12.4	11.6-13.4	
90/32	11.3-13.0	12.9-14.8	12.9-14.8	
100/38	12.9-14.8	13.7-15.7	14.6-16.7	
110/43	14.9-17.0	15.8-18.0	16.5-18.8	

1 Times in minutes

24 HOUR ICE PRODUCTION

Air Temp. Entering Condenser °F/°C	Water Temperature °F/°C [1]		
	50/10	70/21	90/32
70/21	785	735	690
80/27	715	675	630
90/32	645	575	575
100/38	575	545	515
110/43	505	480	460

1 Based on average ice slab weight of 5.75 - 6.50 lb.

OPERATING PRESSURES

Air Temp Entering Condenser °F/°C	Freeze Cycle		Harvest Cycle	
	Discharge Pressure PSIG	Suction Pressure PSIG	Discharge Pressure PSIG	Suction Pressure PSIG [1]
50/10	200-255	45-25	125-140	70-90
70/21	200-255	45-26	125-140	75-90
80/27	250-275	50-28	130-160	80-100
90/32	315-260	55-30	160-175	90-115
100/38	330-385	75-34	200-225	130-160
110/43	335-400	78-35	200-230	130-160

1 Suction pressure drops gradually throughout the freeze cycle

I0850W

Self-Contained Water-Cooled Model

Characteristics vary depending on operating conditions.

CYCLE TIMES

Freeze Time + Harvest Time = Total Cycle Time

Air Temp. Around Ice Machine °F/°C	Freeze Time			Harvest Time [1]
	Water Temperature °F/°C			
	50/10	70/21	90/32	
70/21	8.4-9.7	9.5-10.9	10.7-12.3	1-2.5
80/27	8.7-10.1	9.7-11.1	10.8-12.6	
90/32	9.1-10.5	11.4-13.1	11.0-12.8	
100/38	9.5-10.9	10.3-11.9	11.3-13.0	

1 Times in minutes

24 HOUR ICE PRODUCTION

Air Temp. Around Ice Machine °F/°C	Water Temperature °F/°C [1]		
	50/10	70/21	90/32
70/21	835	755	680
80/27	810	740	665
90/32	780	640	655
100/38	755	700	645
110/43	730	680	635

1 Based on average ice slab weight of 5.75 - 6.50 lb.

OPERATING PRESSURES

Air Temp Around Ice Machine °F/°C	Freeze Cycle		Harvest Cycle	
	Discharge Pressure PSIG	Suction Pressure PSIG	Discharge Pressure PSIG	Suction Pressure PSIG [1]
50/10	230-240	45-28	135-160	70-85
70/21	230-240	60-28	135-160	70-85
80/27	230-240	65-28	135-160	70-85
90/32	240-250	65-28	135-160	70-90
100/38	240-255	70-30	140-160	75-95
110/43	240-265	70-32	140-160	75-95

1 Suction pressure drops gradually throughout the freeze cycle
2 Water regulating valve set to maintain 230 psig
3 Condenser Water Usage = 150 gal/100 lb ice @ 90°/70°F

I0850N

Remote Air-Cooled Condenser Model

Characteristics vary depending on operating conditions.

CYCLE TIMES

Freeze Time + Harvest Time = Total Cycle Time

Air Temp. Entering Condenser °F/°C	Freeze Time			Harvest Time [1]
	Water Temperature °F/°C			
	50/10	70/21	90/32	
-20/-29 to 70/21	95-11.0	11.0-12.6	12.0-13.7	0.75-2.0
80/27	10.0-11.5	10.8-12.4	11.2-12.9	
90/32	11.3-13.0	12.1-13.8	13.4-15.4	
100/38	12.0-13.7	13.0-14.9	14.1-16.2	
110/43	12.8-14.6	13.8-15.8	14.9-17.0	

1 Times in minutes

24 HOUR ICE PRODUCTION

Air Temp. Entering Condenser °F/°C	Water Temperature °F/°C [1]		
	50/10	70/21	90/32
-20/-29 to 70/21	750	665	615
80/27	720	675	650
90/32	645	610	555
100/38	615	570	530
110/43	580	540	505

1 Based on average ice slab weight of 5.75 - 6.50 lb.

OPERATING PRESSURES

Air Temp Entering Condenser °F/°C	Freeze Cycle		Harvest Cycle	
	Discharge Pressure PSIG	Suction Pressure PSIG	Discharge Pressure PSIG	Suction Pressure PSIG [1]
50/10	200-220	40-21	140-160	70-85
70/21	225-250	50-30	140-160	70-90
80/27	250-265	55-31	140-160	70-95
90/32	260-295	60-32	140-160	70-95
100/38	310-375	65-35	145-170	75-100
110/43	325-390	70-36	145-170	80-100

1 Suction pressure drops gradually throughout the freeze cycle

I0906 SERIES

I0906A

Self-Contained Air-Cooled Model

Characteristics vary depending on operating conditions.

CYCLE TIMES

Freeze Time + Harvest Time = Total Cycle Time

Air Temp. Entering Condenser °F/°C	Freeze Time			Harvest Time [1]
	Water Temperature °F/°C			
	50/10	70/21	90/32	
70/21	8.7-10.3	10.2-12.1	10.8-12.8	1-2.5
80/27	9.7-11.5	10.5-12.4	11.1-13.1	
90/32	10.5-12.4	11.9-14.1	12.2-14.5	
100/38	11.3-13.4	12.3-14.6	12.7-15.0	

1 Times in minutes

24 HOUR ICE PRODUCTION

Air Temp. Entering Condenser °F/°C	Water Temperature °F/°C [1]		
	50/10	70/21	90/32
70/21	875	765	725
80/27	800	745	710
90/32	745	665	650
100/38	695	645	630

1 Based on average ice slab weight of 6.2 - 7.2 lb.

OPERATING PRESSURES

Air Temp Entering Condenser °F/°C	Freeze Cycle		Harvest Cycle	
	Discharge Pressure PSIG	Suction Pressure PSIG	Discharge Pressure PSIG	Suction Pressure PSIG [1]
50/10	220-255	45-27	125-140	60-80
70/21	220-270	45-30	150-160	75-90
80/27	230-300	50-30	150-160	80-100
90/32	260-315	55-32	160-175	90-115
100/38	300-395	74-34	180-220	130-160
110/43	320-400	78-34	200-230	130-160

1 Suction pressure drops gradually throughout the freeze cycle

I0906W

Self-Contained Water-Cooled Model

Characteristics vary depending on operating conditions.

CYCLE TIMES

Freeze Time + Harvest Time = Total Cycle Time

Air Temp. Around Ice Machine °F/°C	Freeze Time			Harvest Time [1]
	Water Temperature °F/°C			
	50/10	70/21	90/32	
70/21	9.1-10.8	10.3-12.2	10.9-12.9	1-2.5
80/27	10.2-12.1	10.4-12.3	11.1-13.1	
90/32	10.4-12.3	11.3-13.3	11.4-13.5	
100/38	11.6-12.5	11.6-13.7	11.9-14.1	
110/43	11.3-13.3	12.2-14.5	13.0-15.4	

1 Times in minutes

24 HOUR ICE PRODUCTION

Air Temp. Around Ice Machine °F/°C	Water Temperature °F/°C [1]		
	50/10	70/21	90/32
70/21	840	755	720
80/27	765	750	710
90/32	750	700	690
100/38	740	680	665
110/43	700	650	615

1 Based on average ice slab weight of 6.2 - 7.2 lb.

OPERATING PRESSURES

Air Temp Around Ice Machine °F/°C	Freeze Cycle		Harvest Cycle	
	Discharge Pressure PSIG	Suction Pressure PSIG	Discharge Pressure PSIG	Suction Pressure PSIG [1]
50/10	225-235	45-28	130-160	75-90
70/21	225-235	45-30	130-160	75-90
80/27	230-245	50-30	130-160	75-90
90/32	225-235	55-31	130-160	75-90
100/38	235-250	55-32	135-160	75-95
110/43	235-265	60-32	140-160	75-95

1 Suction pressure drops gradually throughout the freeze cycle
2 Water regulating valve set to maintain 230 psig
3 Condenser Water Usage = 141 gal/100 lb ice @ 90°/70°F

I0906N

Remote Air-Cooled Condenser Model

Characteristics vary depending on operating conditions.

CYCLE TIMES

Freeze Time + Harvest Time = Total Cycle Time

Air Temp. Entering Condenser °F/°C	Freeze Time			Harvest Time [1]
	Water Temperature °F/°C			
	50/10	70/21	90/32	
-20/-29 to 70/21	9.4-11.1	10.2-12.1	11.0-12.9	0.75-2.0
80/27	9.8-11.6	10.4-12.3	11.3-13.3	
90/32	10.4-12.3	10.7-12.7	11.7-13.9	
100/38	10.9-12.9	11.6-13.7	12.2-14.5	
110/43	11.5-13.6	12.2-14.5	13.0-15.4	

1 Times in minutes

24 HOUR ICE PRODUCTION

Air Temp. Entering Condenser °F/°C	Water Temperature °F/°C [1]		
	50/10	70/21	90/32
-20/-29 to 70/21	820	765	720
80/27	790	750	700
90/32	750	730	675
100/38	720	680	650
110/43	685	650	615

1 Based on average ice slab weight of 6.2 - 7.2 lb.

OPERATING PRESSURES

Air Temp Entering Condenser °F/°C	Freeze Cycle		Harvest Cycle	
	Discharge Pressure PSIG	Suction Pressure PSIG	Discharge Pressure PSIG	Suction Pressure PSIG [1]
50/10	240-260	60-30	120-145	70-90
70/21	245-260	60-30	120-145	75-90
80/27	245-270	60-31	120-145	75-90
90/32	250-285	60-32	125-145	75-95
100/38	285-350	65-34	135-165	75-100
110/43	310-375	70-36	145-170	75-100

1 Suction pressure drops gradually throughout the freeze cycle

I1000 SERIES

I1000A

Self-Contained Air-Cooled Model

Characteristics vary depending on operating conditions.

CYCLE TIMES

Freeze Time + Harvest Time = Total Cycle Time

Air Temp. Entering Condenser °F/°C	Freeze Time			Harvest Time [1]
	Water Temperature °F/°C			
	50/10	70/21	90/32	
70/21	7.5-9.0	8.2-9.8	8.8-10.4	0.75-2.0
80/27	8.4-10.0	9.3-11.0	9.9-11.8	
90/32	9.5-11.3	10.6-12.6	11.4-13.5	
100/38	10.7-12.7	11.9-14.1	12.9-15.2	
110/43	12.2-14.5	13.4-15.8	14.7-17.4	

1 Times in minutes

24 HOUR ICE PRODUCTION

Air Temp. Entering Condenser °F/°C	Water Temperature °F/°C [1 2]		
	50/10	70/21	90/32
70/21	990	920	870
80/27	900	830	780
90/32	810	735	690
100/38	730	665	620
110/43	650	600	550

1 Based on average ice slab weight of 6.2 - 7.2 lb.
2 230/50/1 is approximately 12% lower than 230/60/1

OPERATING PRESSURES

Air Temp Entering Condenser °F/°C	Freeze Cycle		Harvest Cycle	
	Discharge Pressure PSIG	Suction Pressure PSIG	Discharge Pressure PSIG	Suction Pressure PSIG [1]
50/10	195-255	45-26	130-145	70-90
70/21	220-275	50-27	130-145	70-90
80/27	235-290	50-28	150-165	75-95
90/32	265-330	55-30	165-185	85-110
100/38	300-360	60-35	180-210	95-120
110/43	330-415	60-37	215-235	115-145

1 Suction pressure drops gradually throughout the freeze cycle

I1000W

Self-Contained Water-Cooled Model

Characteristics vary depending on operating conditions.

CYCLE TIMES

Freeze Time + Harvest Time = Total Cycle Time

Air Temp. Around Ice Machine °F/°C	Freeze Time			Harvest Time [1]
	Water Temperature °F/°C			
	50/10	70/21	90/32	
70/21	7.4-8.9	8.5-10.1	9.4-11.1	0.75-2.0
90/32	7.8-9.3	8.9-10.6	9.7-11.5	
100/38	7.9-9.4	9.1-10.8	9.8-11.6	
110/43	8.0-9.5	8.0-10.9	9.9-11.8	

1 Times in minutes

24 HOUR ICE PRODUCTION

Air Temp. Around Ice Machine °F/°C	Water Temperature °F/°C [1]		
	50/10	70/21	90/32
70/21	1000	895	820
80/27	980	875	810
90/32	960	855	800
100/38	950	845	790
110/43	940	835	780

1 Based on average ice slab weight of 6.2 - 7.2 lb.

OPERATING PRESSURES

Air Temp Around Ice Machine °F/°C	Freeze Cycle		Harvest Cycle	
	Discharge Pressure PSIG	Suction Pressure PSIG	Discharge Pressure PSIG	Suction Pressure PSIG [1]
50/10	215-225	45-22	145-170	75-85
70/21	215-225	45-23	150-170	75-90
80/27	220-225	45-24	150-175	75-95
90/32	220-230	45-25	155-175	80-100
100/38	230-250	50-26	160-195	80-110
110/43	240-260	50-27	170-200	80-115

1 Suction pressure drops gradually throughout the freeze cycle
2 Water regulating valve set to maintain 220 psig
3 Condenser Water Usage = 180 gal/100 lb ice @ 90°/70°F

I1000N

Remote Air-Cooled Condenser Model

Characteristics vary depending on operating conditions.

CYCLE TIMES

Freeze Time + Harvest Time = Total Cycle Time

Air Temp. Entering Condenser °F/°C	Freeze Time			Harvest Time [1]
	Water Temperature °F/°C			
	50/10	70/21	90/32	
70/21	7.7-9.2	8.6-10.3	9.5-11.3	0.75-2.0
80/27	8.5-10.1	9.5-11.3	10.4-12.3	
90/32	9.5-11.3	10.6-12.6	11.4-13.5	
100/38	10.7-12.7	11.6-13.8	12.4-14.7	
110/43	12.2-14.5	12.7-15.0	13.6-16.1	

1 Times in minutes

24 HOUR ICE PRODUCTION

Air Temp. Entering Condenser °F/°C	Water Temperature °F/°C [1]		
	50/10	70/21	90/32
70/21	960	870	800
80/27	880	800	740
90/32	800	725	680
100/38	720	670	630
110/43	640	620	580

1 Based on average ice slab weight of 6.2 - 7.2 lb.

OPERATING PRESSURES

Air Temp Entering Condenser °F/°C	Freeze Cycle		Harvest Cycle	
	Discharge Pressure PSIG	Suction Pressure PSIG	Discharge Pressure PSIG	Suction Pressure PSIG [1]
50/10	200-220	35-22	100-165	70-85
70/21	220-260	40-24	100-170	70-90
80/27	245-285	45-25	100-170	70-95
90/32	250-300	50-27	100-170	70-95
100/38	285-330	60-32	130-180	75-100
110/43	300-375	60-32	130-190	80-100

1 Suction pressure drops gradually throughout the freeze cycle

I1106 SERIES

I1106A

Self-Contained Air-Cooled Model

Characteristics vary depending on operating conditions.

CYCLE TIMES

Freeze Time + Harvest Time = Total Cycle Time

Air Temp. Entering Condenser °F/°C	Freeze Time			Harvest Time [1]
	Water Temperature °F/°C			
	50/10	70/21	90/32	
70/21	7.5-9.0	8.2-9.8	8.8-10.4	0.75-2.0
80/27	8.4-10.0	9.3-11.0	9.9-11.8	
90/32	9.5-11.3	10.6-12.6	11.4-13.5	
100/38	10.7-12.7	11.9-14.1	12.9-15.2	
110/43	12.2-14.5	13.4-15.8	14.7-17.4	

1 Times in minutes

24 HOUR ICE PRODUCTION

Air Temp. Entering Condenser °F/°C	Water Temperature °F/°C [1 2]		
	50/10	70/21	90/32
70/21	990	920	870
80/27	900	830	780
90/32	810	735	690
100/38	730	665	620
110/43	650	600	550

1 Based on average ice slab weight of 6.2 - 7.2 lb.
2 230/50/1 is approximately 12% lower than 230/60/1

OPERATING PRESSURES

Air Temp Entering Condenser °F/°C	Freeze Cycle		Harvest Cycle	
	Discharge Pressure PSIG	Suction Pressure PSIG	Discharge Pressure PSIG	Suction Pressure PSIG [1]
50/10	195-255	45-26	130-145	70-90
70/21	220-275	50-27	130-145	70-90
80/27	235-290	50-28	150-165	75-95
90/32	265-330	55-30	165-185	85-110
100/38	300-360	60-35	180-210	95-120
110/43	330-415	60-37	215-235	115-145

1 Suction pressure drops gradually throughout the freeze cycle

I1106W

Self-Contained Water-Cooled Model

Characteristics vary depending on operating conditions.

CYCLE TIMES

Freeze Time + Harvest Time = Total Cycle Time

Air Temp. Around Ice Machine °F/°C	Freeze Time			Harvest Time [1]
	Water Temperature °F/°C			
	50/10	70/21	90/32	
70/21	7.4-8.9	8.5-10.1	9.4-11.1	0.75-2.0
90/32	7.8-9.3	8.9-10.6	9.7-11.5	
100/38	7.9-9.4	9.1-10.8	9.8-11.6	
110/43	8.0-9.5	8.0-10.9	9.9-11.8	

1 Times in minutes

24 HOUR ICE PRODUCTION

Air Temp. Around Ice Machine °F/°C	Water Temperature °F/°C [1]		
	50/10	70/21	90/32
70/21	1000	895	820
80/27	980	875	810
90/32	960	855	800
100/38	950	845	790
110/43	940	835	780

1 Based on average ice slab weight of 6.2 - 7.2 lb.

OPERATING PRESSURES

Air Temp Around Ice Machine °F/°C	Freeze Cycle		Harvest Cycle	
	Discharge Pressure PSIG	Suction Pressure PSIG	Discharge Pressure PSIG	Suction Pressure PSIG [1]
50/10	215-225	45-22	145-170	75-85
70/21	215-225	45-23	150-170	75-90
80/27	220-225	45-24	150-175	75-95
90/32	220-230	45-25	155-175	80-100
100/38	230-250	50-26	160-195	80-110
110/43	240-260	50-27	170-200	80-115

1 Suction pressure drops gradually throughout the freeze cycle
2 Water regulating valve set to maintain 220 psig
3 Condenser Water Usage = 180 gal/100 lb ice @ 90°/70°F

I1106N

Remote Air-Cooled Condenser Model

Characteristics vary depending on operating conditions.

CYCLE TIMES

Freeze Time + Harvest Time = Total Cycle Time

Air Temp. Entering Condenser °F/°C	Freeze Time			Harvest Time [1]
	Water Temperature °F/°C			
	50/10	70/21	90/32	
70/21	7.7-9.2	8.6-10.3	9.5-11.3	0.75-2.0
80/27	8.5-10.1	9.5-11.3	10.4-12.3	
90/32	9.5-11.3	10.6-12.6	11.4-13.5	
100/38	10.7-12.7	11.6-13.8	12.4-14.7	
110/43	12.2-14.5	12.7-15.0	13.6-16.1	

1 Times in minutes

24 HOUR ICE PRODUCTION

Air Temp. Entering Condenser °F/°C	Water Temperature °F/°C [1]		
	50/10	70/21	90/32
70/21	960	870	800
80/27	880	800	740
90/32	800	725	680
100/38	720	670	630
110/43	640	620	580

1 Based on average ice slab weight of 6.2 - 7.2 lb.

OPERATING PRESSURES

Air Temp Entering Condenser °F/°C	Freeze Cycle		Harvest Cycle	
	Discharge Pressure PSIG	Suction Pressure PSIG	Discharge Pressure PSIG	Suction Pressure PSIG [1]
50/10	200-220	35-22	100-165	70-85
70/21	220-260	40-24	100-170	70-90
80/27	245-285	45-25	100-170	70-95
90/32	250-300	50-27	100-170	70-95
100/38	285-330	60-32	130-180	75-100
110/43	300-375	60-32	130-190	80-100

1 Suction pressure drops gradually throughout the freeze cycle

I1200 SERIES

I1200A

Self-Contained Air-Cooled Condenser Model

Characteristics vary depending on operating conditions.

CYCLE TIMES

Freeze Time + Harvest Time = Total Cycle Time

Air Temp. Entering Condenser °F/°C	Freeze Time			Harvest Time [1]
	Water Temperature °F/°C			
	50/10	70/21	90/32	
70/21	8.3-9.2	8.9-9.9	9.7-10.7	0.75-2.0
80/27	9.2-10.2	9.9-10.9	10.6-11.8	
90/32	10.2-11.3	10.9-12.1	11.8-13.1	
100/38	11.4-12.6	12.3-13.5	13.3-14.7	
110/43	12.9-14.2	13.9-15.4	15.1-16.7	

1 Times in minutes

24 HOUR ICE PRODUCTION

Air Temp. Entering Condenser °F/°C	Water Temperature °F/°C [1 2]		
	50/10	70/21	90/32
70/21	1100	1035	965
80/27	1010	950	890
90/32	925	870	810
100/38	840	785	730
110/43	750	700	650

1 Based on average ice slab weight of 7.5 - 8.2 lb.
2 230/50/1 is approximately 12% lower than 230/60/1

OPERATING PRESSURES

Air Temp Entering Condenser °F/°C	Freeze Cycle		Harvest Cycle	
	Discharge Pressure PSIG	Suction Pressure PSIG	Discharge Pressure PSIG	Suction Pressure PSIG [1]
50/10	195-255	40-20	135-155	65-85
70/21	220-280	50-22	140-180	70-90
80/27	240-300	50-24	155-180	75-95
90/32	265-340	55-25	165-200	85-100
100/38	310-390	60-28	200-215	95-110
110/43	340-430	60-30	200-240	105-125

1 Suction pressure drops gradually throughout the freeze cycle

I1200W

Self-Contained Water-Cooled Model

Characteristics vary depending on operating conditions.

CYCLE TIMES

Freeze Time + Harvest Time = Total Cycle Time

Air Temp. Around Ice Machine °F/°C	Freeze Time			Harvest Time [1]
	Water Temperature °F/°C			
	50/10	70/21	90/32	
70/21	7.8-8.6	8.8-9.7	10.1-11.1	0.75-2.0
80/27	8.9-9.9	10.1-11.1	11.5-12.7	
90/32	9.0-10.0	10.5-11.6	11.6-12.8	
100/38	9.1-10.1	10.3-12.1	11.7-12.9	
110/43	9.2-10.2	11.1-12.2	11.8-13.0	

1 Times in minutes

24 HOUR ICE PRODUCTION

Air Temp. Around Ice Machine °F/°C	Water Temperature °F/°C [1 2]		
	50/10	70/21	90/32
70/21	1165	1050	935
80/27	1040	935	830
90/32	1030	900	825
100/38	1020	870	820
110/43	1010	860	815

1 Based on average ice slab weight of 7.5 - 8.2 lb.

OPERATING PRESSURES

Air Temp Around Ice Machine °F/°C	Freeze Cycle		Harvest Cycle	
	Discharge Pressure PSIG	Suction Pressure PSIG	Discharge Pressure PSIG	Suction Pressure PSIG [1]
50/10	225-230	40-20	150-175	70-85
70/21	225-230	42-20	150-185	70-90
80/27	230-250	44-22	160-190	80-95
90/32	240-270	45-22	170-195	80-105
100/38	240-280	50-22	175-205	85-110
110/43	240-280	50-23	180-215	85-115

1 Suction pressure drops gradually throughout the freeze cycle
2 Water regulating valve set to maintain 220 psig
3 Condenser Water Usage = 169 gal/100 lb ice @ 90°/70°F

I1400 SERIES

I1400A

Self-Contained Air-Cooled Model

Characteristics vary depending on operating conditions.

CYCLE TIMES

Freeze Time + Harvest Time = Total Cycle Time

Air Temp. Entering Condenser °F/°C	Freeze Time			Harvest Time [1]
	Water Temperature °F/°C			
	50/10	70/21	90/32	
70/21	8.3-9.5	9.1-10.4	10.2-11.6	0.75-2.0
80/27	9.1-10.4	9.9-11.3	11.2-12.8	
90/32	9.6-11.0	11.3-12.8	12.0-13.7	
100/38	10.7-12.2	12.6-14.3	13.6-15.4	
110/43	12.0-13.6	14.3-16.2	14.5-16.5	

1 Times in minutes

24 HOUR ICE PRODUCTION

Air Temp. Entering Condenser °F/°C	Water Temperature °F/°C [1,2]		
	50/10	70/21	90/32
70/21	1500	1395	1260
80/27	1395	1295	1160
90/32	1325	1155	1090
100/38	1205	1050	980
110/43	1095	935	920

1 Based on average ice slab weight of 10.25 - 11.50 lb.
2 230/50/1 is approximately 12% lower than 230/60/1

OPERATING PRESSURES

Air Temp Entering Condenser °F/°C	Freeze Cycle		Harvest Cycle	
	Discharge Pressure PSIG	Suction Pressure PSIG	Discharge Pressure PSIG	Suction Pressure PSIG [1]
50/10	220-280	40-24	150-180	70-90
70/21	220-280	40-26	160-180	70-90
80/27	240-290	50-27	160-180	70-90
90/32	260-330	50-27	180-200	80-100
100/38	300-370	54-28	200-220	90-115
110/43	330-410	60-29	220-250	100-130

1 Suction pressure drops gradually throughout the freeze cycle

I1400W

Self-Contained Water-Cooled Model

Characteristics vary depending on operating conditions.

CYCLE TIMES

Freeze Time + Harvest Time = Total Cycle Time

Air Temp. Around Ice Machine °F/°C	Freeze Time			Harvest Time [1]
	Water Temperature °F/°C			
	50/10	70/21	90/32	
70/21	8.2-9.4	9.9-11.3	10.5-12.0	0.75-2.0
80/27	8.3-9.5	10.0-11.4	10.6-12.1	
90/32	8.4-9.6	10.1-11.5	10.7-12.2	
100/38	8.4-9.7	10.2-11.6	10.7-12.2	
110/43	8.6-9.7	10.3-11.7	10.8-12.3	

1 Times in minutes

24 HOUR ICE PRODUCTION

Air Temp. Around Ice Machine °F/°C	Water Temperature °F/°C [1]		
	50/10	70/21	90/32
70/21	1515	1295	1225
80/27	1505	1285	1215
90/32	1495	1275	1210
100/38	1485	1265	1205
110/43	1475	1255	1200

1 Based on average ice slab weight of 10.25 - 11.50 lb.

OPERATING PRESSURES

Air Temp Around Ice Machine °F/°C	Freeze Cycle		Harvest Cycle	
	Discharge Pressure PSIG	Suction Pressure PSIG	Discharge Pressure PSIG	Suction Pressure PSIG [1]
50/10	220-280	40-24	150-180	70-90
70/21	220-280	40-26	160-180	70-90
80/27	240-290	50-27	160-180	70-90
90/32	260-330	50-27	180-200	80-100
100/38	300-370	54-28	200-220	90-115
110/43	330-410	60-29	220-250	100-130

1 Suction pressure drops gradually throughout the freeze cycle
2 Water regulating valve set to maintain 230 psig
3 Condenser Water Usage = 154 gal/100 lb ice @ 90°/70°F

I1400N

Remote Air-Cooled Condenser Model

Characteristics vary depending on operating conditions.

CYCLE TIMES

Freeze Time + Harvest Time = Total Cycle Time

Air Temp. Entering Condenser °F/°C	Freeze Time			Harvest Time [1]
	Water Temperature °F/°C			
	50/10	70/21	90/32	
70/21	8.8-10.1	9.9-11.3	10.9-12.3	0.75-2.0
80/27	9.0-10.2	10.1-11.5	11.0-12.5	
90/32	9.2-10.5	10.6-12.1	11.4-13.0	
100/38	9.9-11.3	11.6-13.2	12.6-14.3	
110/43	11.1-12.6	11.8-13.4	13.7-15.6	

1 Times in minutes

24 HOUR ICE PRODUCTION

Air Temp. Entering Condenser °F/°C	Water Temperature °F/°C [1]		
	50/10	70/21	90/32
70/21	1430	1290	1200
80/27	1410	1270	1180
90/32	1380	1220	1140
100/38	1290	1130	1050
110/43	1175	1110	970

1 Based on average ice slab weight of 10.25- 11.50 lb.

OPERATING PRESSURES

Air Temp Entering Condenser °F/°C	Freeze Cycle		Harvest Cycle	
	Discharge Pressure PSIG	Suction Pressure PSIG	Discharge Pressure PSIG	Suction Pressure PSIG [1]
50/10	210-240	38-24	100-160	70-85
70/21	240-265	40-26	110-170	70-90
80/27	250-275	45-28	110-180	70-95
90/32	250-290	48-29	110-180	70-95
100/38	275-335	51-31	110-185	75-100
110/43	310-375	55-32	120-190	80-110

1 Suction pressure drops gradually throughout the freeze cycle

I1406 SERIES

I1406A

Self-Contained Air-Cooled Model

Characteristics vary depending on operating conditions.

CYCLE TIMES

Freeze Time + Harvest Time = Total Cycle Time

Air Temp. Entering Condenser °F/°C	Freeze Time			Harvest Time [1]
	Water Temperature °F/°C			
	50/10	70/21	90/32	
70/21	11.0-12.6	12.1-14.0	13.2-14.6	0.75-2.0
80/27	12.4-13.3	13.3-14.7	14.3-15.2	
90/32	13.2-14.6	14.0-15.5	15.1-16.9	
100/38	14.0-15.5	15.2-17.1	16.6-19.3	
110/43	15.6-17.3	16.5-20.0	19.3-21.4	

1 Times in minutes

24 HOUR ICE PRODUCTION

Air Temp. Entering Condenser °F/°C	Water Temperature °F/°C [1 2]		
	50/10	70/21	90/32
70/21	1530	1400	1160
80/27	1450	1370	1295
90/32	1305	1235	1000
100/38	1235	1155	890
110/43	1105	950	795

1 Based on average ice slab weight of 10.25 - 11.50 lb.
2 230/50/1 is approximately 12% lower than 230/60/1

OPERATING PRESSURES

Air Temp Entering Condenser °F/°C	Freeze Cycle		Harvest Cycle	
	Discharge Pressure PSIG	Suction Pressure PSIG	Discharge Pressure PSIG	Suction Pressure PSIG [1]
50/10	220-280	40-24	150-180	70-90
70/21	220-280	40-26	160-180	70-90
80/27	240-290	50-27	160-180	70-90
90/32	260-330	50-27	180-200	80-100
100/38	300-370	54-28	200-220	90-115
110/43	330-410	60-29	220-250	100-130

1 Suction pressure drops gradually throughout the freeze cycle

I1406W

Self-Contained Water-Cooled Model

Characteristics vary depending on operating conditions.

CYCLE TIMES

Freeze Time + Harvest Time = Total Cycle Time

Air Temp. Around Ice Machine °F/°C	Freeze Time			Harvest Time [1]
	Water Temperature °F/°C			
	50/10	70/21	90/32	
70/21	11.0-12.9	12.1-14.2	13.3-14.6	0.75-2.0
80/27	11.2-13.2	12.3-14.4	13.3-14.6	
90/32	11.4-13.4	12.7-15.0	13.6-16.0	
100/38	11.6-13.6	12.8-15.0	13.6-16.7	
110/43	11.8-13.9	12.8-15.0		

1 Times in minutes

24 HOUR ICE PRODUCTION

Air Temp. Around Ice Machine °F/°C	Water Temperature °F/°C [1]		
	50/10	70/21	90/32
70/21	1495	1360	1200
80/27	1485	1340	1195
90/32	1390	1325	1195
100/38	1380	1275	1170
110/43	1370	1205	1140

1 Based on average ice slab weight of 10.25 - 11.50 lb.

OPERATING PRESSURES

Air Temp Around Ice Machine °F/°C	Freeze Cycle		Harvest Cycle	
	Discharge Pressure PSIG	Suction Pressure PSIG	Discharge Pressure PSIG	Suction Pressure PSIG [1]
50/10	240-250	40-24	155-185	75-95
70/21	240-250	40-26	165-185	75-95
80/27	240-250	50-27	165-185	75-95
90/32	245-255	50-27	185-205	85-105
100/38	245-260	54-28	205-225	95-120
110/43	245-265	60-29	225-255	105-130

1 Suction pressure drops gradually throughout the freeze cycle
2 Water regulating valve set to maintain 230 psig
3 Condenser Water Usage = 154 gal/100 lb ice @ 90°/70°F

I1406N

Remote Air-Cooled Condenser Model

Characteristics vary depending on operating conditions.

CYCLE TIMES

Freeze Time + Harvest Time = Total Cycle Time

Air Temp. Entering Condenser °F/°C	Freeze Time			Harvest Time [1]
	Water Temperature °F/°C			
	50/10	70/21	90/32	
70/21	12.3-14.1	12.7-14.7	13.7-15.8	0.75-2.0
80/27	12.3-14.2	12.8-14.9	14.0-16.1	
90/32	12.4-14.3	13.9-15.9	14.7-17.0	
100/38	12.8-14.9	14.1-16.3	15.3-17.7	
110/43	13.3-15.4	14.5-16.7	16.0-18.5	

1 Times in minutes

24 HOUR ICE PRODUCTION

Air Temp. Entering Condenser °F/°C	Water Temperature °F/°C [1]		
	50/10	70/21	90/32
70/21	1490	1360	1240
80/27	1435	1325	1235
90/32	1355	1295	1230
100/38	1290	1185	1100
110/43	1160	1275	1000

1 Based on average ice slab weight of 10.25- 11.50 lb.

OPERATING PRESSURES

Air Temp Entering Condenser °F/°C	Freeze Cycle		Harvest Cycle	
	Discharge Pressure PSIG	Suction Pressure PSIG	Discharge Pressure PSIG	Suction Pressure PSIG [1]
50/10	205-220	50-32	100-150	75-100
70/21	225-260	60-32	110-160	75-100
80/27	240-170	60-32	110-160	75-100
90/32	250-270	60-32	120-160	80-100
100/38	300-375	85-35	130-170	80-100
110/43	310-375	90-36	130-170	80-100

1 Suction pressure drops gradually throughout the freeze cycle

I1800 SERIES

I1800A

Self-Contained Air-Cooled Model

Characteristics vary depending on operating conditions.

CYCLE TIMES

Freeze Time + Harvest Time = Total Cycle Time

Air Temp. Entering Condenser °F/°C	Freeze Time			Harvest Time [1]
	Water Temperature °F/°C			
	50/10	70/21	90/32	
70/21	8.8-10.1	9.6-11.0	10.5-11.9	0.75-2.0
80/27	9.6-11.0	10.7-12.2	11.5-13.1	
90/32	10.4-11.8	11.8-13.4	12.6-14.3	
100/38	11.4-13.0	13.1-14.9	14.1-16.0	
110/43	12.8-14.5	14.9-16.9	16.1-18.2	

1 Times in minutes

24 HOUR ICE PRODUCTION

Air Temp. Entering Condenser °F/°C	Water Temperature °F/°C [1 2]		
	50/10	70/21	90/32
70/21	1840	1710	1590
80/27	1710	1560	1460
90/32	1600	1430	1350
100/38	1470	1300	1220
110/43	1330	1160	1080

1 Based on average ice slab weight of 13.20 - 14.80 lb.
2 230/50/1 is approximately 12% lower than 230/60/1

OPERATING PRESSURES

Air Temp Entering Condenser °F/°C	Freeze Cycle		Harvest Cycle	
	Discharge Pressure PSIG	Suction Pressure PSIG	Discharge Pressure PSIG	Suction Pressure PSIG [1]
50/10	220-280	40-24	150-180	70-90
70/21	220-280	40-26	160-180	70-90
80/27	240-290	50-27	160-180	70-90
90/32	260-330	50-27	180-200	80-100
100/38	300-270	54-28	200-220	90-115
110/43	330-410	60-30	220-250	100-130

1 Suction pressure drops gradually throughout the freeze cycle

I1800W

Self-Contained Water-Cooled Model

Characteristics vary depending on operating conditions.

CYCLE TIMES

Freeze Time + Harvest Time = Total Cycle Time

Air Temp. Around Ice Machine °F/°C	Freeze Time			Harvest Time [1]
	Water Temperature °F/°C			
	50/10	70/21	90/32	
70/21	8.8-10.0	9.8-11.2	11.0-12.5	0.75-2.0
80/27	8.9-10.2	10.0-11.3	11.1-12.6	
90/32	9.0-10.3	10.1-11.5	11.2-12.7	
100/38	9.1-10.4	10.3-11.7	11.3-12.8	
110/43	9.2-10.5	10.5-11.9	11.3-12.9	

1 Times in minutes

24 HOUR ICE PRODUCTION

Air Temp. Around Ice Machine °F/°C	Water Temperature °F/°C [1]		
	50/10	70/21	90/32
70/21	1850	1680	1520
80/27	1820	1660	1510
90/32	1810	1640	1500
100/38	1780	1610	1490
110/43	1790	1590	1480

1 Based on average ice slab weight of 13.20 - 14.80 lb.

OPERATING PRESSURES

Air Temp Around Ice Machine °F/°C	Freeze Cycle		Harvest Cycle	
	Discharge Pressure PSIG	Suction Pressure PSIG	Discharge Pressure PSIG	Suction Pressure PSIG [1]
50/10	230-240	45-25	145-165	65-80
70/21	220-280	40-26	160-180	70-90
80/27	230-240	45-25	145-165	65-80
90/32	240-270	50-25	150-190	70-90
100/38	240-280	55-25	155-190	70-90
110/43	240-280	55-25	155-190	70-90

1 Suction pressure drops gradually throughout the freeze cycle
2 Water regulating valve set to maintain 230 psig
3 Condenser Water Usage = 181 gal/100 lb ice @ 90°/70°F

I1800N

Remote Air-Cooled Condenser Model

Characteristics vary depending on operating conditions.

CYCLE TIMES

Freeze Time + Harvest Time = Total Cycle Time

Air Temp. Entering Condenser °F/°C	Freeze Time			Harvest Time [1]
	Water Temperature °F/°C			
	50/10	70/21	90/32	
70/21	9.2-10.5	10.1-11.5	10.0-12.4	0.75-2.0
80/27	9.6-11.0	10.6-12.1	11.5-13.0	
90/32	10.2-11.6	11.2-12.8	12.2-13.9	
100/38	11.0-12.5	12.1-13.8	13.3-15.1	
110/43	11.9-13.6	13.2-15.0	14.7-16.6	

1 Times in minutes

24 HOUR ICE PRODUCTION

Air Temp. Entering Condenser °F/°C	Water Temperature °F/°C [1]		
	50/10	70/21	90/32
70/21	1775	1635	1535
80/27	1705	1565	1465
90/32	1625	1495	1385
100/38	1525	1395	1285
110/43	1415	1295	1175

1 Based on average ice slab weight of 13.20- 14.80 lb.

OPERATING PRESSURES

Air Temp Entering Condenser °F/°C	Freeze Cycle		Harvest Cycle	
	Discharge Pressure PSIG	Suction Pressure PSIG	Discharge Pressure PSIG	Suction Pressure PSIG [1]
50/10	230-265	38-24	100-160	70-85
70/21	240-265	40-26	110-170	70-90
80/27	250-275	45-28	110-180	70-95
90/32	250-300	52-29	110-180	70-95
100/38	275-335	55-31	110-185	75-100
110/43	310-385	55-32	120-190	80-110

1 Suction pressure drops gradually throughout the freeze cycle

THIS PAGE INTENTIONALLY LEFT BLANK

Diagrams

Wiring Diagrams

The following pages contain electrical wiring diagrams. Be sure you are referring to the correct diagram for the ice machine you are servicing.

⚠ Warning

Always disconnect power before working on electrical circuitry.

Some components are wired differently on energy efficient machines. Please verify your model number (page 17) to reference the correct diagrams.

WIRING DIAGRAM LEGEND

The following symbols are used on all of the wiring diagrams:

*	Internal Compressor Overload (Some models have external compressor overloads)
**	Fan Motor Run Capacitor (Some models do not incorporate fan motor run capacitor)
( )	Wire Number Designation (The number is marked at each end of the wire)
—>>—	Multi-Pin Connection (Electrical Box Side) —>>— (Compressor Compartment Side)

I0300/I0450/I0500/I0520 - 1PH AIR/WATER

Self Contained Air & Water-cooled

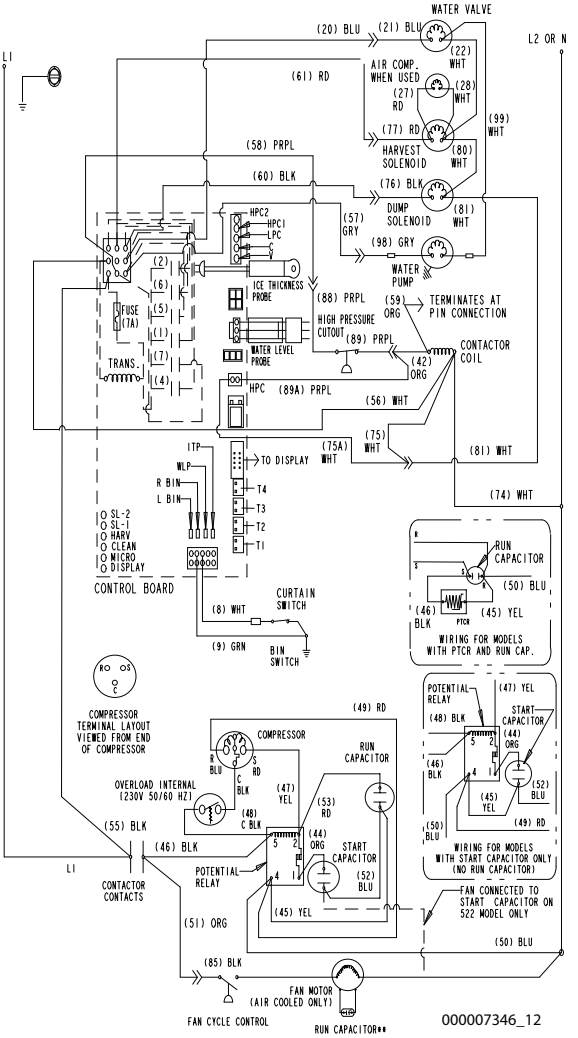

I0320 - 1PH AIR/WATER

Self Contained Air & Water-cooled

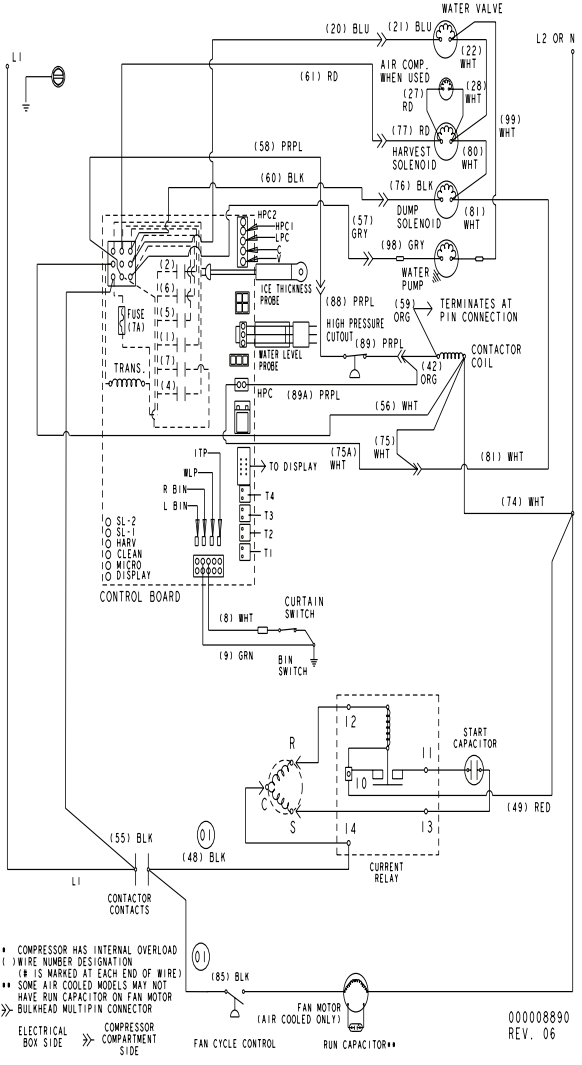

I0500 - 1PH REMOTE

Remote Air-cooled

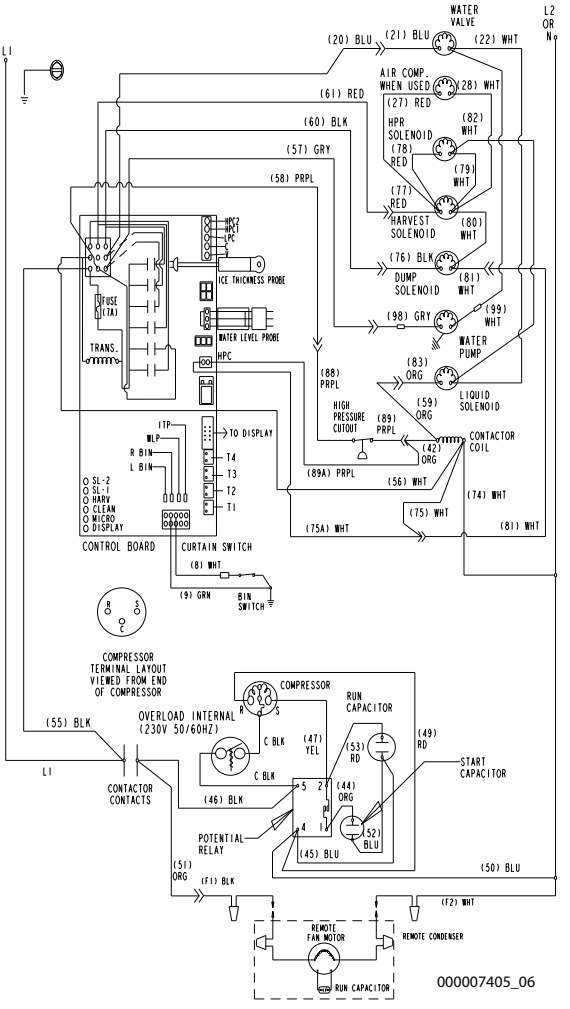

I0600/I0606/I0850/I0906/I1000/I1106/I1200 - 1PH AIR/WATER

Self Contained Air & Water-cooled

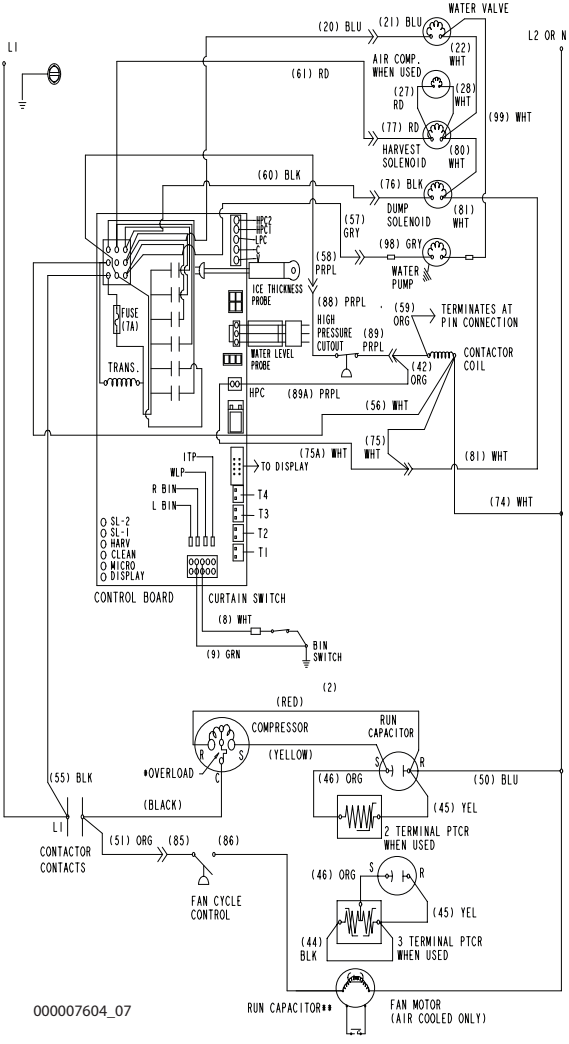

I0600/I0606/I0850/I0906/I1000/I1106/I1200 - 3PH AIR/WATER

Self Contained Air & Water-cooled

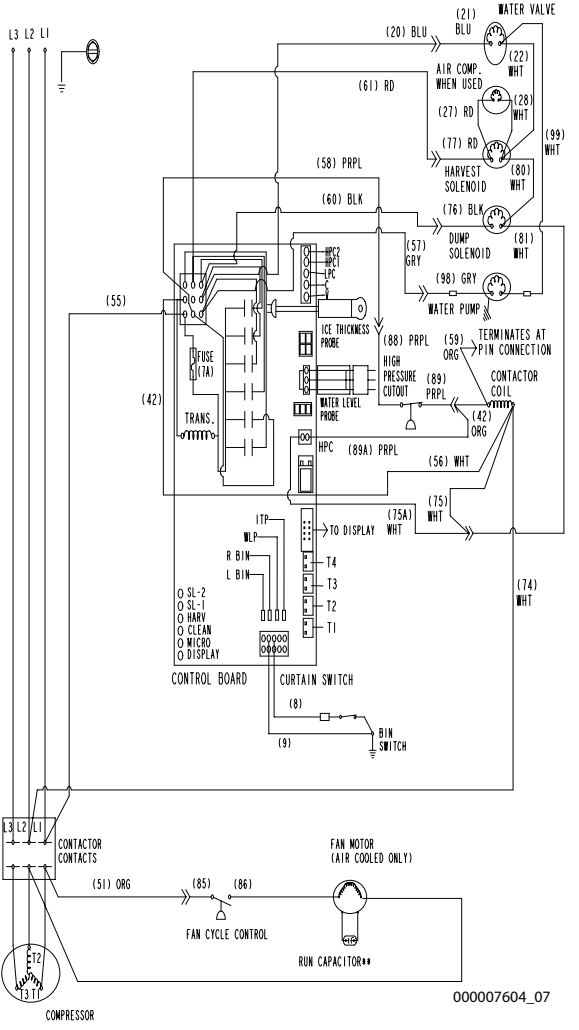

I0600/I0606/I0850/I0906/I1000/I1106 - 1PH REMOTE

Remote Condenser Air-cooled

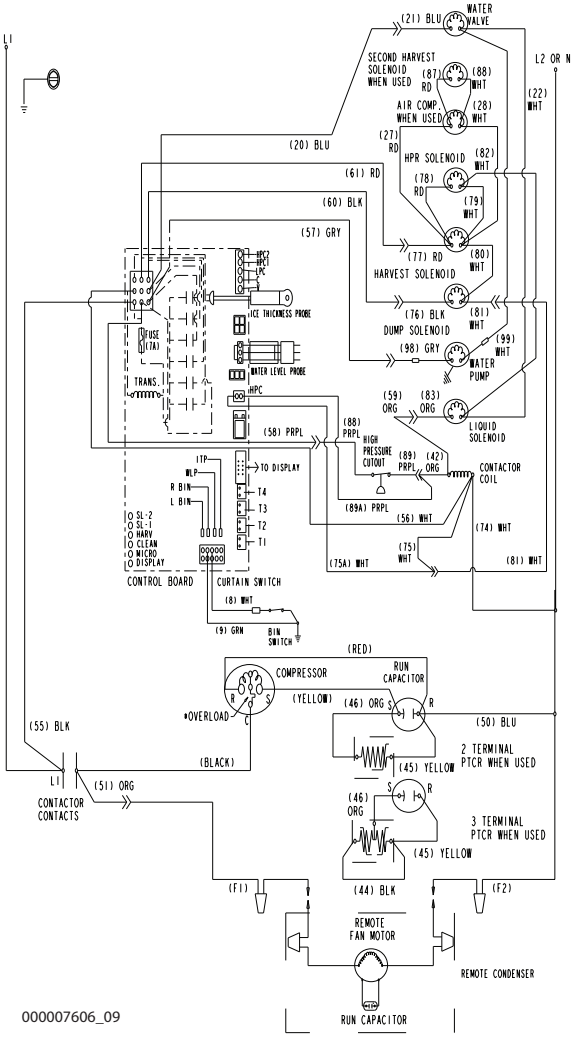

I0600/I0606/I0850/I0906/I1000/I1106 - 3PH REMOTE

Remote Condenser Air-cooled

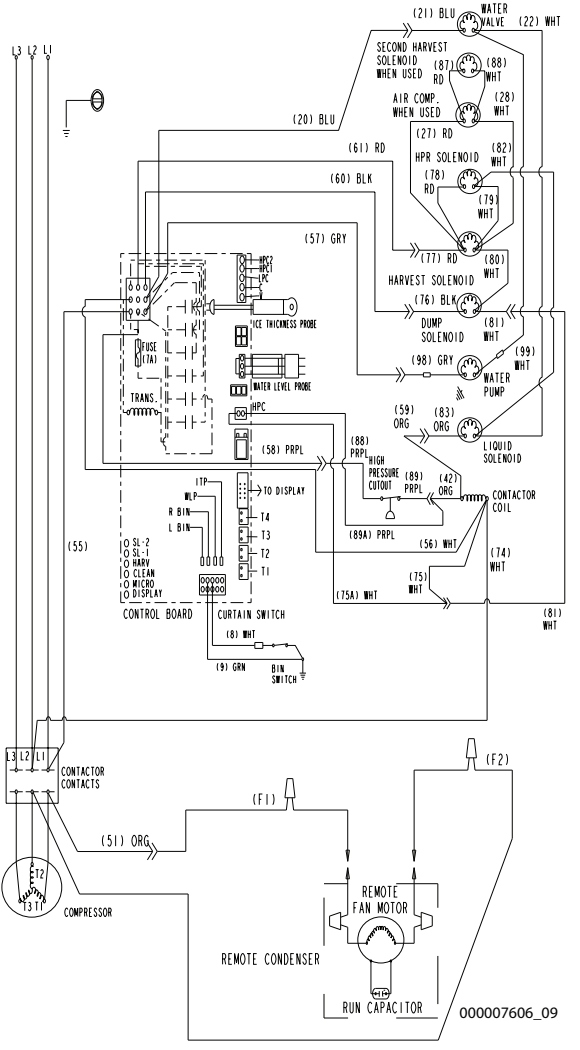

I1400/I1406/I1800 - 1PH AIR/WATER

Self Contained Air & Water-cooled

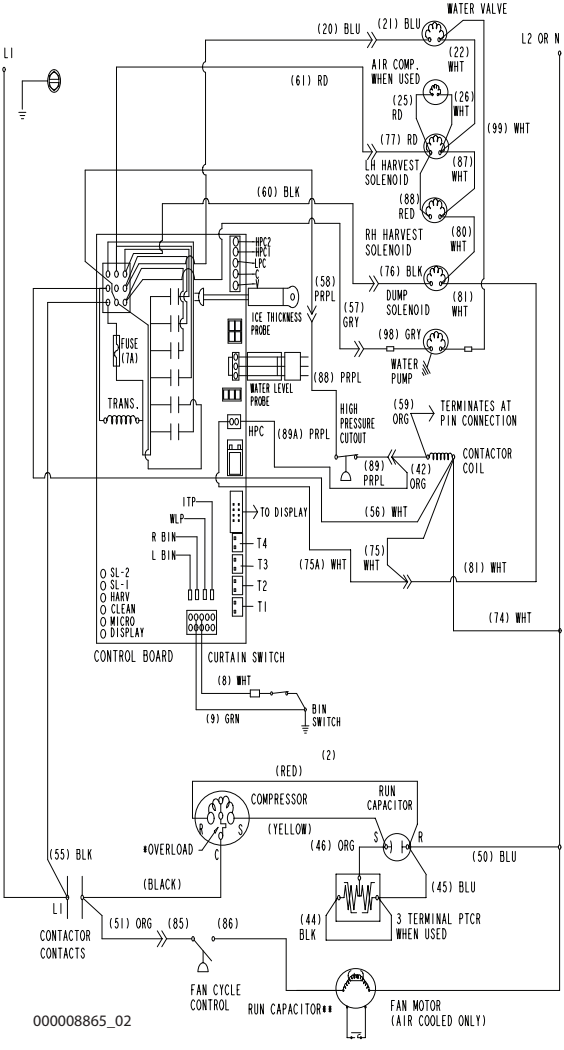

I1400/I1406/I1800 - 3PH AIR/WATER

Self Contained Air & Water-cooled

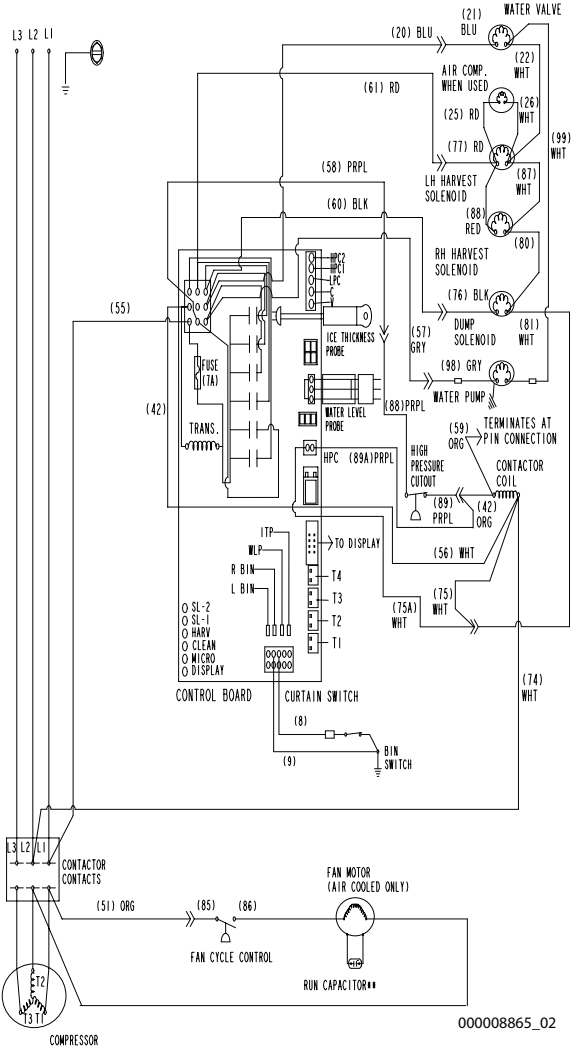

I1400/I1406/I1800 1PH REMOTE

Remote Condenser

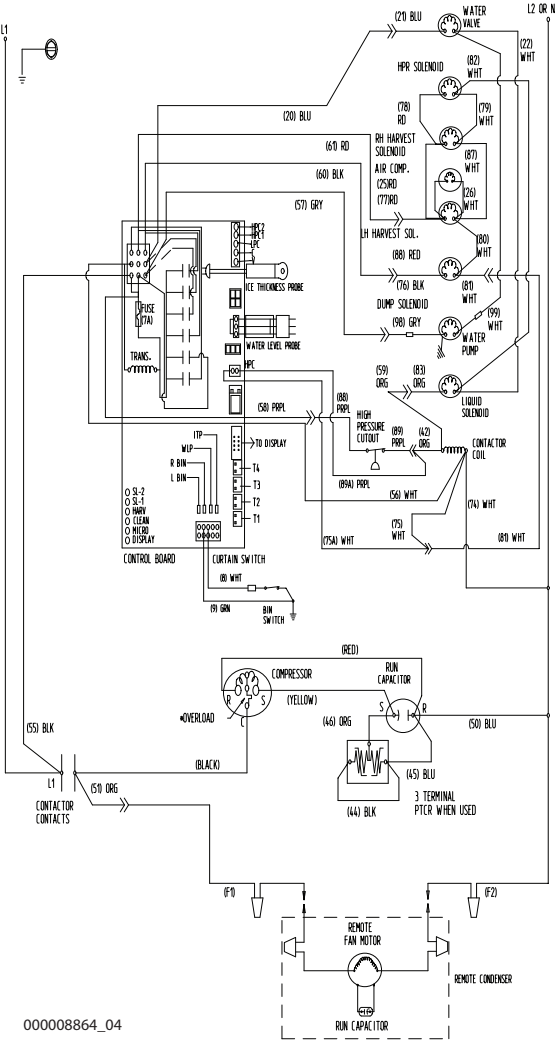

I1400/I1406/I1800 - 3PH REMOTE

Remote Condenser

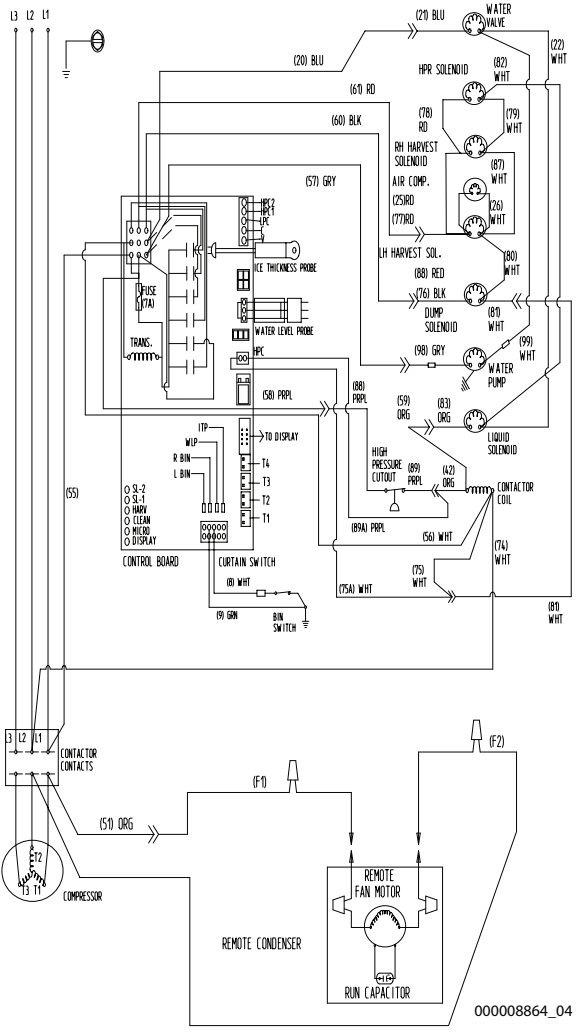

I1400 ECM FAN MOTOR - 1PH AIR

Self Contained Air-cooled

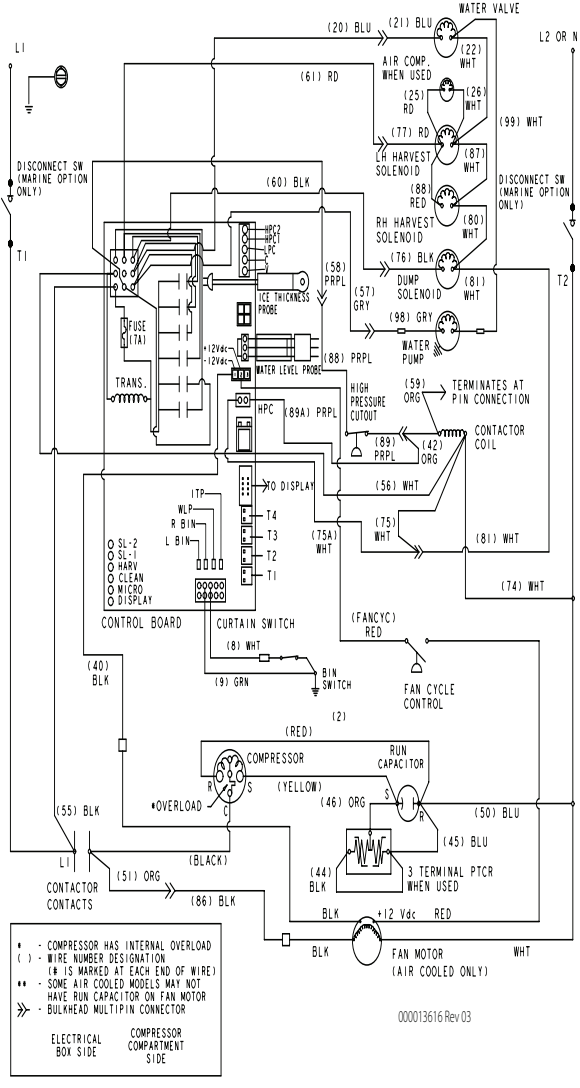

I1400 ECM FAN MOTOR - 3PH AIR

Self Contained Air-cooled

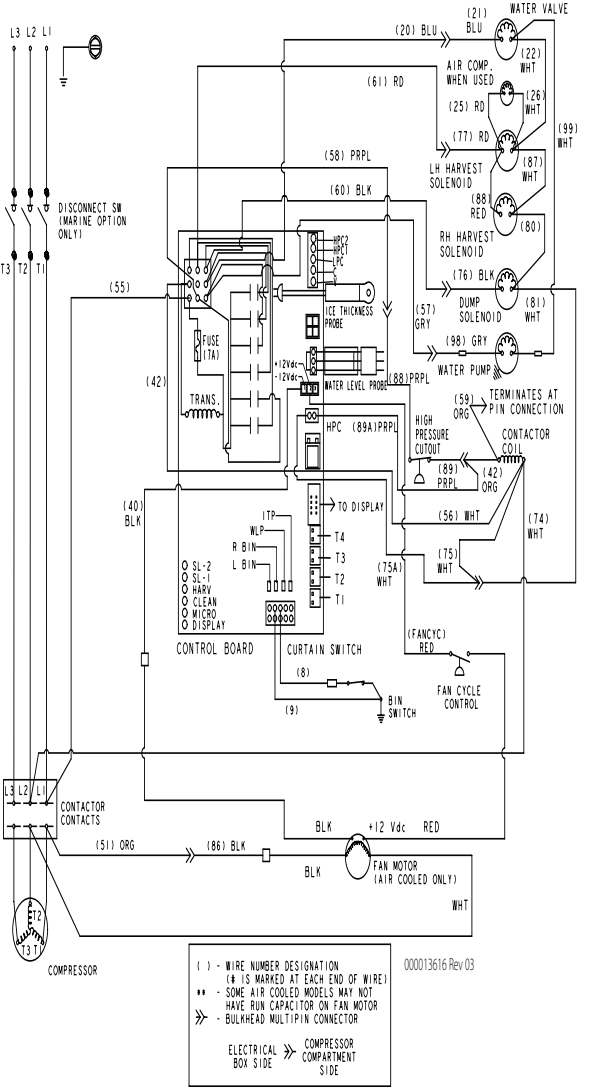

ELECTRICAL NOISE FILTER

Filter is installed to the incoming line voltage power supply on Korean models.

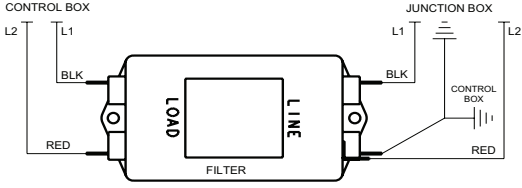

Electronic Control Board

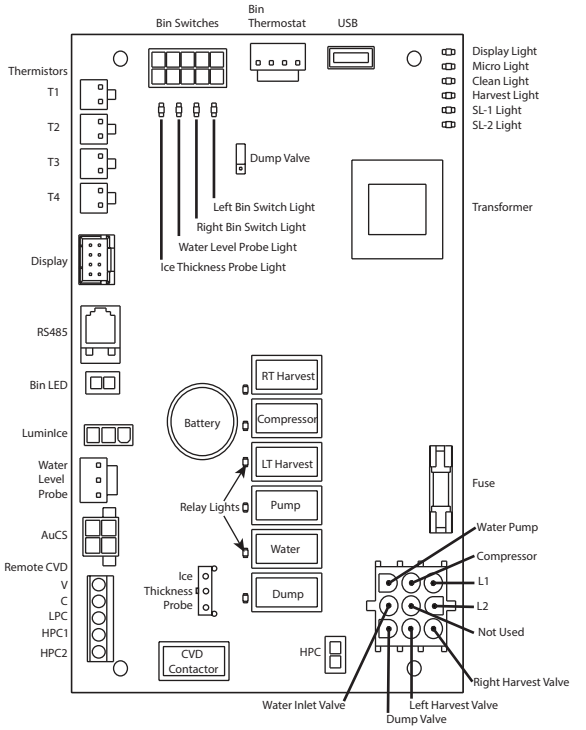

Refrigeration Tubing Schematics

SELF-CONTAINED AIR OR WATER-COOLED

I0300/I0320/I0520/I0450/I0500/I0600/I0606/I0850/I0906/I1000/I1200

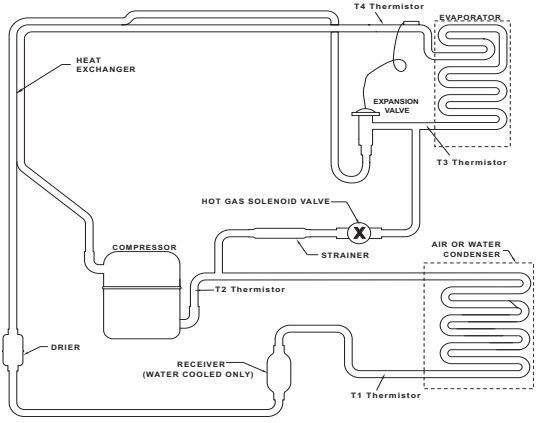

I1106

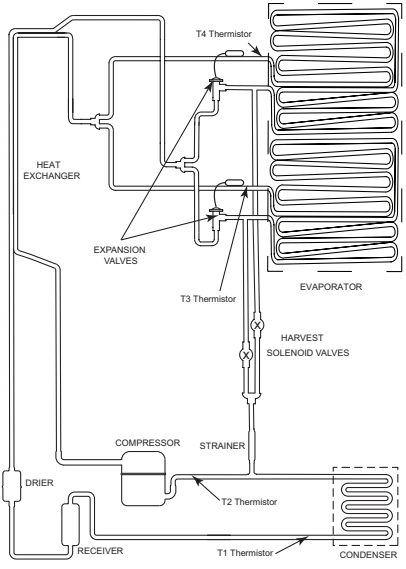

I1400/I1406/I1800

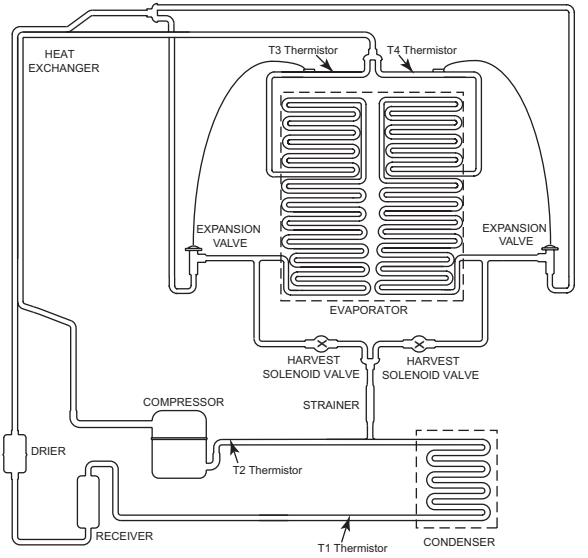

REMOTE CONDENSER MODELS

I0500/I0600/I0606/I0850/I1000

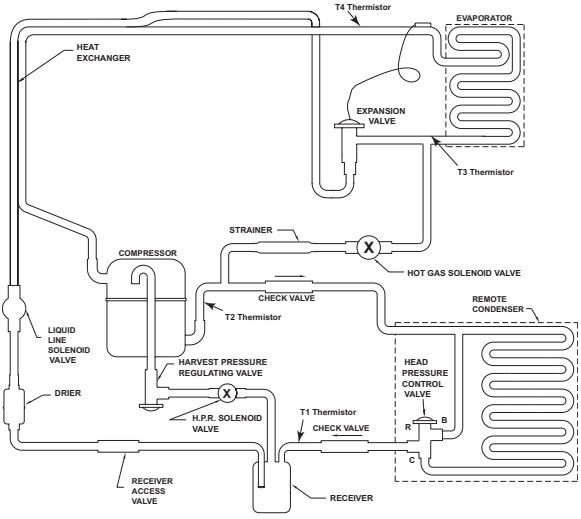

I1106

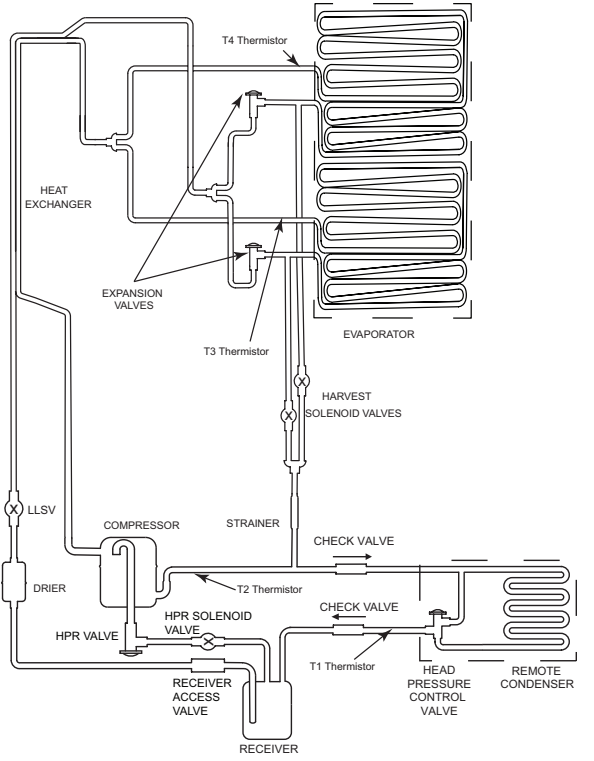
T4 Thermistor
HEAT
EXCHANGER
EXPANSION
VALVES
EVAPORATOR
T3 Thermistor
HARVEST
SOLENOID VALVES
LLSV
COMPRESSOR
STRAINER
CHECK VALVE
DRIER
T2 Thermistor
CHECK VALVE
HPR SOLENOID
VALVE
HPR VALVE
T1 Thermistor
HEAD
PRESSURE
CONTROL
VALVE
REMOTE
CONDENSER
RECEIVER
ACCESS
VALVE
RECEIVER

I1400/I1406/I1800

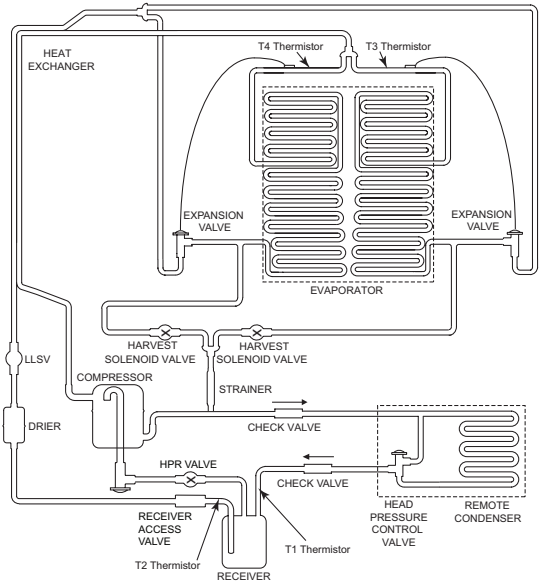

THIS PAGE INTENTIONALLY LEFT BLANK

THIS PAGE INTENTIONALLY LEFT BLANK

THIS PAGE INTENTIONALLY LEFT BLANK

MANITOWOC ICE
2110 SOUTH 26TH STREET
MANITOWOC, WI 54220

800-545-5720
WWW.MANITOWOCICE.COM

©2018 Manitowoc Ice except where explicitly stated. All rights reserved.

Continuing product improvement may necessitate change of specifications without notice.

Part Number 000014794 5/17