Hoshizaki America, Inc.

Modular Crescent Cuber

Models
KM-650MAH
KM-650MWH
KM-650MRH

"A Superior Degree of Reliability"

www.hoshizaki.com

SERVICE MANUAL

Number: 73147
Issued: 12-12-2006

IMPORTANT

Only qualified service technicians should attempt to service or maintain this unit. No such service or maintenance should be undertaken until the technician has thoroughly read this Service Manual.

HOSHIZAKI provides this manual primarily to assist qualified service technicians in the service and maintenance of the unit.

Should the reader have any questions or concerns which have not been satisfactorily addressed, please call, write or send an e-mail message to the HOSHIZAKI Technical Support Department for assistance.

HOSHIZAKI AMERICA, INC.
618 Highway 74 South
Peachtree City, GA 30269

Attn: HOSHIZAKI Technical Support Department

Phone: 1-800-233-1940 Technical Service
(770) 487-2331
Fax: 1-800-843-1056
(770) 487-3360
E-mail: techsupport@hoshizaki.com

Web Site: www.hoshizaki.com

NOTE: To expedite assistance, all correspondence/communication MUST include the following information:

- Model Number
- Serial Number
- Complete and detailed explanation of the problem

Please review this manual. It should be read carefully before the icemaker is serviced or maintenance operations are performed. Only qualified service technicians should service and maintain the icemaker. This manual should be made available to the technician prior to service or maintenance.

CONTENTS

I. Specifications 5
A. Icemaker 5
1. KM-650MAH (air-cooled) 5
2. KM-650MWH (water-cooled) 6
3. KM-650MRH (remote air-cooled) 7
B. Condensing Unit 8
1. URC-5F 8
II. General Information 10
A. Construction 10
1. KM-650MAH (air-cooled) 10
2. KM-650MWH (water-cooled) 11
3. KM-650MRH (remote air-cooled) 12
B. Sequence of Operation 13
1. One Minute Fill Cycle 13
2. Initial Harvest Cycle 13
3. Freeze Cycle 13
4. Pump-Out Cycle 13
5. Normal Harvest Cycle 13
C. Control Board 15
1. Control Board Layout 16
2. Features 17
a) Maximum Water Supply Period – 6 minutes 17
b) Harvest Backup Timer and Freeze Timer 17
c) High Temperature Safety 17
d) Low Water Safety 17
e) High Voltage and Low Voltage Cut-outs 17
f) LED Lights and Audible Alarm Safeties 18
3. Controls and Adjustments 19
a) Default Dip Switch Settings 19
b) Harvest Control – Thermistor 19
c) Harvest Timer (dip switch 1 & 2) 20
d) Pump-Out Timer (dip switch 3 & 4) 20
e) Pump-Out Frequency Control (dip switch 5 & 6) 21
f) Freeze Timer (dip switch 9 & 10) 21
g) Bin Control 21
4. Control Board Check Procedure 22
5. Control Board Replacement 22

III. Technical Information 23
A. Water Circuit and Refrigeration Circuit 23
1. KM-650MAH (air-cooled) 23
2. KM-650MWH (water-cooled) 24
3. KM-650MRH (remote air-cooled) 25
B. Wiring Diagrams 26
1. KM-650MAH (air-cooled) and KM-650MWH (water-cooled) 26
2. KM-650MRH (remote air-cooled) 27
C. Performance Data 28
1. KM-650MAH (air-cooled) 28
2. KM-650MWH (water-cooled) 29
3. KM-650MRH (remote air-cooled) 30
IV. Service Diagnosis 31
A. 10-Minute KM Diagnostic Procedure 31
B. Diagnostic Charts 32
1. No Ice Production 32
2. Evaporator is Frozen Up 36
3. Low Ice Production 37
4. Abnormal Ice 37
5. Other 37
V. Removal and Replacement of Components 39
A. Service for Refrigerant Lines 39
1. Refrigerant Recovery 39
2. Evacuation and Recharge (R-404A) 39
B. Brazing 40
C. Removal and Replacement of Compressor 40
D. Removal and Replacement of Drier 41
E. Removal and Replacement of Expansion Valve 42
F. Removal and Replacement of Hot Gas Valve and Line Valve 43
G. Removal and Replacement of Evaporator 44
H. Removal and Replacement of Water Regulating Valve - Water Cooled Model Only 44
I. Adjustment of Water Regulating Valve - Water-Cooled Model Only 45
J. Removal and Replacement of Headmaster (Condensing Pressure Regulator - C.P.R.) - Remote Air-Cooled Model Only 46
K. Removal and Replacement of Thermistor 47
L. Removal and Replacement of Fan Motor 47
M. Removal and Replacement of Inlet Water Valve 48
N. Removal and Replacement of Pump Motor 48
O. Removal and Replacement of Spray Tubes 49
VI. Cleaning and Maintenance Instructions 50
A. Cleaning and Sanitizing Procedures 50
1. Cleaning Procedure 51
2. Sanitizing Procedure - Following Cleaning Procedure 52
B. Maintenance 52
C. Preparing the Icemaker for Long Storage 53

I. Specifications

A. Icemaker

1. KM-650MAH (air-cooled)

AC SUPPLY VOLTAGE	208-230/60/1 (3 wire with neutral for 115V)
AMPERAGE	6.6 A (5 Min. Freeze AT 104°F / WT 80°F)
MINIMUM CIRCUIT AMPACITY	15 A
MAXIMUM FUSE SIZE	15 A

APPROXIMATE ICE PRODUCTION PER 24 HR.
lbs./day (kg/day)
Reference without *marks

Ambient Temp.(°F)	WATER TEMP. (°F) 50	70	90
70	*589 (267)	566 (257)	526 (238)
80	572 (259)	537 (243)	490 (222)
90	566 (257)	*512 (232)	467 (212)
100	555 (252)	501 (227)	426 (193)

SHAPE OF ICE	Crescent Cube
ICE PRODUCTION PER CYCLE	13.5 lbs. (6.1 kg) 720 pcs.
APPROXIMATE STORAGE CAPACITY	N/A

ELECTRIC & WATER CONSUMPTION	90/70°F	70/50°F
ELECTRIC W (kWH/100 lbs.)	1240(5.8)	1100(4.5)
WATER gal./24HR (gal./100 lbs.)	108(21.1)	257(43.7)

EXTERIOR DIMENSIONS (WxDxH)	22" x 27-3/8" x 37-7/16" (560 x 695 x 950 mm)	
EXTERIOR FINISH	Stainless Steel, Galvanized Steel (Rear)	
WEIGHT	Net 169 lbs. (77 kg), Shipping 200 lbs. (91 kg)	
CONNECTIONS - ELECTRIC	Permanent - Connection	
- WATER SUPPLY	Inlet	1/2" FPT
- DRAIN	Outlet	3/4" FPT
		3/8" OD Tube

CUBE CONTROL SYSTEM	Float Switch
HARVESTING CONTROL SYSTEM	Hot Gas and Water, Thermistor and Timer
ICE MAKING WATER CONTROL	Timer Controlled. Overflow Pipe
COOLING WATER CONTROL	N/A
BIN CONTROL SYSTEM	Thermostat
COMPRESSOR	Hermetic, Model RS55C2E-CAV
CONDENSER	Air-Cooled , Fin and tube type
EVAPORATOR	Vertical type, Stainless Steel and Copper
REFRIGERANT CONTROL	Thermostatic Expansion Valve
REFRIGERANT CHARGE	R-404A, 1 lb. 8.7 oz. (700g)
DESIGN PRESSURE	High 467PSIG, Low 230PSIG
P.C. BOARD CIRCUIT PROTECTION	High Voltage Cut-out (Internal)
COMPRESSOR PROTECTION	Auto-reset Overload Protector (Internal)
REFRIGERANT CIRCUIT PROTECTION	Auto-reset High Pressure Control Switch
LOW WATER PROTECTION	Float Switch
ACCESSORIES -SUPPLIED	N/A
-REQUIRED	Ice Storage Bin

OPERATING CONDITIONS	VOLTAGE RANGE	187 - 253 V
	AMBIENT TEMP.	45 -100° F
	WATER SUPPLY TEMP.	45 - 90° F
	WATER SUPPLY PRESSURE	10 - 113 PSIG

Note: We reserve the right to make changes in specifications and design without prior notice.

2. KM-650MWH (water-cooled)

AC SUPPLY VOLTAGE	208-230/60/1 (3 wire with neutral for 115V)
AMPERAGE	5.3 A (5 Min. Freeze AT 104°F / WT 80°F)
MINIMUM CIRCUIT AMPACITY	15 A
MAXIMUM FUSE SIZE	15 A

APPROXIMATE ICE PRODUCTION PER 24 HR.
lbs./day (kg/day)
Reference without *marks

Ambient Temp.(°F)	WATER TEMP. (°F) 50	70	90
70	*680 (308)	675 (306)	626 (284)
80	676 (307)	668 (303)	595 (270)
90	675 (306)	*662 (300)	598 (271)
100	651 (295)	647 (294)	540 (245)

SHAPE OF ICE	Crescent Cube	
ICE PRODUCTION PER CYCLE	14.8 lbs. (6.7 kg) 720 pcs.	
APPROXIMATE STORAGE CAPACITY	N/A	
ELECTRIC & WATER CONSUMPTION	90/70°F	70/50°F
ELECTRIC W (kWH/100 lbs.)	1050(3.8)	1020(3.6)
WATER gal./24HR (gal./100 lbs.)	149(22.5)	254(37.4)
WATER COOLED CONDENSER gal./24HR (gal./100 lbs.)	741(112)	408(60)

EXTERIOR DIMENSIONS (WxDxH)	22" x 27-3/8" x 37-7/16" (560 x 695 x 950 mm)			
EXTERIOR FINISH	Stainless Steel, Galvanized Steel (Rear)			
WEIGHT	Net 169 lbs. (77 kg), Shipping 200 lbs. (91 kg)			
CONNECTIONS - ELECTRIC	Permanent - Connection			
- WATER SUPPLY	Inlet	1/2" FPT	Condenser Inlet	1/2" FPT
- DRAIN	Outlet	3/4" FPT	Condenser Outlet	3/8" FPT
		3/8" OD Tube		

CUBE CONTROL SYSTEM	Float Switch
HARVESTING CONTROL SYSTEM	Hot Gas and Water, Thermistor and Timer
ICE MAKING WATER CONTROL	Timer Controlled. Overflow Pipe
COOLING WATER CONTROL	Pressure Regulator
BIN CONTROL SYSTEM	Thermostat
COMPRESSOR	Hermetic, Model RS55C2E-CAV
CONDENSER	Water-cooled, Tube in tube type
EVAPORATOR	Vertical type, Stainless Steel and Copper
REFRIGERANT CONTROL	Thermostatic Expansion Valve
REFRIGERANT CHARGE	R-404A, 1 lb. 5.7 oz. (615g)
DESIGN PRESSURE	High 427PSIG, Low 230PSIG
P.C. BOARD CIRCUIT PROTECTION	High Voltage Cut-out (Internal)
COMPRESSOR PROTECTION	Auto-reset Overload Protector (Internal)
REFRIGERANT CIRCUIT PROTECTION	Auto-reset High Pressure Control Switch
LOW WATER PROTECTION	Float Switch
ACCESSORIES -SUPPLIED	N/A
-REQUIRED	Ice Storage Bin
OPERATING CONDITIONS	VOLTAGE RANGE 187 - 253 V
	AMBIENT TEMP. 45 -100° F
	WATER SUPPLY TEMP. 45 - 90° F
	WATER SUPPLY PRESSURE 10 - 113 PSIG

Note: We reserve the right to make changes in specifications and design without prior notice.

3. KM-650MRH (remote air-cooled)

AC SUPPLY VOLTAGE	208-230/60/1 (3 wire with neutral for 115V)
AMPERAGE	7.1 A (5 Min. Freeze AT 104°F / WT 80°F)
MINIMUM CIRCUIT AMPACITY	15 A
MAXIMUM FUSE SIZE	15 A

APPROXIMATE ICE PRODUCTION PER 24 HR.
lbs./day (kg/day)
Reference without *marks

Ambient Temp.(°F)	WATER TEMP. (°F) 50	70	90
70	*615 (279)	597 (271)	556 (252)
80	601 (273)	574 (260)	523 (237)
90	597 (271)	*554 (251)	506 (230)
100	583 (264)	543 (246)	462 (210)

SHAPE OF ICE	Crescent Cube	
ICE PRODUCTION PER CYCLE	14.1 lbs. (6.4 kg) 720 pcs.	
APPROXIMATE STORAGE CAPACITY	N/A	
ELECTRIC & WATER CONSUMPTION	90/70°F	70/50°F
ELECTRIC W (kWH/100 lbs.)	1250(5.4)	1150(4.5)
WATER gal./24HR (gal./100 lbs.)	111(20.0)	266(43.2)
EXTERIOR DIMENSIONS (WxDxH)	22" x 27-3/8" x 37-7/16" (560 x 695 x 950 mm)	
EXTERIOR FINISH	Stainless Steel, Galvanized Steel (Rear)	
WEIGHT	Net 169 lbs. (77 kg), Shipping 200 lbs. (91 kg)	
CONNECTIONS - ELECTRIC	Permanent - Connection	
- WATER SUPPLY	Inlet	1/2" FPT
- DRAIN	Outlet	3/4" FPT
		3/8" OD Tube
CUBE CONTROL SYSTEM	Float Switch	
HARVESTING CONTROL SYSTEM	Hot Gas and Water, Thermistor and Timer	
ICE MAKING WATER CONTROL	Timer Controlled. Overflow Pipe	
COOLING WATER CONTROL	N/A	
BIN CONTROL SYSTEM	Thermostat	
COMPRESSOR	Hermetic, Model RS55C2E-CAV	
CONDENSER	Air-cooled Remote, Condenser Unit URC-5F	
EVAPORATOR	Vertical type, Stainless Steel and Copper	
REFRIGERANT CONTROL	Thermostatic Expansion Valve	
	Condensing Pressure Regulator on URC-5F	
REFRIGERANT CHARGE	R-404A, 5 lbs. 11 oz. (2580 g)	
	(Icemaker 3 lbs. 13 oz. Cond. Unit 1 lb. 14 oz.)	
DESIGN PRESSURE	High 467 PSIG, Low 230 PSIG	
P.C. BOARD CIRCUIT PROTECTION	High Voltage Cut-out (Internal)	
COMPRESSOR PROTECTION	Auto-reset Overload Protector (Internal)	
REFRIGERANT CIRCUIT PROTECTION	Auto-reset High Pressure Control Switch	
LOW WATER PROTECTION	Float Switch	
ACCESSORIES -SUPPLIED	N/A	
-REQUIRED	Ice Storage Bin, Remote Condenser Unit	
OPERATING CONDITIONS	VOLTAGE RANGE	187 - 253 V
	AMBIENT TEMP.	45 -100° F
	WATER SUPPLY TEMP.	45 - 90° F
	WATER SUPPLY PRESSURE	10 - 113 PSIG

Note: We reserve the right to make changes in specifications and design without prior notice.

B. Condensing Unit

1. URC-5F

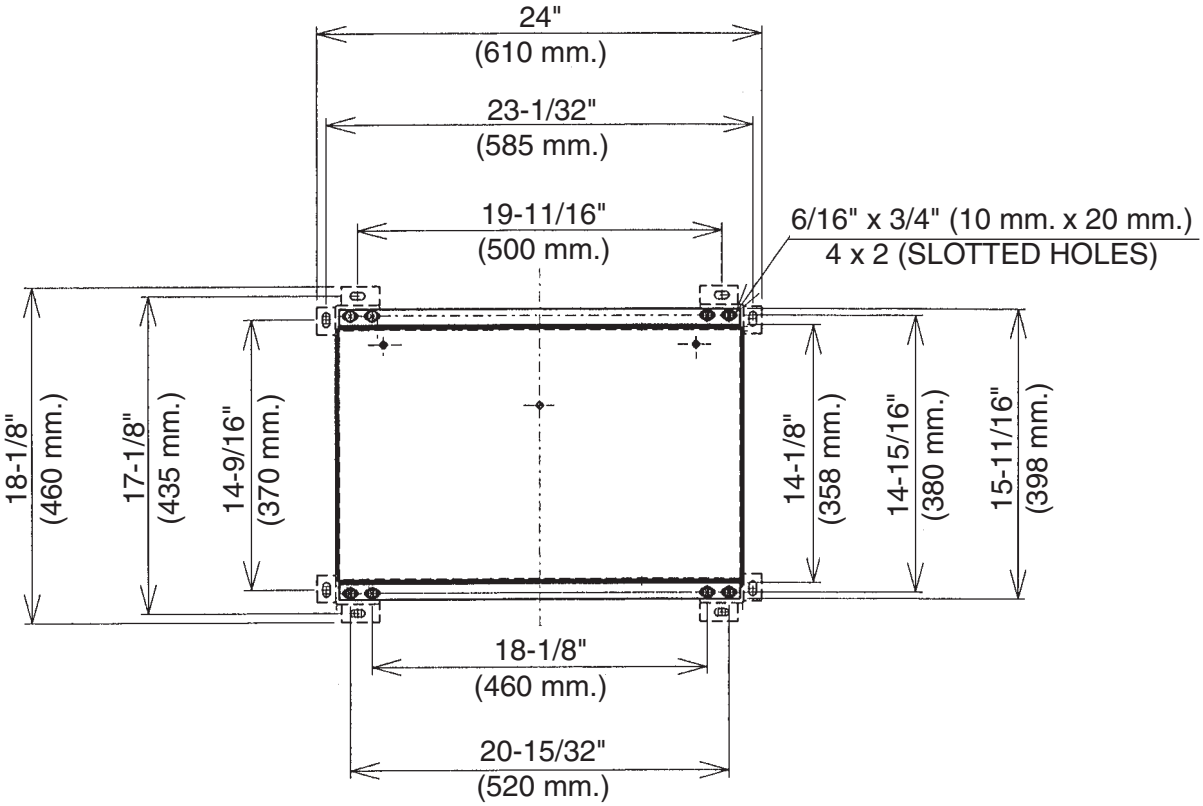

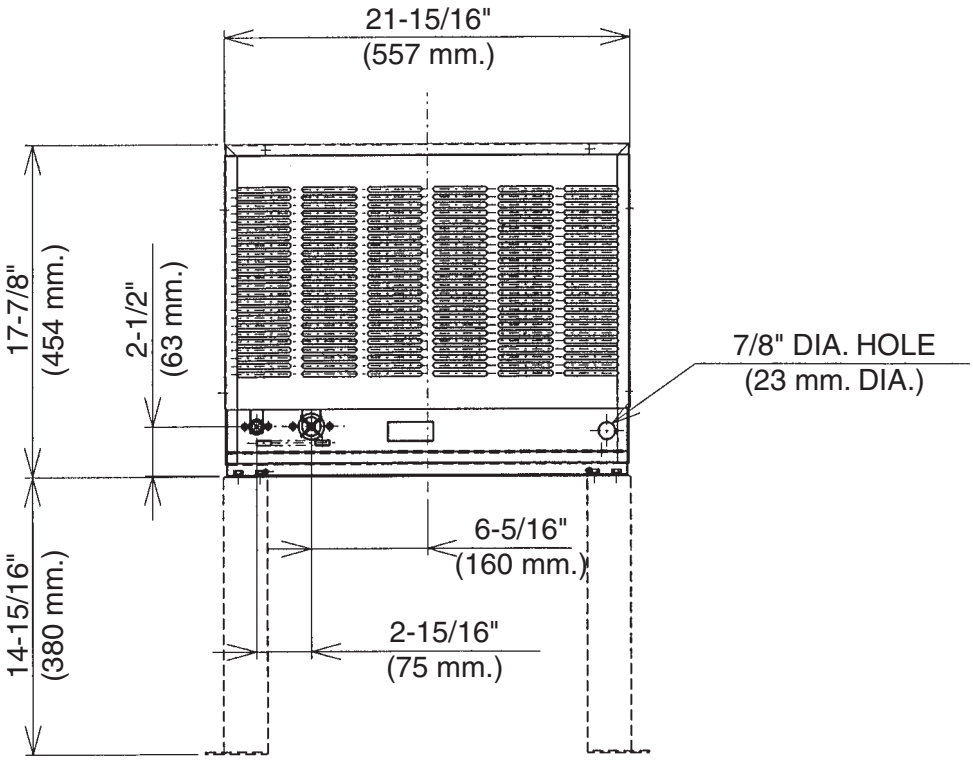

Specifications

MODEL: URC-5F

AC SUPPLY VOLTAGE	115/60/1 (Connection to Icemaker)		
FAN MOTOR	115 V	Total 1.3FLA	65W
EXTERIOR DIMENSIONS (WxDxH)	21-15/16" x 15-11/16" x 17-7/8" (557 x 398 x 454 mm)		
DIMENSIONS INCLUDING LEGS (WxDxH)	24" x 18-1/8" x 32-13/16" (610 x 460 x 834 mm)		
EXTERIOR FINISH	Galvanized Steel		
WEIGHT	Net 61 lbs. (28 kg)	Shipping 68 lbs. (31 kg)	
CONNECTIONS - ELECTRIC	Permanent - Connection		
- REFRIGERANT	Discharge Line 1-1/16"-12 UNF Fitting (#10 AEROQUIP)		
	Liquid Line	5/8"-18 UNF Fitting (#6 AEROQUIP)	
CONDENSER	Air-cooled, Fin and tube type		
FAN MOTOR PROTECTION	Thermal Protection		
REFRIGERANT CONTROL	Condensing Pressure Regulator		
REFRIGERANT CHARGE	R-404A	1 lb. 14 oz.	(850g)
DESIGN PRESSURE	High 467 PSIG		
OPERATING CONDITIONS	VOLTAGE RANGE	104 ~ 127 V	
	AMBIENT TEMP.	-20 ~ 122 °F	
ACCESSORIES -SUPPLIED	Leg		2 pcs
	Hex. Head Bolt w/Washer	8 x 16	8 pcs
	Hex. Nut	8	8 pcs
DRAWING NO. (DIMENSION)	441211		

Note: We reserve the right to make changes in specifications and design without prior notice.

II. General Information

A. Construction

1. KM-650MAH (air-cooled)

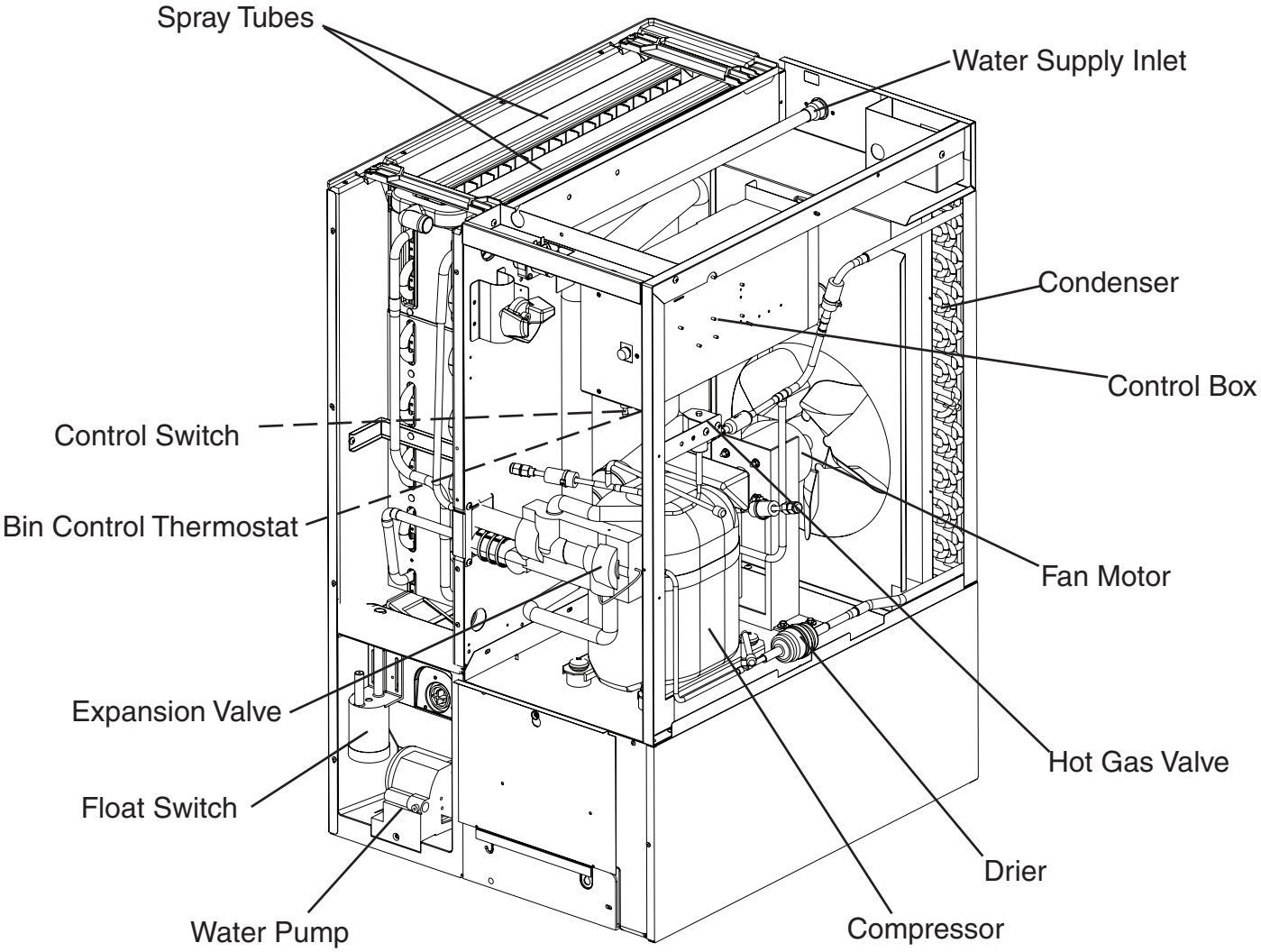

2. KM-650MWH (water-cooled)

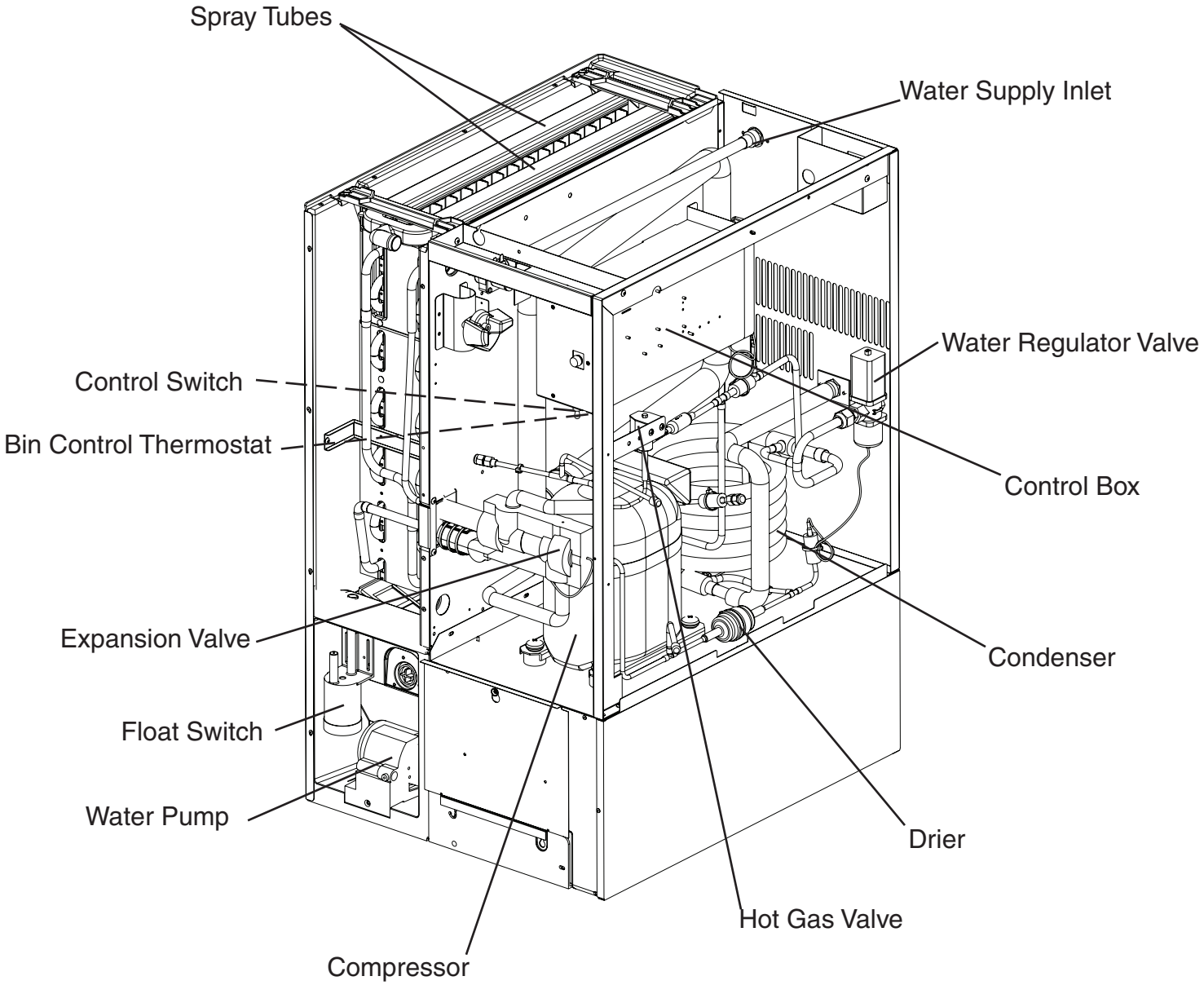

3. KM-650MRH (remote air-cooled)

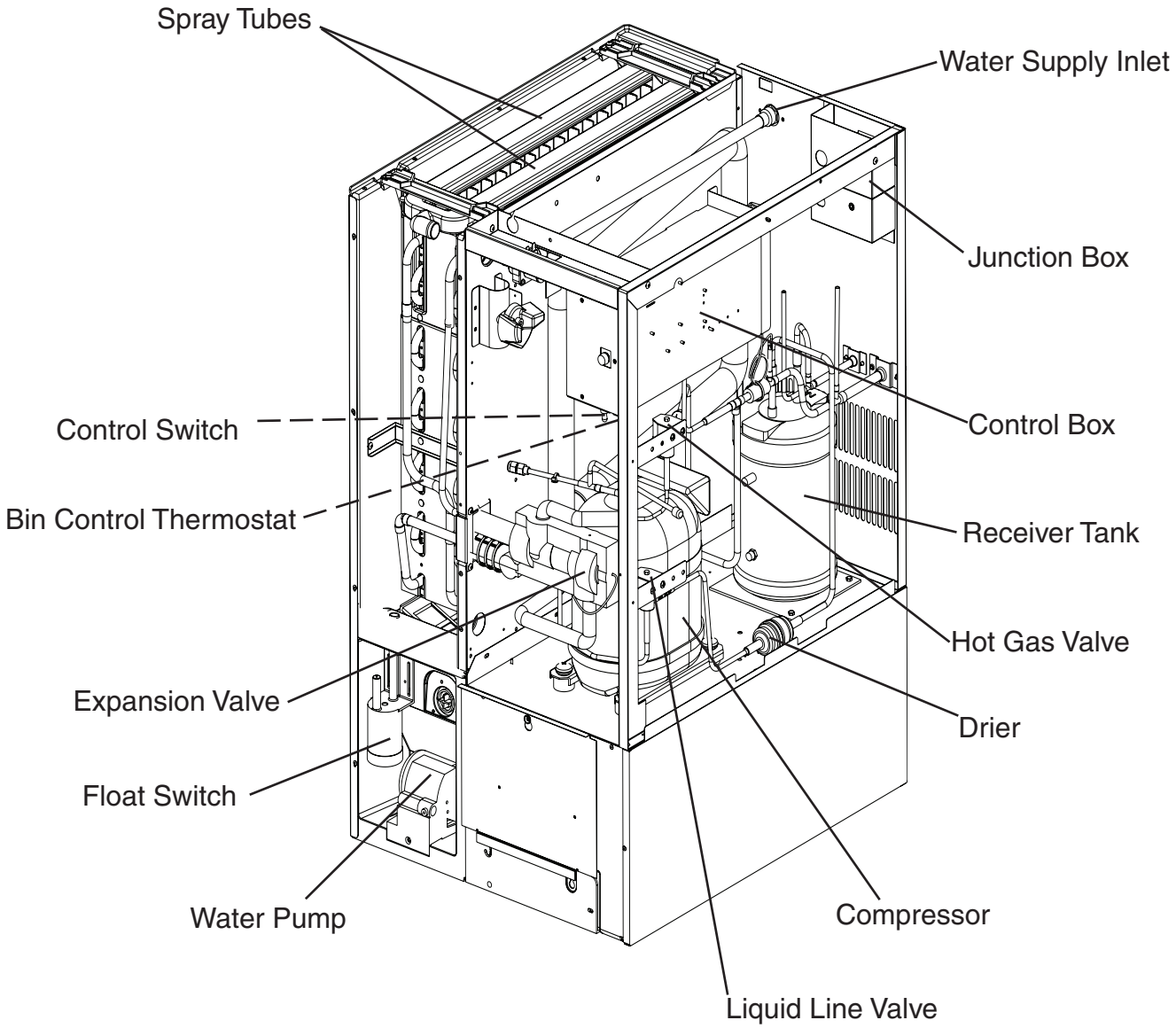

B. Sequence of Operation

The steps in the sequence are as outlined below. When power is supplied, a 5 second delay occurs at startup. Note that the order of the LEDs from the outer edge of the board is 1, 4, 3, 2.

1. One Minute Fill Cycle

LED 4 is on. WV opens and the fill period begins. After 1 minute, the board checks for a closed F/S. If F/S is closed, the harvest cycle begins. If not, WV will remain energized through additional 1 minute cycles until water enters the sump and F/S closes. This serves as a low water safety to protect the water pump.

2. Initial Harvest Cycle

LEDs 1, 4, and 2 are on. WV remains open, Comp and FMR energize, HGV opens, and harvest begins. As the evaporator warms, the thermistor located on the suction line checks for a 48°F (9°C) temperature. When 48°F (9°C) is reached, a 3.9 kΩ signal turns the harvest over to the adjustable harvest timer which is factory set for normal conditions. The timer has settings of 60, 90, 120, and 180 seconds (dip switch 1 & 2). The water valve is open during harvest for a maximum of 6 minutes or the length of harvest, whichever is shorter. When the harvest timer completes its count down, the harvest cycle is complete and the freeze cycle starts. The minimum total time allowed by the board for a complete harvest cycle is 2 minutes.

3. Freeze Cycle

LED 1 is on. Comp and FMR continue to run, PM and FMS energize, LLV opens, HGV and WV close and the freeze cycle starts. For the first 5 minutes the control board will not accept a signal from F/S. This 5 minute minimum freeze acts as a short cycle protection. At the end of 5 minutes, F/S assumes control. As ice builds on the evaporator the water level in the sump lowers. The freeze continues until F/S opens and terminates ice production.

4. Pump-Out Cycle

LEDs 1, 3, and 2 are on. Comp and FMR continue to run, HGV opens, LLV closes, and FMS deenergizes. PM stops for 2 seconds and reverses, taking water from the bottom of the sump and forcing pressure against the check valve seat allowing water to go through the check valve and down the drain. At the same time water flows through the small tube to power flush the F/S. When the pump-out timer stops counting, the pump out is complete. Pump out always occurs on the 2nd harvest after startup. Then, depending on the control board setting, pump out occurs every cycle, or every 2nd, 5th or 10th cycle (dip switch 5 & 6).

5. Normal Harvest Cycle

LEDs 1, 4, and 2 are on. Comp and FMR continue to run, HGV remains open and WV opens. As the evaporator warms, the thermistor reaches 48°F (9°C). The control board then receives the thermistor's 3.9 kΩ signal and starts the harvest timer. The water valve is open during harvest for a maximum of 6 minutes or the length of harvest, whichever is shorter. When the harvest timer completes its count down, the harvest cycle is complete and the next freeze cycle starts. The unit continues to cycle through 3, 4 and 5 sequence until the bin control senses ice and shuts the unit down.

Legend: **Comp**–compressor; **FMR**–remote fan motor; **FMS**–self-contained fan motor; **F/S**–float switch; **HGV**–hot gas valve; **LLV**–Liquid Line Valve; **PM**–pump motor; **WV**–inlet water valve

KM-650MAH, KM-650MWH, KM-650MRH Sequence Flow Chart and Component Operation

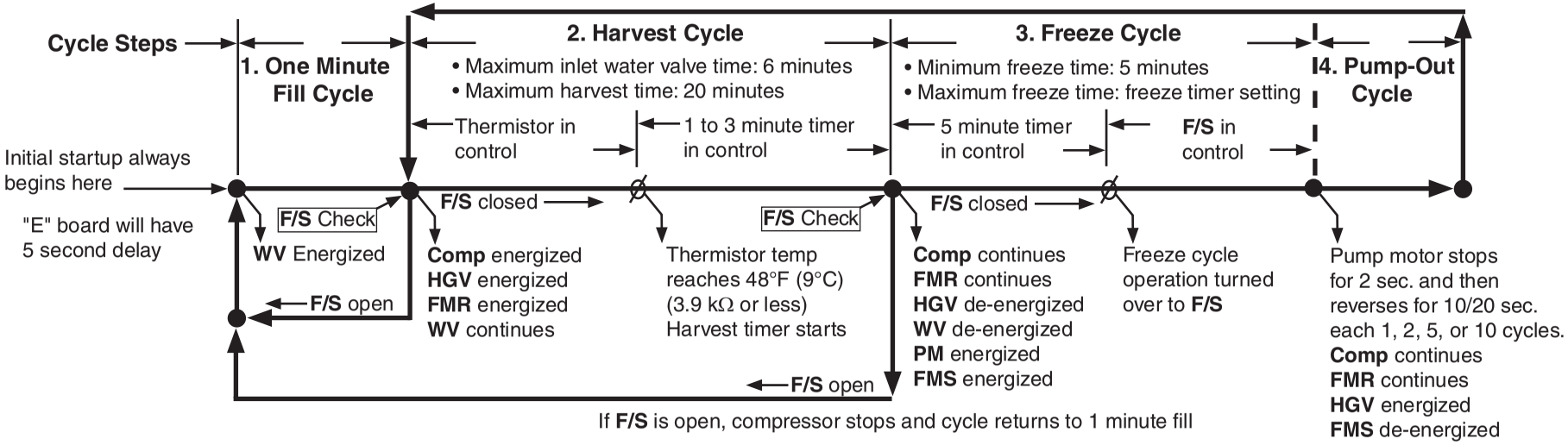

Legend:
Comp - compressor
FMR - remote fan motor
FMS - self-contained fan motor
F/S - float switch
HGV - hot gas valve
PM - pump motor
WV - inlet water valve

Components Energized when the Control Switch is in the WASH Position

The WASH position on the control switch is used when cleaning and sanitizing the unit. When in the WASH position, power is supplied to the pump motor. With the cleaning valve closed, the cleaner and sanitizer flow over the outside of the evaporator plate assembly. With the cleaning valve open, the cleaner and sanitizer flow over both the outside and the inside of the evaporator plate assembly.

Note: Close the cleaning valve after cleaning and sanitizing are complete, otherwise the unit will not re-start when the control switch is placed in the ICE position.

C. Control Board

- A HOSHIZAKI exclusive solid-state control is employed in KM-650MAH, KM-650MWH and KM-650MRH Modular Crescent Cubers.
- All models are pretested and factory-adjusted.

CAUTION

1. Fragile, handle very carefully.
2. A control board contains integrated circuits, which are susceptible to failure due to static discharge. It is especially important to touch the metal part of the unit when handling or replacing the board.
3. Do not touch the electronic devices on the board or the back of the board to prevent damage to the board.
4. Do not change wiring and connections. Do not misconnect K3, K4 and K5, because the same connector is used for the thermistor and float switch. K4 is not connected.
5. Always replace the whole board assembly if it goes bad.
6. Do not short out power supply to test for voltage.

1. Control Board Layout

Control Products "E" Control Board

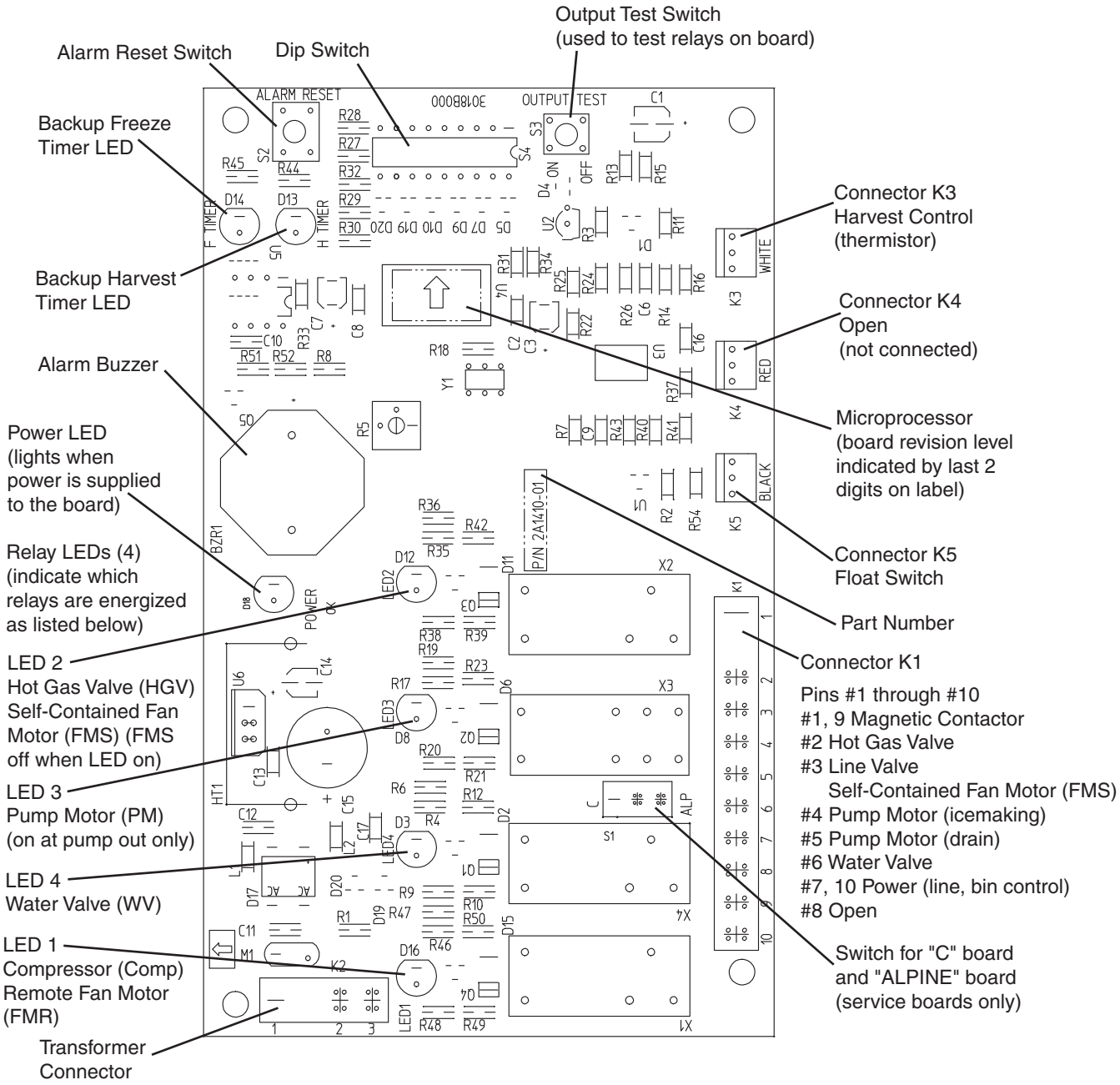

Control Board	
Part Number	2A1410-01 (factory); **2A1410-02 (service)**
Type	HOS-001A (Control Products - 10 Pin)

2. Features

a) Maximum Water Supply Period – 6 minutes

Inlet water valve opening, in the harvest cycle, is limited by the harvest timer. The water valve cannot remain open longer than the maximum period. The water valve can close in less than six minutes if the harvest cycle is completed.

b) Harvest Backup Timer and Freeze Timer

The harvest backup timer shuts down the icemaker if, for two cycles in a row, the harvest cycle takes more than 20 minutes to complete. The control board will signal this problem using 2 beeps every 3 seconds.

The freeze timer shuts down the icemaker if, for two cycles in a row, the freeze cycle takes longer than the time specified to complete. The control board will signal this problem using 3 beeps every 3 seconds. The time is factory set using dip switches 9 & 10.

The reset button on the control board must be pressed with power on to reset either of these safeties.

c) High Temperature Safety

The temperature of the suction line in the refrigeration circuit is limited by the high temperature safety. This protects the unit from excessively high temperatures. If the evaporator temperature rises above 127 ± 7°F (53 ± 4°C), the thermistor operates the safety. This shuts down the circuit and the icemaker automatically stops.

The control board will signal this problem using 1 beep every 3 seconds. The reset button on the control board must be pressed with power on to reset the safety.

d) Low Water Safety

If the pump motor is operated without water, the mechanical seal can fail. To prevent this type of failure, the control board checks the position of the float switch at the end of the initial one minute water fill cycle and at the end of each harvest cycle.

If the float switch is in the up position (electrical circuit closed), the control board changes to the ice making cycle. If the float switch is in the down position (electrical circuit open), the control board changes to additional one minute water fill cycles until water enters the sump and the float switch closes. When the float switch closes, the control board changes to the ice making cycle. The unit will not start without adequate water in the sump. This serves as a low water safety to protect the pump motor from mechanical seal failure.

For water-cooled model, if the water is shut off, the unit is protected by the high pressure switch.

e) High Voltage and Low Voltage Cut-outs

The maximum and minimum allowable supply voltages of this icemaker are limited by the high voltage and low voltage cut-outs.

If miswiring (especially on single phase 3 wire models) causes excessive voltage (147Vac ±5% or more) on the control board, the high voltage cut-out shuts down the circuit in 3 seconds and the icemaker automatically stops. The control board will signal this problem using 7 beeps every 3 seconds.

The icemaker also automatically stops in cases of insufficient voltage (92Vac ±5% or less). The control board will signal this problem using 6 beeps every 3 seconds.

When the proper supply voltage is resumed, the icemaker *automatically* starts running again.

f) LED Lights and Audible Alarm Safeties

The red LED indicates proper control voltage and will remain on unless a control voltage problem occurs. At startup a 5 second delay occurs while the board conducts an internal timer check. A short beep occurs when the power switch is turned OFF.

The green LEDs 1 through 4 energize and sequence from initial startup as listed in the table below. Note that the order of the LEDs from the outer edge of the board is 1, 4, 3, 2. For more information, see "II.B. Sequence of Operation."

Sequence Step	LED	Energized Components	Time LEDs are On		
			Min.	Max.	Avg.
1 Minute Fill Cycle	4	WV			60 seconds
Harvest Cycle	1, 4, and 2	WV, HGV, Comp, FMR	2 minutes	20 minutes	3 to 5 minutes
Freeze Cycle	1	Comp, PM, FMR/FMS, LLV	5 minutes	freeze timer setting	30 to 35 minutes
Reverse Pump Out	1, 3, and 2	Comp, HGV, PM, FMR	10 seconds	20 seconds	factory setting

The built in safeties shut down the unit and have alarms as follows:

No. of Beeps (every 3 sec.)	Type of Alarm	Notes
1	High Evaporator Temp. (temperature > 127°F) (53°C)	Check for harvest problem (stuck HGV or relay), hot water entering unit, stuck HM, or shorted thermistor.
2	Harvest Backup Timer (harvest > 20 min. for two cycles in a row)	Orange LED marked H TIMER lights up. Check for open thermistor, HGV not opening, TXV leaking by, low charge, or inefficient compressor.
3	Freeze Timer (freeze > specified setting for two cycles in a row) Timer is factory set using dip switches 9 & 10	Yellow LED marked F TIMER lights up. Check for F/S stuck closed (up), WV leaking by, HGV leaking by, TXV not feeding properly, low charge, HM not bypassing, or inefficient compressor.
To manually reset the above safeties, press the alarm reset button with the power supply on.		
6	Low Voltage (92Vac ±5% or less)	Red LED will turn off if voltage protection operates. The control voltage safeties automatically reset when voltage is corrected.
7	High Voltage (147Vac ±5% or more)	

Legend: **Comp**–compressor; **FMR**–remote fan motor; **FMS**–self-contained fan motor; **F/S**–float switch; **HGV**–hot gas valve; **HM**–headmaster (C.P.R.); **LLV**–Liquid Line Valve; **PM**–pump motor; **TXV**–thermostatic expansion valve; **WV**–inlet water valve

3. Controls and Adjustments

a) Default Dip Switch Settings

The dip switch is factory-adjusted to the following positions:

Dip Switch No.	1	2	3	4	5	6	7	8	9	10
KM-650MAH	OFF	OFF	OFF	OFF	ON	ON	OFF	OFF	OFF	OFF
KM-650MWH	OFF	OFF	OFF	OFF	ON	ON	OFF	OFF	OFF	OFF
KM-650MRH	OFF	OFF	OFF	OFF	ON	ON	OFF	OFF	ON	OFF

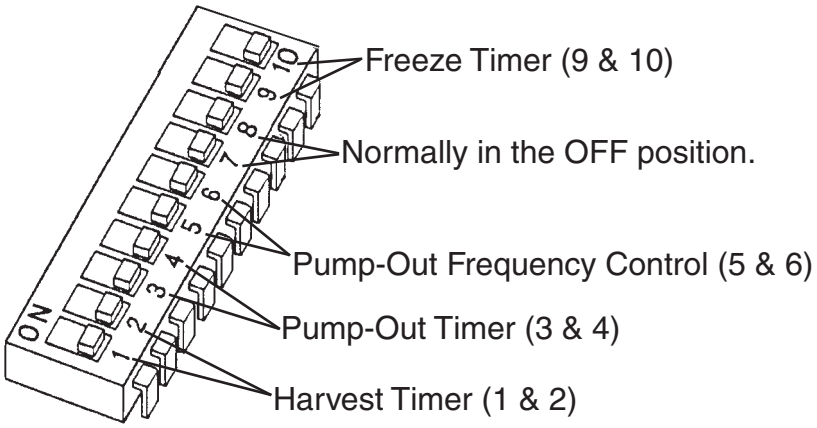

b) Harvest Control – Thermistor

A thermistor (semiconductor) is used for a harvest control sensor. The resistance varies depending on the suction line temperatures. The thermistor detects the temperature of the evaporator outlet to start the harvest timer. No adjustment is required. If necessary, check for resistance between thermistor leads, and visually check the thermistor mounting, located on the suction line next to the evaporator outlet.

Temperature (°F)	Temperature (°C)	Resistance (kΩ)
0	-18	14.401
10	-12	10.613
32	0	6.000
50	10	3.871
70	21	2.474
90	32	1.633

Check a thermistor for resistance by using the following procedure:

1) Disconnect the connector K3 on the board.
2) Remove the thermistor. See "V.K. Removal and Replacement of Thermistor."
3) Immerse the thermistor sensor portion in a glass containing ice and water for 2 or 3 minutes.
4) Check for a resistance between thermistor leads. Normal reading is within 3.5 to 7 kΩ. Replace the thermistor if it exceeds the normal reading.

c) Harvest Timer (dip switch 1 & 2)

The harvest timer starts counting when the thermistor reads 48°F (9°C) at the evaporator outlet.

No adjustment is required under normal use, as the harvest timer is adjusted to the suitable position. However, a setting longer than the factory setting may be advised in cases where the flush provided at harvest needs to be prolonged for extra cleaning. Before changing this setting, call the HOSHIZAKI Technical Support Department at 1-800-233-1940 for recommendations. Keep in mind that setting the harvest timer to a longer setting will decrease 24 hour production.

Dip Switch Setting		Time (seconds)
No. 1	No. 2	
OFF	OFF	60
ON	OFF	90
OFF	ON	120
ON	ON	180

d) Pump-Out Timer (dip switch 3 & 4)

When a freeze cycle is completed, the pump motor stops, and the icemaker resumes operation in 2 seconds. Then, during cycles when a pump out is called for, the pump motor drains the water tank for the time determined by the pump-out timer. The pump-out timer also acts in place of the harvest timer during cycles with a pump out.

The pump-out timer is factory-adjusted, and no adjustment is required.

Dip Switch Setting		Time (seconds)	
No. 3	No. 4	T1	T2
OFF	OFF	10	150
ON	OFF	10	180
OFF	ON	10	120
ON	ON	20	180

T1: Time to drain the water tank
T2: Harvest timer at pump out

Pump out always occurs on the 2nd harvest after startup. Then, depending on the pump-out frequency control setting (dip switch 5 & 6), pump out occurs every cycle, or every 2nd, 5th or 10th cycle.

e) Pump-Out Frequency Control (dip switch 5 & 6)

The pump motor drains the water tank at the frequency set by the pump-out frequency control.

The pump-out frequency control is factory-adjusted to drain the water tank every 10 cycles, and no adjustment is required. However, where water quality is bad and the icemaker needs a pump drain more often, the pump-out frequency can be adjusted as shown in the table below.

Dip Switch Setting		Frequency
No. 5	No. 6	
OFF	OFF	every cycle
ON	OFF	every 2 cycles
OFF	ON	every 5 cycles
ON	ON	every 10 cycles

f) Freeze Timer (dip switch 9 & 10)

CAUTION

Adjust to proper specification, or the unit may not operate correctly.

The freeze timer setting determines the maximum allowed freeze time to prevent possible freeze-up issues. Upon termination of freeze timer, machine initiates the harvest cycle. After 2 consecutive timer terminations, machine will shut down, possibly indicating a problem.

The freeze timer is factory adjusted and no adjustment is required.

Dip Switch Setting		Time (minutes)
No. 9	No. 10	
OFF	OFF	60
OFF	ON	50
ON	OFF	70
ON	ON	60

g) Bin Control

CAUTION

When the ambient temperature is below 45°F (7°C), the bin control thermostat operates to stop the icemaker even if the ice storage bin is empty. When the thermostat is set in the prohibited range, the icemaker operates continuously even if the ice storage bin is filled with ice. Setting in the prohibited range might cause severe damage to the icemaker resulting in failure.

No adjustment is required under normal use, as the bin control is factory-adjusted. Adjust it, if necessary, so that the icemaker stops automatically within 10 seconds after ice contacts the bin control thermostat bulb.

4. Control Board Check Procedure

Before replacing a control board that does not show a visible defect and that you suspect is bad, always conduct the following check procedure. This procedure will help you verify your diagnosis.

1) Check the dip switch settings to assure that #3, 4, 7, 8, 9, & 10 are in the factory default position. On units with a slide-type output test switch, the output test switch (S3) should be OFF. Switches 1, 2, 5, & 6 are cleaning adjustments and the settings are flexible.

2) Turn the control switch to ICE and check for proper control voltage. If the red LED is ON, the control voltage is good. If the red LED is OFF, check the control transformer circuit.

3) Check the 115 volt input at the 10-pin connector. Check the brown wire at pin #10 to a white neutral wire for 115 volts. (Always choose a white neutral wire to establish a good neutral connection when checking voltages.) A jumper also feeds 115 volts into pin #7. If no voltage is present, check the 115 volt supply circuit.

4) The output test switch provides a relay sequence test. On units with a slide-type output test switch, move the control switch to the OFF position, move the output test switch to the ON position, then move the control switch to the ICE position. On units with a push-type output test switch, make sure the control switch is in the ICE position, then press the output test switch. The correct lighting sequence should be none, 2, 3, 4, 1, and 4, normal sequence every 5 seconds. Components (e.g., the compressor) will cycle during the test. Note that the order of the relays from the outer edge of the board is 1, 4, 3, 2.
   Note: If the LEDs light in a different sequence or the 5–second interval does not occur, the control board is bad and should be replaced.

5) After checking the sequence, place the output test switch back in the OFF position on units with a slide-type switch. The output test switch must remain in the OFF position during normal operation. On units with a push-type output test switch, the unit automatically resumes normal operation after the test. The unit begins normal operation with the 1 minute fill cycle.

5. Control Board Replacement

The application switch located between relay X3 & X4 must be set to match the original board application. Place this switch in the ALP position if there is no white wire supplied to the K1 connector. If there is a white wire, place the switch in the C position. If this switch is placed in the wrong position either the compressor contactor will remain energized with the control switch OFF or the unit will not start.

The dip switches should be adjusted to the factory default settings as outlined in this manual. Dip switch #8 must remain in the OFF position.

III. Technical Information

A. Water Circuit and Refrigeration Circuit

1. KM-650MAH (air-cooled)

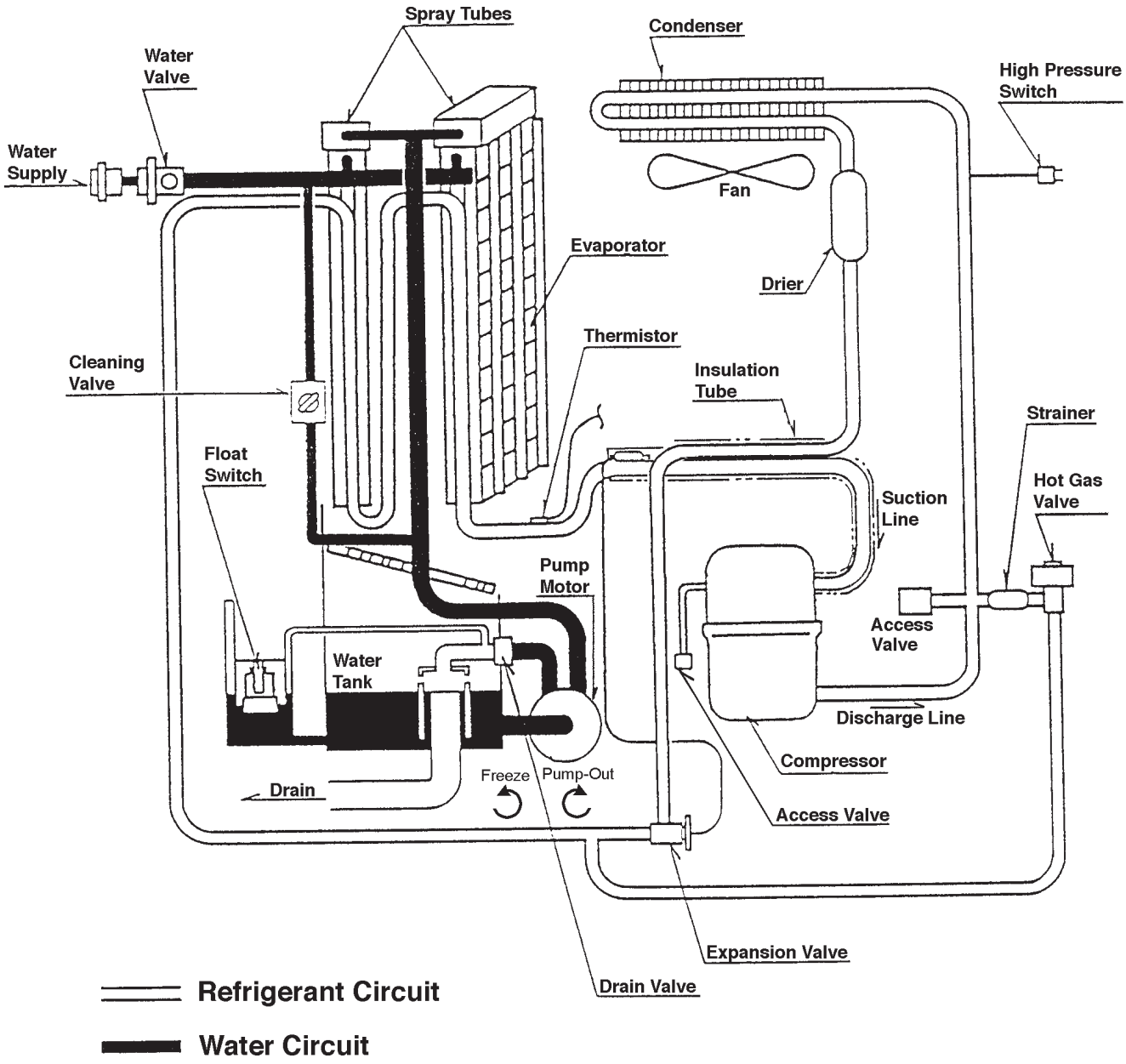

2. KM-650MWH (water-cooled)

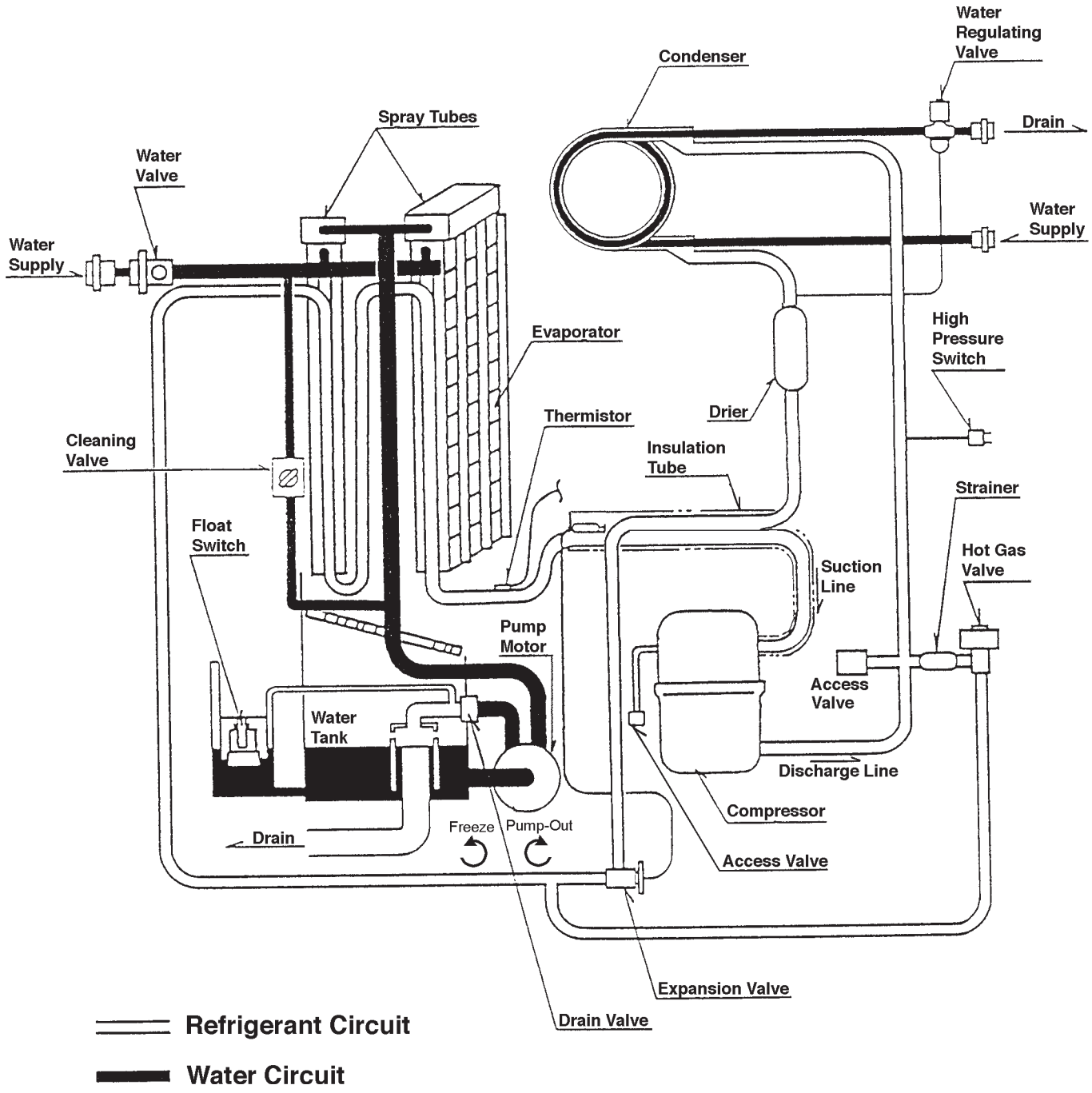

3. KM-650MRH (remote air-cooled)

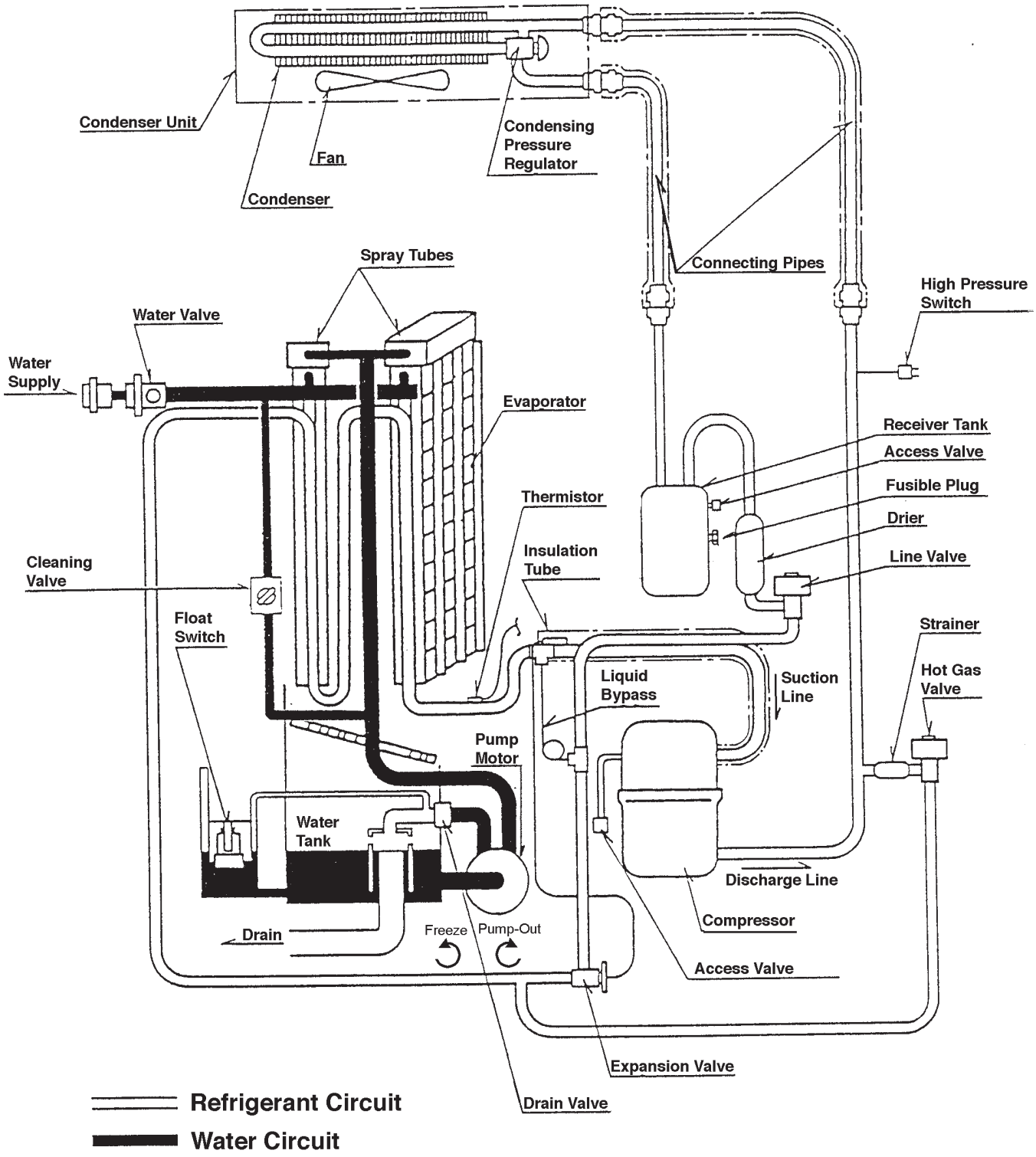

B. Wiring Diagrams

1. KM-650MAH (air-cooled) and KM-650MWH (water-cooled)

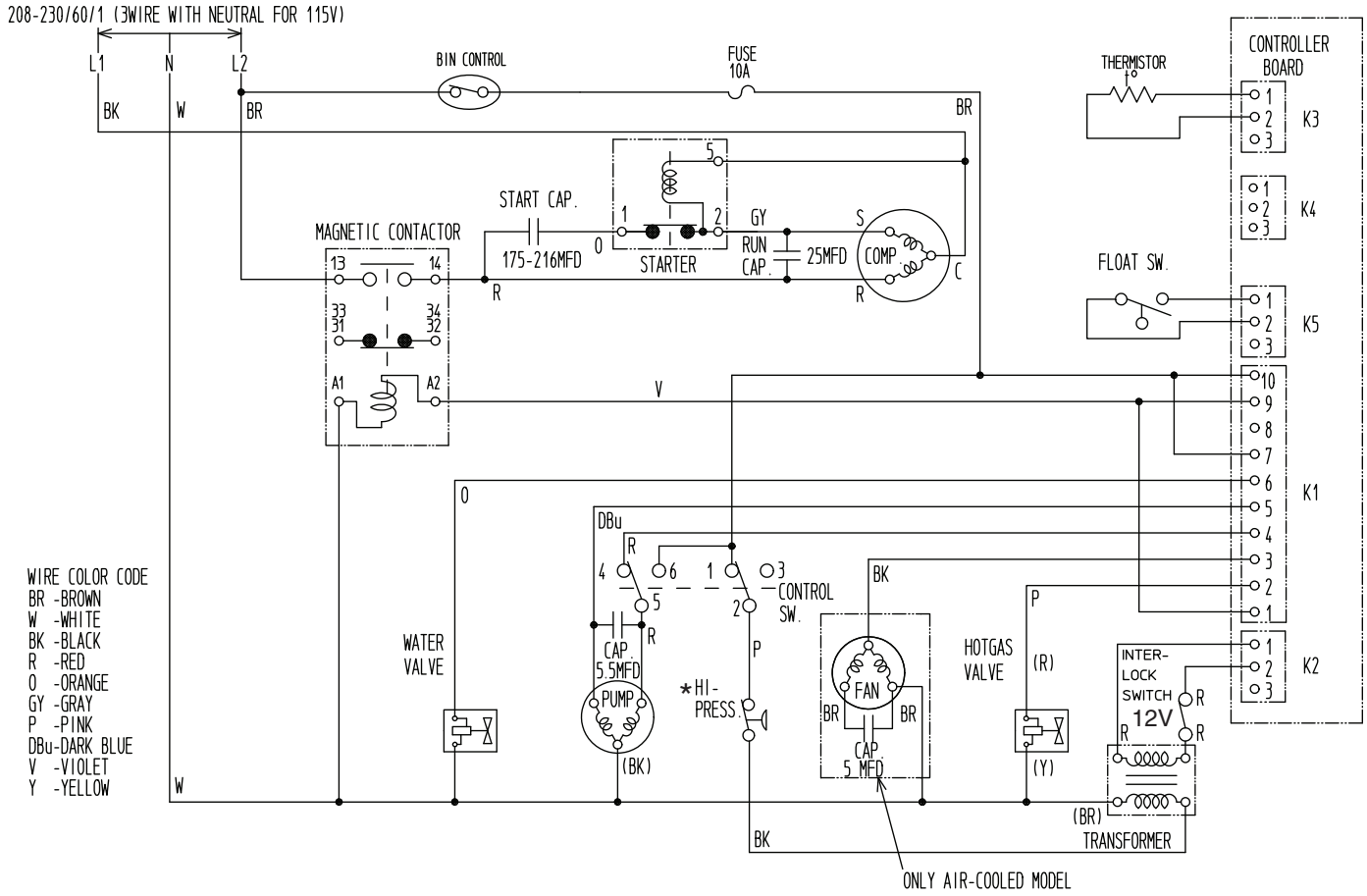

* Pressure Switch		
	Air-Cooled Model	Water-Cooled Model
Cut-out	$412\pm^{21}_{0}$ PSIG	$384\pm^{21}_{0}$ PSIG
Cut-in	327±21 PSIG	284±21 PSIG

2. KM-650MRH (remote air-cooled)

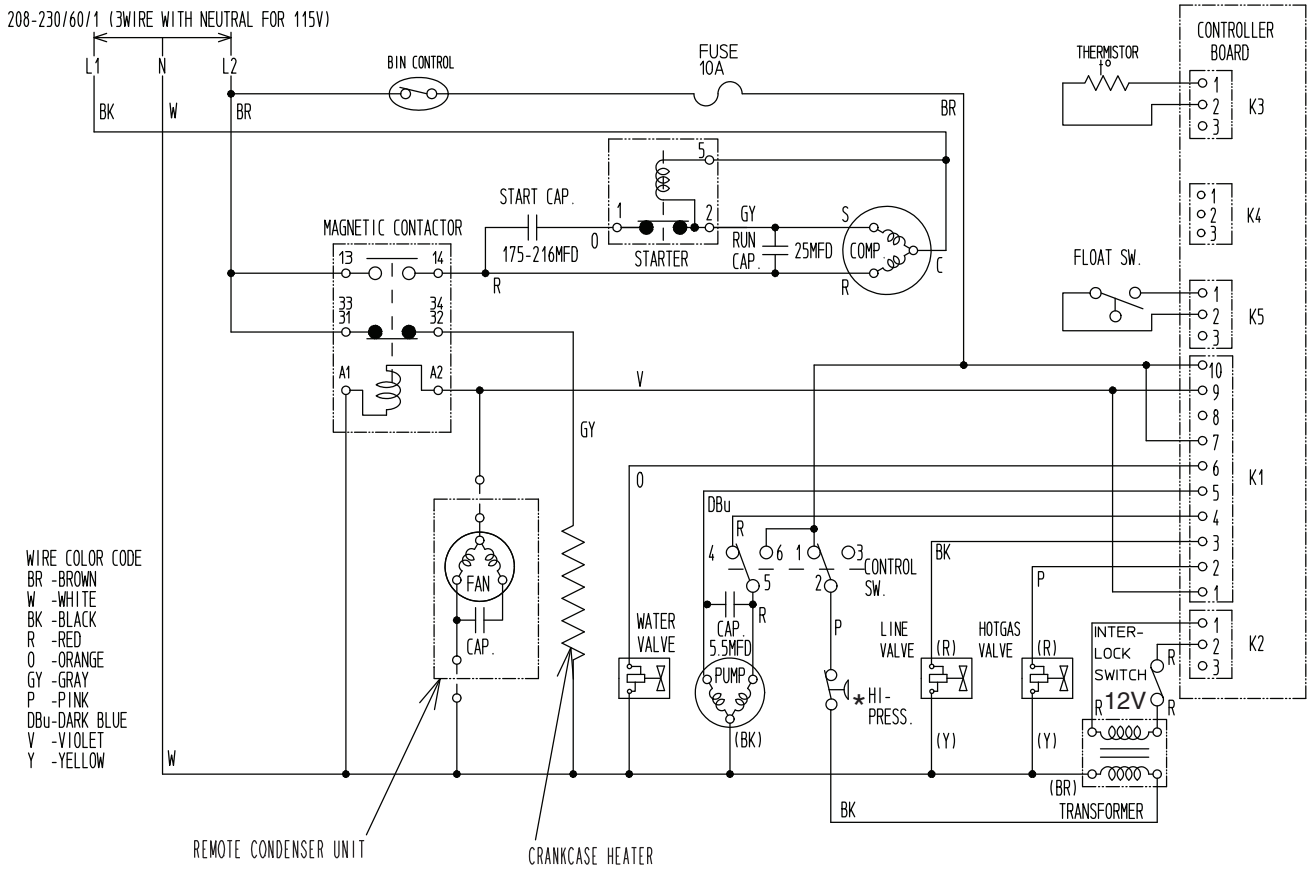

* Pressure Switch	
Cut-out	$412\pm^{21}_{0}$ PSIG
Cut-in	327±21 PSIG

C. Performance Data

1. KM-650MAH (air-cooled)

APPROXIMATE ICE PRODUCTION PER 24 HR.	AMBIENT TEMP. (ºF/ºC)	WATER TEMP. (ºF/ºC)					
		50/10		70/21		90/32	
	70/21	**589**	267	566	257	526	238
	80/27	572	259	537	243	490	222
	90/32	566	257	**512**	232	467	212
lbs./day kg./day	100/38	555	252	501	227	426	193
APPROXIMATE ELECTRIC CONSUMPTION	70/21	**1100**		1141		1170	
	80/27	1131		1195		1209	
	90/32	1141		**1240**		1261	
watts	100/38	1138		1245		1280	
APPROXIMATE WATER CONSUMPTION PER 24 HR.	70/21	**257**	0.97	214	0.81	190	0.72
	80/27	224	0.85	156	0.59	153	0.58
	90/32	214	0.81	**108**	0.41	95	0.36
gal./day m^3/day	100/38	163	0.62	105	0.40	84	0.32
FREEZING CYCLE TIME	70/21	**30**		32		35	
	80/27	31		35		38	
	90/32	32		**37**		40	
min.	100/38	33		38		43	
HARVEST CYCLE TIME	70/21	**4.6**		3.9		3.6	
	80/27	4.1		3.0		3.0	
	90/32	3.9		**2.2**		2.1	
min.	100/38	3.1		2.2		2.0	
HEAD PRESSURE	70/21	**225**	15.8	246	17.3	270	19.0
	80/27	241	17.0	275	19.3	295	20.7
	90/32	246	17.3	**298**	21.0	320	22.5
PSIG kg/cm^2G	100/38	249	17.5	303	21.3	341	24.0
SUCTION PRESSURE	70/21	**53**	3.7	55	3.9	58	4.1
	80/27	54	3.8	57	4.0	61	4.3
	90/32	55	3.9	**59**	4.2	63	4.4
PSIG kg/cm^2G	100/38	56	3.9	60	4.2	67	4.7

TOTAL HEAT OF REJECTION FROM CONDENSER 10,600 BTU/h [AT 90ºF (32ºC) / WT 70ºF (21ºC)]

Note:
1. Pressure data is recorded at 5 minutes into freezing cycle. The data not in **bold** should be used for reference only.
2. We reserve the right to make changes in specifications and design without prior notice.

2. KM-650MWH (water-cooled)

APPROXIMATE ICE PRODUCTION PER 24 HR.	AMBIENT TEMP. (ºF/ºC)	WATER TEMP. (ºF/ºC)					
		50/10		70/21		90/32	
	70/21	**680**	308	675	306	626	284
	80/27	676	307	668	303	595	270
	90/32	675	306	**662**	300	598	271
lbs./day kg./day	100/38	651	295	647	294	540	245
APPROXIMATE ELECTRIC CONSUMPTION	70/21	**1020**		1029		1036	
	80/27	1027		1040		1044	
	90/32	1029		**1050**		1055	
watts	100/38	1028		1051		1060	
APPROXIMATE WATER CONSUMPTION PER 24 HR.	70/21	**662**	2.51	729	2.76	1173	4.44
	80/27	713	2.70	817	3.09	1457	5.52
	90/32	729	2.76	**890**	3.37	1457	5.52
gal./day m^3/day	100/38	980	3.71	1023	3.87	1977	7.49
FREEZING CYCLE TIME	70/21	**27**		28		30	
	80/27	28		30		32	
	90/32	28		**31**		33	
min.	100/38	29		31		35	
HARVEST CYCLE TIME	70/21	**4.7**		4.1		3.7	
	80/27	4.3		3.4		3.1	
	90/32	4.1		**2.8**		2.5	
min.	100/38	3.4		2.7		2.1	
HEAD PRESSURE	70/21	**231**	16.2	231	16.2	238	16.7
	80/27	231	16.2	231	16.2	242	17.0
	90/32	231	16.2	**231**	16.2	240	16.9
PSIG kg/cm^2G	100/38	235	16.5	233	16.4	249	17.5
SUCTION PRESSURE	70/21	**50**	3.5	51	3.6	53	3.7
	80/27	51	3.6	54	3.8	54	3.8
	90/32	51	3.6	**56**	3.9	56	4.0
PSIG kg/cm^2G	100/38	51	3.6	56	3.9	57	4.0

TOTAL HEAT OF REJECTION FROM CONDENSER	10,000 BTU/h [AT 90ºF (32ºC) / WT 70ºF (21ºC)]
TOTAL HEAT OF REJECTION FROM COMPRESSOR	1,400 BTU/h [AT 90ºF (32ºC) / WT 70ºF (21ºC)]
WATER FLOW FOR CONDENSER	77 gal./h [AT 100ºF (38ºC) / WT 90ºF (32ºC)]
PRESSURE DROP OF COOLING WATER LINE	less than 10 PSIG

Note:

1. Pressure data is recorded at 5 minutes into freezing cycle. The data not in **bold** should be used for reference only.
2. We reserve the right to make changes in specifications and design without prior notice.

3. KM-650MRH (remote air-cooled)

APPROXIMATE ICE PRODUCTION PER 24 HR.	AMBIENT TEMP. (ºF/ºC)	WATER TEMP. (ºF/ºC)					
		50/10		70/21		90/32	
	70/21	**615**	279	597	271	556	252
	80/27	601	273	574	260	523	237
	90/32	597	271	**554**	251	506	230
lbs./day kg./day	100/38	583	264	543	246	462	210
APPROXIMATE ELECTRIC CONSUMPTION	70/21	**1150**		1179		1212	
	80/27	1172		1218		1247	
	90/32	1179		**1250**		1281	
watts	100/38	1183		1257		1310	
APPROXIMATE WATER CONSUMPTION PER 24 HR.	70/21	**266**	1.01	220	0.83	198	0.75
	80/27	231	0.87	161	0.61	160	0.61
	90/32	220	0.83	**111**	0.42	100	0.38
gal./day m^3/day	100/38	169	0.64	108	0.41	91	0.34
FREEZING CYCLE TIME	70/21	**29**		31		33	
	80/27	30		33		36	
	90/32	31		**34**		37	
min.	100/38	32		35		40	
HARVEST CYCLE TIME	70/21	**4.6**		3.8		3.6	
	80/27	4.0		2.8		3.0	
	90/32	3.8		**2.0**		2.0	
min.	100/38	3.0		2.0		2.0	
HEAD PRESSURE	70/21	**214**	15.1	233	16.4	254	17.8
	80/27	229	16.1	258	18.2	275	19.4
	90/32	233	16.4	**279**	19.6	298	21.0
PSIG kg/cm^2G	100/38	235	16.6	283	19.9	315	22.2
SUCTION PRESSURE	70/21	**51**	3.6	53	3.8	56	4.0
	80/27	53	3.7	56	3.9	59	4.1
	90/32	53	3.8	**58**	4.1	61	4.3
PSIG kg/cm^2G	100/38	54	3.8	59	4.2	**64**	4.5

TOTAL HEAT OF REJECTION FROM CONDENSER	9400 BTU/h [AT 90ºF (32ºC) / WT 70ºF (21ºC)]
TOTAL HEAT OF REJECTION FROM COMPRESSOR	1600 BTU/h [AT 90ºF (32ºC) / WT 70ºF (21ºC)]
CONDENSER VOLUME	40 CU. IN (URC-5F)

Note:
1. Pressure data is recorded at 5 minutes into freezing cycle. The data not in **bold** should be used for reference only.
2. We reserve the right to make changes in specifications and design without prior notice.

IV. Service Diagnosis

A. 10-Minute KM Diagnostic Procedure

The 10 minute check out procedure is basically a sequence check which can be used at unit start-up or for system diagnosis. Using this check out procedure will allow you to diagnose electrical system and component failures in approximately 10 minutes under normal operating conditions of 70°F or warmer air and 50°F or warmer water temperatures. Before conducting a 10 minute checkout, check for correct installation, proper voltage per unit nameplate and adequate water supply. As you go through the procedure, check to assure the components energize and de-energize correctly. If not, those components and controls are suspect. Check for voltage at the 10-pin connector.

1) Turn power OFF and access the control box.

2) Turn power ON and place the control switch in ICE position. A 5 second delay occurs.

3) **One Minute Fill Cycle** – The inlet water valve is energized. After 1 minute, the control board checks the float switch. If the float switch is closed, the unit cycles to harvest. If closed, continue to step 4. If the float switch is open, the unit repeats the 1 minute fill cycle until water enters and the float switch closes (low water safety protection during initial start up and at the end of each harvest). **Diagnosis:** If the water valve does not open, check for no supply voltage at water valve terminals, bad coil, or plugged screen or external filter (no water flow). If unit fails to start harvest, check for open float switch or bad 1 minute timer in board.

4) **Initial Harvest Cycle** – Inlet water valve remains energized, contactor coil energizes to start the compressor (and fan motor on a remote condenser unit), and the hot gas valve energizes. The evaporator warms and the thermistor senses 48°F (9°C). The control board then receives the thermistor's 3.9 kΩ signal and turns operation of harvest over to the harvest timer. The timer completes counting (1 to 3 minutes). The unit then cycles to freeze. **Diagnosis:** Check if compressor is running, hot gas valve is open, water valve still open. Average harvest cycle at factory setting is 2 to 3 minutes. How long does initial harvest last? 1.5 minutes after initial harvest begins, touch the compressor discharge line. Is it hot? If not check refrigerant pressures and compressor operation. If it is hot, touch the inlet line to the evaporator. Is it hot? If it is hot and the freeze cycle is not starting, check the harvest timer adjustment, the thermistor for open circuit, the discharge line temperature, compressor efficiency, and if the hot gas valve is fully open.

5) **Freeze Cycle** – Compressor remains energized, pump motor, (line valve on remote condenser unit), and fan motor energize. The inlet water valve and hot gas valve de-energize. The unit is held in freeze by a 5 minute short cycle protection timer. After 5 minutes, the freeze cycle operation is transferred to the float switch for freeze termination. During the first 5 minutes of freeze, confirm that the evaporator temperature drops. After 7 minutes in freeze, remove the black float switch lead from the K5 connector. The unit should immediately switch to the pump-out cycle. **Diagnosis:** If the evaporator is not cold, check to see if the hot gas valve is still open or if the expansion valve is not opening properly, if the water valve is continuing to fill the reservoir, if there are improper unit pressures, an inoperative compressor, or an inoperative headmaster (C.P.R.) (remote condenser unit only). If the unit remains in

freeze with the float switch removed, replace the board.

Note: Normal freeze cycle will last 20 to 40 minutes depending on model and conditions. Cycle times and pressures should follow performance data provided in this manual.

6) **Pump-Out Cycle (10/20 second pump out)** – the compressor remains energized, the hot gas valve energizes, the fan motor de-energizes, the pump motor stops for 2 seconds and starts in reverse rotation for 10/20 seconds. (This removes contaminants from the water reservoir through the check valve (drain valve) and down the drain and allows for a power flush of the float switch.) Check for clear tubing at the check valve housing and check the unit drain for water flow. **Diagnosis:** If the pump motor does not reverse, check the circuit and capacitor. If water does not pump out, remove the check valve (drain valve) housing and check/clean the valve assembly.

7) **Normal Harvest Cycle** – same as the initial harvest cycle – Return to step 4.

Note: Unit continues to cycle until bin control is satisfied or power is switched OFF. (The pump out cycle can be adjusted to occur every cycle, or every 2, 5, or 10 cycles. The factory default is every 10 cycles.) The unit always restarts at the 1 minute fill cycle.

B. Diagnostic Charts

1. No Ice Production

Problem	Possible Cause		Remedy
[1] The icemaker will not start.	a) Power Supply	1. OFF position.	1. Move to ON position.
		2. Loose connection.	2. Tighten.
		3. Bad contacts.	3. Check for continuity and replace.
		4. Voltage too high or too low.	4. Check and get recommended voltage.
	b) Fuse (Inside fused disconnect, if any)	1. Blown.	1. Check for short circuit and replace.
	c) Control Switch	1. OFF position.	1. Move to ICE position.
		2. Bad contacts.	2. Check for continuity and replace.
	d) Bin Control Thermostat	1. Tripped with bin filled with ice.	1. Remove ice.
		2. Ambient temperature too cool.	2. Increase ambient temperature.
		3. Set too warm.	3. See "II.C.3. Controls and Adjustments, g) Bin Control."
		4. Bulb out of position.	4. Place in position.
		5. Bad contacts.	5. Check for continuity and replace.
	e) High Pressure Control	1. Bad contacts.	1. Check for continuity and replace.
		2. Dirty air filter or condenser.	2. Clean.

Problem	Possible Cause		Remedy
[1] The icemaker will not start. (continued)	e) High Pressure Control (continued)	3. Ambient or condenser water temperature too warm.	3. Reduce temperature.
		4. Refrigerant overcharged.	4. Recharge.
		5. Fan not operating. (except water-cooled model)	5. See chart 1.[6]
		6. Refrigerant line or components plugged.	6. Clean and replace drier.
		7. Condenser water pressure too low or off. (water-cooled model only)	7. Check and get recommended pressure.
	f) Transformer	1. Coil winding opened or shorted.	1. Replace.
	g) Wiring to Control Board	1. Loose connections or open.	1. Check for continuity and replace.
	h) Thermistor	1. Leads shorted or opened and high temperature or harvest backup timer safety operates. (1 beep or 2 beep alarm)	1. See "II.C.3. Controls and Adjustments, b) Harvest Control."
	i) Hot Gas Valve	1. Continues to open in freeze cycle and freeze timer safety operates. (3 beep alarm)	1. Check for hot gas valve stuck open and replace.
	j) Water Supply Line	1. Water supply off and water supply cycle does not finish.	1. Check and get recommended pressure.
		2. Condenser water pressure too low or off and pressure control opens and closes frequently to finally operate high temperature safety. (1 beep alarm)	2. Check and get recommended pressure.
	k) Inlet Water Valve	1. Mesh filter or orifice gets clogged and water supply cycle does not finish.	1. Clean.
		2. Coil winding opened.	2. Replace.
		3. Wiring to water valve.	3. Check for loose connection or open, and replace.
	l) Control Board	1. Defective.	1. See "II.C.4. Control Board Check Procedure."

Problem	Possible Cause		Remedy
[1] The icemaker will not start. (continued)	m) Interlock Switch (Cleaning Valve)	1. OFF position.	1. Move to ON position.
		2. Bad contacts.	2. Check for continuity and replace.
	n) Wash Switch	1. WASH position.	1. Move to ICE position.
		2. Bad contacts.	2. Check and replace.
[2] Water continues to be supplied, and the icemaker will not start.	a) Float Switch	1. Connector disconnected.	1. Place in position.
		2. Leads opened or defective switch.	2. Check and replace.
		3. Float does not move freely.	3. Clean or replace.
	b) Control Board	1. Defective.	1. Replace.
[3] Compressor will not start or stops operating.	a) Magnetic Contactor	1. Bad contacts.	1. Check for continuity and replace.
		2. Coil winding opened.	2. Replace.
	b) Start Capacitor or Run Capacitor	1. Defective.	1. Replace.
	c) Internal Overload Protector Open (check 1 through 3 to the right and d through f below)	1. Loose terminal.	1. Tighten or replace.
		2. Voltage.	2. Check and correct.
		3. Dirty condenser.	3. Clean.
	d) Starter	1. Bad contacts.	1. Check and replace.
		2. Coil winding opened.	2. Replace.
	e) Compressor	1. Wiring to compressor.	1. Check for loose connection or open, and replace.
		2. Defective.	2. Replace.
		3. Protector tripped.	3. Reduce temperature.
	f) Control Board	1. No power to contactor.	1. See "II.C.4. Control Board Check Procedure."
[4] Water continues to be supplied in freeze cycle.	a) Inlet Water Valve	1. Diaphragm does not close.	1. Check for water leaks with icemaker off.
	b) Control Board	1. Defective.	1. See "II.C.4. Control Board Check Procedure."
[5] No water comes from spray tubes. Water pump will not start, or freeze cycle time is too short.	a) Water Supply Line	1. Water pressure too low and water level in water tank too low.	1. Check and get recommended pressure.
	b) Inlet Water Valve	1. Dirty mesh filter or orifice and water level in water tank too low.	1. Clean.
	c) Water System	1. Water leaks.	1. Check connections for water leaks, and replace.

Problem	Possible Cause		Remedy
[5] No water comes from spray tubes. Water pump will not start, or freeze cycle time is too short. (continued)	c) Water System (continued)	2. Clogged.	2. Clean.
		3. Pump out check valve leaking by.	3. Check assembly and clean.
	d) Pump Motor	1. Motor winding opened.	1. Replace.
		2. Bearing worn out.	2. Replace.
		3. Wiring to pump motor.	3. Check for loose connection or open, and replace.
		4. Defective capacitor.	4. Replace.
		5. Defective or bound impeller.	5. Replace and clean.
		6. Mechanical seal worn out.	6. Check and replace.
	e) Control Board	1. Defective.	1. See "II.C.4. Control Board Check Procedure."
[6] Fan motor will not start, or is not operating.	a) Fan Motor	1. Motor winding opened.	1. Replace.
		2. Bearing worn out.	2. Replace.
		3. Wiring to fan motor.	3. Check for loose connection or open, and replace.
		4. Defective capacitor.	4. Replace.
		5. Fan blade bound.	5. Check and replace.
	b) Control Board	1. Defective.	1. See "II.C.4. Control Board Check Procedure."
[7] All components run, but no ice is produced.	a) Refrigerant	1. Undercharged.	1. Check for leaks and recharge.
		2. Air or moisture trapped.	2. Replace drier and recharge.
	b) Compressor	1. Defective valve.	1. Replace.
	c) Hot Gas Valve	1. Continues to open in freeze cycle.	1. Check and replace.
	d) Line Valve	1. Continues to close in freeze cycle.	1. Check and replace.
	e) Inlet Water Valve	1. Water valve is wide open during freeze.	1. Check for water leaks with icemaker off.
	f) Headmaster (C.P.R.) (Remote Unit)	1. Not operating properly and liquid line temperature too warm.	1. Replace headmaster.
	g) Water Supply Line (water-cooled model only)	1. Condenser water pressure too low or off and pressure control opens and closes frequently.	1. Check and get recommended pressure.
	h) Water Regulator (water-cooled model only)	1. Set too high.	1. Adjust or replace. See "V.I. Adjustment of Water Regulating Valve."

2. Evaporator is Frozen Up

Problem	Possible Cause		Remedy
[1] Freeze cycle time is too long.	a) Float Switch	1. Leads short-circuit or defective switch.	1. Check and replace.
		2. Float does not move freely.	2. Clean or replace.
	b) Inlet Water Valve	1. Diaphragm does not close.	1. Check for water leaks with icemaker off.
	c) Control Board	1. Defective.	1. See "II.C.4. Control Board Check Procedure."
[2] All ice formed on evaporator does not fall into bin in harvest cycle.	a) Evaporator	1. Scaled up.	1. Clean.
	b) Water Supply Line	1. Water pressure too low.	1. Check and get recommended pressure.
	c) Water Filter System	1. Dirty/Restricted	1. Replace filter.
	d) Inlet Water Valve	1. Dirty mesh filter or orifice.	1. Clean.
		2. Diaphragm does not close.	2. Check for water leaks with icemaker off.
	e) Ambient and/or water temperature.	1. Too cool.	1. Increase temperature.
	f) Line Valve	1. Continues to open in harvest cycle.	1. Check operation in harvest cycle and replace.
	g) Thermistor	1. Out of position or loose attachment.	1. See "V.I. Removal and Replacement of Thermistor."
	h) Control Board	1. Harvest timer is set too short.	1. Adjust longer, referring to "II.C.3. Controls and Adjustments, c) Harvest Timer.
		2. Defective.	2. See "II.C.4. Control Board Check Procedure."
[3] Other	a) Spray Tubes	1. Clogged.	1. Clean
		2. Out of position.	2. Place in position.
	b) Water System	1. Dirty.	1. Clean.
	c) Refrigerant	1. Undercharged.	1. Check for leaks and recharge.
	d) Expansion Valve	1. Bulb out of position or loose attachment.	1. Place in position.
		2. Defective.	2. Replace.
	e) Hot Gas Valve	1. Coil winding opened.	1. Replace.
		2. Plunger does not move.	2. Replace.
		3. Wiring to hot gas valve.	3. Check for loose connection or open, and replace.
	f) Ice Cube Guide	1. Out of position and ice trapped.	1. Place in position.

Problem	Possible Cause		Remedy
[3] Other (continued)	g) Water Supply Line	1. Too small; requires 3/8" OD line dedicated per machine.	1. Increase water line size.
	h) Water Filter	1. Flow rate too small.	1. Replace with filter that has larger flow rate.

3. Low Ice Production

Problem	Possible Cause	Remedy
[1] Freeze cycle time is long.	a) See chart 1.[3] and check dirty air filter or condenser, ambient or water temperature, water pressure, condenser water regulating valve (water-cooled model), and refrigerant charge.	
	b) See chart 2.[1] and check float switch, inlet water valve and control board.	
	c) Check pump, hot gas valve, headmaster (C.P.R.) (remote air-cooled model), expansion valve, refrigeration check valve, and compressor.	
[2] Harvest cycle time is long.	a) See chart 2.[2] and check control board, thermistor, evaporator, ambient and/or water temperature, water supply line, inlet water valve, line valve, and gas valve.	

4. Abnormal Ice

Problem	Possible Cause		Remedy
[1] Small cubes.	a) Ice Cube Guide	1. Out of position. Circulated water falls into bin.	1. Place in position.
	b) See chart 1.[5] and check water supply line, inlet water valve, water system, pump motor, and control board.		
	c) Pump Out Check Valve	1. Dirty.	1. Clean.
[2] Cloudy or irregular cubes.	a) See chart 2.[1] and 2.[3], and check float switch, inlet water valve, control board, spray tubes, water system, refrigerant charge, and expansion valve.		
	b) Spray Guide	1. Dirty.	1. Clean.
	c) Water Quality	1. High hardness or contains impurities.	1. Install a water softener or filter.

5. Other

Problem	Possible Cause		Remedy
[1] Icemaker will not stop when bin is filled with ice.	a) Bin Control Thermostat	1. Set too cold.	1. Adjust warmer.
		2. Defective.	2. Replace
[2] Abnormal noise.	a) Pump Motor	1. Bearings worn out.	1. Replace
	b) Fan Motor	1. Bearings worn out.	1. Replace
		2. Fan blade deformed.	2. Replace fan blade.
		3. Fan blade does not move freely.	3. Replace.
	c) Compressor	1. Bearings worn out or cylinder valve broken.	1. Replace.

Problem	Possible Cause		Remedy
[2] Abnormal noise. (continued)	c) Compressor (continued)	2. Mounting pad out of position.	2. Reinstall.
	d) Refrigerant Lines	1. Rub or touch other lines or surfaces.	1. Replace.
[3] Ice in storage bin often melts.	a) Drain Line(s)	1. Plugged.	1. Clean.
	b) Icemaker and Bin	1. Drains not run separately.	1. Separate the drain lines.
	c) Ice Cube Guide	1. Out of position. Circulated water falls into bin.	1. Place in position.

V. Removal and Replacement of Components

IMPORTANT

Ensure all components, fasteners and thumbscrews are securely in place after the equipment is serviced.

IMPORTANT

1. The Polyol Ester (POE) oils used in R-404A units can absorb moisture quickly. Therefore it is important to prevent moisture from entering the system when replacing or servicing parts.
2. Always install a new drier every time the sealed refrigeration system is opened. Do not replace the drier until after all other repair or replacement has been made.
3. Do not leave the system open for longer than 15 minutes when replacing or servicing parts.

A. Service for Refrigerant Lines

1. Refrigerant Recovery

The icemaker unit is provided with refrigerant access valves. Using proper refrigerant practices recover the refrigerant from the access valves and store it in an approved container. Do not discharge the refrigerant into the atmosphere.

2. Evacuation and Recharge (R-404A)

1) Attach service manifold hoses and a vacuum pump to the system. Be sure to connect charging hoses to both high and low-side access valves.

IMPORTANT

The vacuum level and vacuum pump may be the same as those for current refrigerants. However, the rubber hose and gauge manifold to be used for evacuation and refrigerant charge should be exclusively for POE oils.

2) Turn on the vacuum pump. Never allow the oil in the vacuum pump to flow backward.

3) Allow the vacuum pump to pull down to a 29.9" Hg vacuum. Evacuating period depends on pump capacity.

4) Close the low-side valve and high-side valve on the service manifold.

5) Disconnect the vacuum pump and attach a refrigerant service cylinder to the high-side line. Remember to loosen the connection and purge the air from the hose.
For air-cooled and water-cooled models, see the nameplate for the required refrigerant charge. For remote air-cooled models, see the charge label in the machine compartment. Hoshizaki recommends only virgin refrigerant or reclaimed refrigerant which meets ARI Standard No. 700-88 be used.

6) A liquid charge is recommended for charging an R-404A system. Invert the service cylinder and place it on scales. Open the high-side, service manifold valve.
7) Allow the system to charge with liquid until the proper charge weight is met.
8) If necessary, add any remaining charge to the system through the low-side. Use a throttling valve or liquid dispensing device to add the remaining liquid charge through the low-side access port with the unit running.
9) Close the two refrigerant access valves, and disconnect the service manifold hoses.
10) Cap the access valves to prevent a possible leak.

B. Brazing

DANGER

1. Refrigerant R-404A itself is not flammable at atmospheric pressure and temperatures up to 176°F (80°C).
2. Refrigerant R-404A itself is not explosive or poisonous. However, when exposed to high temperatures (open flames) R-404A can be decomposed to form hydrofluoric acid and carbonyl fluoride both of which are hazardous.
3. Always recover the refrigerant and store it in an approved container. Do not discharge the refrigerant into the atmosphere.
4. Do not use silver alloy or copper alloy containing arsenic.
5. Do not use R-404A as a mixture with pressurized air for leak testing. Refrigerant leaks can be detected by charging the unit with a little refrigerant, raising the pressure with nitrogen and using an electronic leak detector.

Note: Because the pipes in the evaporator case are specially coated to resist corrosion, it is important to make connections outside the evaporator case when possible. If it is necessary to braxe inside the evaporator case, use sandpaper to remove the coating from the brazing connections before unbrazing the components.

C. Removal and Replacement of Compressor

IMPORTANT

Always install a new drier every time the sealed refrigeration system is opened. Do not replace the drier until after all other repair or replacement has been made.

Note: When replacing a compressor with a defective winding, be sure to install the new start capacitor and start relay supplied with the replacement compressor. Due to the ability of the POE oil in the compressor to absorb moisture quickly, the compressor must not be opened more than 15 minutes for replacement or service. Do not mix lubricants of different compressors even if both are charged with R-404A, except when they use the same lubricant.

1) Turn off the power supply.

2) Remove the panels.
3) Recover the refrigerant and store it in an approved container.
4) Remove the terminal cover on the compressor and disconnect the compressor wiring.
5) Remove the hold-down bolts, washers and rubber grommets.
6) Remove the discharge and suction pipes.
7) Remove the compressor. Unpack the new compressor package.
8) Attach the rubber grommets of the prior compressor.
9) Place the compressor in position and secure it using the bolts and washers.
10) Remove the drier, then place the new drier in position.
11) Remove the plugs from the suction, discharge and process pipes.
12) Braze all fittings while purging with nitrogen gas flowing at a pressure of 3 to 4 PSIG.
13) Check for leaks using nitrogen gas (140 PSIG) and soap bubbles.
14) Evacuate the system, and charge it with refrigerant. For air-cooled and water-cooled models, see the nameplate for the required refrigerant charge. For remote air-cooled models, see the charge label in the machine compartment.
15) Connect the terminals and replace the terminal cover in its correct position.
16) Replace the panels in their correct positions.
17) Turn on the power supply.

D. Removal and Replacement of Drier

IMPORTANT

Always install a new drier every time the sealed refrigeration system is opened. Do not replace the drier until after all other repair or replacement has been made.

1) Turn off the power supply.
2) Remove the panels.
3) Recover the refrigerant and store it in an approved container.
4) Remove the drier, then place the new drier in position. Install the new drier with the arrow on the drier in the direction of the refrigerant flow.
5) Braze all fittings while purging with nitrogen gas flowing at a pressure of 3 to 4 PSIG.
6) Check for leaks using nitrogen gas (140 PSIG) and soap bubbles.
7) Evacuate the system, and charge it with refrigerant. For air-cooled and water-cooled models, see the nameplate for the required refrigerant charge. For remote air-cooled models, see the charge label in the machine compartment.
8) Replace the panels in their correct positions.
9) Turn on the power supply.

E. Removal and Replacement of Expansion Valve

IMPORTANT

Sometimes moisture in the refrigeration circuit exceeds the drier capacity and freezes up at the expansion valve. Always install a new drier every time the sealed refrigeration system is opened. Do not replace the drier until after all other repair or replacement has been made.

1) Turn off the power supply.
2) Remove the panels.
3) Recover the refrigerant and store it in an approved container.
4) Remove the insulation and the expansion valve bulb on the suction line.
5) Remove the expansion valve cover and disconnect the expansion valve. Place the new expansion valve in position.
6) Remove the drier, then place the new drier in position.
7) Braze all fittings while purging with nitrogen gas flowing at a pressure of 3 to 4 PSIG.

WARNING

Always protect the valve body by using a damp cloth to prevent the valve from overheating. Do not braze with the valve body exceeding 250°F (121°C).

8) Check for leaks using nitrogen gas (140 PSIG) and soap bubbles.
9) Evacuate the system, and charge it with refrigerant. For air-cooled and water-cooled models, see the nameplate for the required refrigerant charge. For remote air-cooled models, see the charge label in the machine compartment.
10) Attach the expansion valve bulb to the suction line in the same location as the previous bulb. The bulb should be at the 12 o'clock position on the tube. Be sure to secure the bulb with the clamp and holder and to insulate it.
11) Place the expansion valve cover in position.
12) Replace the panels in their correct positions.
13) Turn on the power supply.

F. Removal and Replacement of Hot Gas Valve and Line Valve

IMPORTANT

1. Always use a copper tube of the same diameter and length when replacing the hot gas lines; otherwise the performance may be reduced.
2. Always install a new drier every time the sealed refrigeration system is opened. Do not replace the drier until after all other repair or replacement has been made.
3. Always replace the strainer when replacing the hot gas valve.

1) Turn off the power supply.
2) Remove the panels.
3) Recover the refrigerant and store it in an approved container.
4) Remove the screw and the solenoid.
5) Disconnect the hot gas valve or line valve. Remove the strainer.
6) Place the new valve and strainer in position.
7) Remove the drier, then place the new drier in position.
8) Braze all fittings while purging with nitrogen gas flowing at a pressure of 3 to 4 PSIG.

CAUTION

Always protect the valve body by using a damp cloth to prevent the valve from overheating. Do not braze with the valve body exceeding 250°F (121°C).

9) Check for leaks using nitrogen gas (140 PSIG) and soap bubbles.
10) Evacuate the system, and charge it with refrigerant. For air-cooled and water-cooled models, see the nameplate for the required refrigerant charge. For remote air-cooled models, see the charge label in the machine compartment.
11) Cut the leads of the solenoid allowing enough lead length to reconnect using closed end connectors.
12) Connect the new solenoid leads.
13) Attach the solenoid to the valve body and secure it with a screw.
14) Replace the panels in their correct positions.
15) Turn on the power supply.

G. Removal and Replacement of Evaporator

IMPORTANT

Always install a new drier every time the sealed refrigeration system is opened. Do not replace the drier until after all other repairs or replacement have been made.

1) Turn off the power supply.
2) Remove the panels and the top insulation over the evaporator.
3) Recover the refrigerant and store it in an approved container.
4) Remove the spray tubes and the insulations at the "U" shaped notch where the refrigeration tubings pass through the molded chassis.
5) Disconnect the evaporator tubing.
6) Remove the pop rivets securing the evaporator, lift out the evaporator.
7) Install the new evaporator.
8) Remove the drier, then place the new drier in position.
9) Braze all fittings while purging with nitrogen gas flowing at a pressure of 3 to 4 PSIG.
10) Check for leaks using nitrogen gas (140 PSIG) and soap bubbles.
11) Evacuate the system, and charge it with refrigerant. For air-cooled and water-cooled models, see the nameplate for the required refrigerant charge. For remote air-cooled models, see the charge label in the machine compartment.
12) Replace the removed parts in the reverse order of which they were removed.
13) Replace the top insulation and the panels in their correct positions.
14) Turn on the power supply.

H. Removal and Replacement of Water Regulating Valve - Water Cooled Model Only

IMPORTANT

Always install a new drier every time the sealed refrigeration system is opened. Do not replace the drier until after all other repair or replacement has been made.

1) Turn off the power supply.
2) Close the water supply line shut-off valve.
3) Remove the panels.
4) Recover the refrigerant and store it in an approved container.
5) Disconnect the capillary tube at the condenser outlet.
6) Disconnect the flare-connections of the valve.

7) Remove the screws and the valve from the bracket.
8) Install the new valve.
9) Remove the drier, then place the new drier in position.
10) Braze all fittings while purging with nitrogen gas flowing at a pressure of 3 to 4 PSIG.
11) Check for leaks using nitrogen gas (140 PSIG) and soap bubbles.
12) Evacuate the system, and charge it with refrigerant. See the nameplate for the required refrigerant charge.
13) Connect the flare-connections.
14) Open the water supply line shut-off valve.
15) Check for water leaks.
16) Replace the panels in their correct positions.
17) Turn on the power supply.

I. Adjustment of Water Regulating Valve - Water-Cooled Model Only

The water regulating valve (also called "water regulator") is factory-adjusted. No adjustment is required under normal use. Adjust the water regulator, if necessary, using the following procedures.

1) Prepare a thermometer to check the condenser drain temperature. Attach a pressure gauge to the high-side line of the system.
2) Five minutes after a freeze cycle starts, confirm that the thermometer reads 104°F to 115°F (40°C to 46°C). If it does not, rotate the adjustment screw by using a flat blade screwdriver until the temperature is in the proper range. See Fig. 1. Next, check that the reference pressure is in the range indicated in the Head Pressure table in the Performance Data section. If it is not in the proper range, verify the refrigerant charge.
3) Check that the condenser drain temperature is stable.

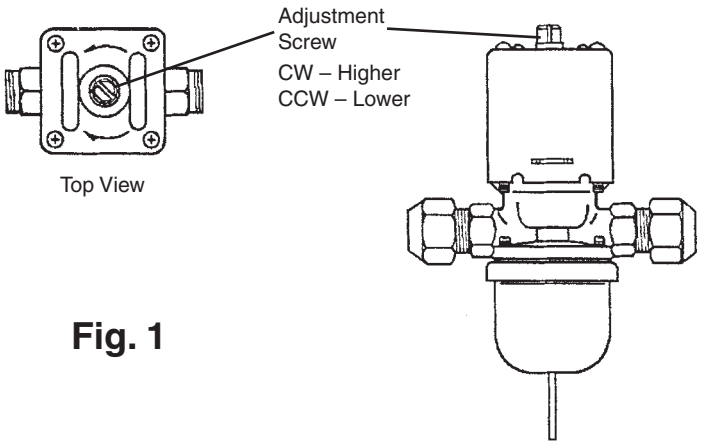

Fig. 1

J. Removal and Replacement of Headmaster (Condensing Pressure Regulator - C.P.R.) - Remote Air-Cooled Model Only

IMPORTANT

Always install a new drier every time the sealed refrigeration system is opened. Do not replace the drier until after all other repair or replacement has been made.

1) Turn off the power supply.
2) Remove the panels from the remote condenser unit.
3) Recover the refrigerant and store it in an approved container.
4) Before heating, break off the stub on the dome to release the dome charge.
5) Disconnect the headmaster.
6) Place the new headmaster in position.
7) Remove the drier, then place the new drier in position.
8) Braze all fittings with nitrogen gas flowing at a pressure of 3 to 4 PSIG.

CAUTION

Always protect the headmaster body by using a damp cloth to prevent it from overheating. Do not braze with the headmaster body exceeding 250°F (121°C).

9) Check for leaks using nitrogen gas (140 PSIG) and soap bubbles.
10) Evacuate the system and charge it with refrigerant. See the charge label in the machine compartment for the required refrigerant charge.
11) Replace the panels in their correct positions.
12) Turn on the power supply.

K. Removal and Replacement of Thermistor

IMPORTANT

1. Fragile, handle very carefully.
2. Always use a recommended sealant (High Thermal Conductive Type), Model KE4560RTV manufactured by SHINETSU SILICONE, Part Code 60Y000-11, or Part Code 4A0683-01 equivalent.
3. Always use a recommended foam insulation (Non-absorbent Type) or equivalent.
4. Do not shorten or cut the thermistor leads when installing.

1) Turn off the power supply.
2) Remove the panels.
3) Remove the control box cover.
4) Disconnect the thermistor leads from the K3 connector on the control board.
5) Remove the plastic cable ties, foam insulation, thermistor holder and thermistor. See Fig. 2.
6) Scrape away the old sealant on the thermistor holder and the suction pipe.
7) Wipe off moisture or condensation on the suction pipe.

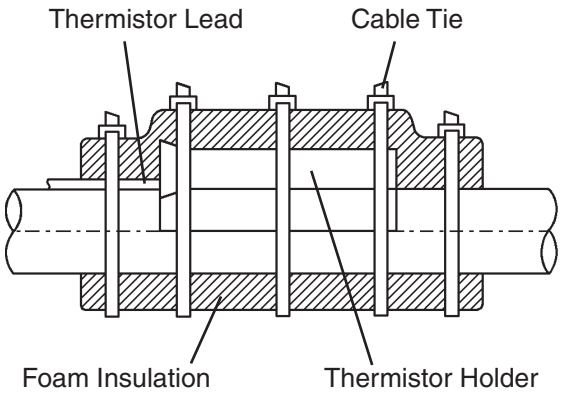

Fig. 2

8) Smoothly apply recommended sealant (KE4560RTV, Part Code 60Y000-11 or 4A0683-01) to the thermistor holder concave.
9) Attach the new thermistor to the suction pipe in the same position as the previous thermistor. Be very careful to prevent damage to the leads. Secure it using the thermistor holder and recommended foam insulation.
10) Secure the insulation using the plastic cable ties.
11) Connect the thermistor leads through the bushing of the control box to the K3 connector on the control board.
    Note: Do not cut the leads of the thermistor while installing it.
12) Replace the control box cover and the panels in their correct positions.
13) Turn on the power supply.

L. Removal and Replacement of Fan Motor

Note: When replacing a fan motor with defective winding, it is recommended that a new capacitor be installed.

1) Turn off the power supply.
2) Remove the panels.

3) Remove the junction box cover from the remote condenser unit (remote air-cooled model).
4) Remove the closed end connectors from the fan motor leads.
5) Remove the fan motor bracket and fan motor.
6) Install the new fan motor and replace the removed parts in the reverse order of which they were removed.
7) Replace the panels in their correct positions.
8) Replace the junction box cover in its correct position (remote air-cooled model).
9) Turn on the power supply.

M. Removal and Replacement of Inlet Water Valve

1) Turn off the power supply.
2) Close the water supply line shut-off valve.
3) Remove the front panel.
4) Remove the valve outlet tubing by releasing the clamp.
5) Loosen the fitting nut. Be careful not to lose the washer.
6) Disconnect the terminals from the water valve.
7) Remove bracket and valve from the unit.
8) Remove the valve from the bracket. Attach new valve to the bracket, then install the valve.
9) Replace the removed parts in the reverse order of which they were removed. Make sure the washer is in place in the fitting nut.
10) Open the water supply line shut-off valve.
11) Turn on the power supply.
12) Check for leaks.
13) Replace the front panel in its correct position.

N. Removal and Replacement of Pump Motor

1) Turn off the power supply.
2) Remove the front panel.
3) Remove the base cover.
4) Drain the water tank by removing one end of the pump tubing. See Fig. 3.
5) Replace the removed parts in their correct positions.
6) Disconnect the pump suction and discharge hoses.
7) Remove the closed end connectors from the pump motor leads.
8) Remove the screw attaching the pump motor assembly to the base, then remove the pump motor assembly.

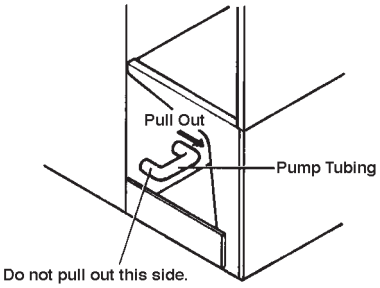

Fig. 3

9) Remove the screw attaching the pump motor to the pump motor bracket.
10) Remove the screws attaching the pump housing to the pump motor. Remove the housing and check the impeller.
11) If the impeller is defective, install a new impeller.
12) Install the new motor or new parts, and replace the removed parts in the reverse order of which they were removed.
13) Turn on the power supply and check for leaks.
14) Replace the base cover in its correct position.
15) Replace the front panel in its correct position.

O. Removal and Replacement of Spray Tubes

1) Turn off the power supply.
2) Remove the front panel and the insulation panel.
3) Remove the rubber hoses from the spray tubes (water supply pipe).
4) Release the clamps and disconnect the rubber hoses.
5) Remove the spray tubes.
6) Install the new spray tubes, and replace the removed parts in the reverse order of which they were removed.
7) Replace the panels in their correct positions.
8) Turn on the power supply.

VI. Cleaning and Maintenance Instructions

IMPORTANT

Ensure all components, fasteners and thumbscrews are securely in place after any maintenance or cleaning is done to the equipment.

A. Cleaning and Sanitizing Procedures

WARNING

1. HOSHIZAKI recommends cleaning this unit at least once a year. More frequent cleaning, however, may be required in some existing water conditions.
2. To prevent injury to individuals and damage to the icemaker, do not use ammonia type cleaners.
3. Always wear liquid-proof gloves to prevent the cleaning and sanitizing solutions from coming into contact with skin.

IMPORTANT

1. The cleaning valve is used to allow solution flow to the inside of the evaporator during the cleaning and sanitizing operation. It should be closed for all icemaking operation. The compressor will not operate unless this valve is completely closed.
2. To open the cleaning valve, the valve handle should be parallel to the valve body. To close the valve, the valve handle should be at a right angle to the valve body.

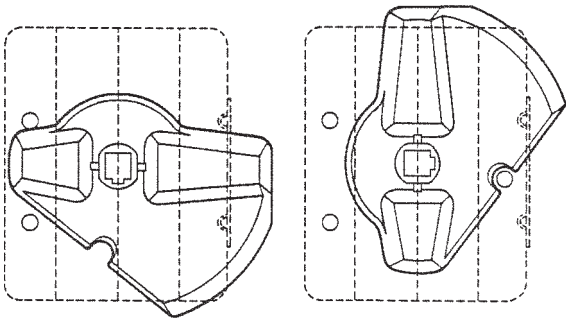

Closed Position Open Position

1. Cleaning Procedure

1) Dilute approximately 16 fl. oz. of Hoshizaki "Scale Away" with 3 gal. (11 l) of water.
2) Remove all ice from the evaporator and the storage bin.
   Note: To remove cubes on the evaporator, turn off the power supply and turn it on after 3 minutes. The harvest cycle starts and the cubes will be removed from the evaporator.
3) Turn off the power supply.
4) Remove the front panel and the base cover, and then remove the insulation panel by lifting up the panel slightly and pulling it towards you.
5) Remove one end of the pump tubing (see Fig. 4). Drain the water tank. Replace the pump tubing in its correct position.

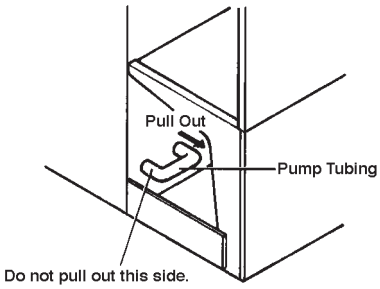

Fig. 4

6) In bad or severe water conditions, clean the float switch assembly as described below. Otherwise, continue to step 7.
   a. Remove the float switch assembly from the mounting bracket and remove the rubber boot from the bottom of the assembly.
   b. Remove the retainer rod from the bottom of the float switch assembly, then remove the float. Be careful not to bend the retainer rod excessively when removing it.
   c. Wipe down the float switch assembly's housing, shaft, float, and retainer rod with cleaning solution. Wipe the inside of the rubber boot with cleaning solution.
   d. Reassemble the float switch assembly and replace it and the rubber boot in their correct positions.
7) Pour the cleaning solution into the water tank.
8) Fully open the cleaning valve on the left side wall of the machine compartment.
9) Move the control switch on the control box to the "WASH" position.
10) Replace the insulation panel and the front panel in their correct positions.
11) Turn on the power supply and start the washing process.
12) Turn off the power supply after 30 minutes.
13) Remove the front panel.
14) Remove one end of the pump tubing. Drain the water tank. Replace the pump tubing in its correct position.
15) Move the control switch to the "ICE" position.
16) Close the cleaning valve.
    Note: The icemaker will not operate unless the cleaning valve is completely closed.
17) Replace the front panel in its correct position.
18) Turn on the power supply to fill the water tank with water.
19) Turn off the power supply after 3 minutes.

20) Remove the front panel and fully open the cleaning valve.

21) Move the control switch to the "WASH" position.

22) Replace the front panel in its correct position.

23) Turn on the power supply to rinse off the cleaning solution.

24) Turn off the power supply after 5 minutes.

25) Remove the front panel.

26) Remove one end of the pump tubing. Drain the water tank. Replace the pump tubing in its correct position.

27) Repeat steps 15 through 26 three more times to rinse thoroughly.
Note: If you do not sanitize the icemaker, go to step 10 in "2. Sanitizing Procedure."

2. Sanitizing Procedure - Following Cleaning Procedure

1) Dilute a 5.25% sodium hypochlorite solution (chlorine bleach) with water (add 1.5 fl. oz. of sanitizer to 3 gal. of water).

2) Remove the insulation panel.

3) Pour the sanitizing solution into the water tank.

4) Replace the insulation panel and the front panel in their correct positions.
Note: Make sure that the control switch is in the "WASH" position and the cleaning valve is open.

5) Turn on the power supply, and start the sanitizing process.

6) Turn off the power supply after 15 minutes.

7) Remove the front panel.

8) Remove one end of the pump tubing. Drain the water tank. Replace the pump tubing in its correct position.

9) Repeat steps 15 through 26 in "1. Cleaning Procedure" two times to rinse thoroughly.

10) Close the cleaning valve.

11) Move the control switch to the "ICE" position.

12) Replace the front panel and the base cover in their correct positions.

13) Clean the storage bin with water.

14) Turn on the power supply, and start the automatic icemaking process.

B. Maintenance

IMPORTANT

This icemaker must be maintained individually, referring to the instruction manual and labels provided with the icemaker.

1. Stainless Steel Exterior

To prevent corrosion, wipe the exterior occasionally with a clean and soft cloth. Use a

damp cloth containing a neutral cleaner to wipe off oil or dirt build up.

2. Storage Bin and Scoop

- Wash your hands before removing ice. Use the plastic scoop provided (bin accessory).
- The storage bin is for ice use only. Do not store anything else in the bin.
- Keep the scoop clean. Clean it by using a neutral cleaner and rinse thoroughly.
- Clean the bin liner by using a neutral cleaner. Rinse thoroughly after cleaning.

3. Air Filters (air-cooled models only)

The plastic mesh air filters located behind the louvers remove dirt or dust from the air, and keep the condenser from getting clogged. As the filters get clogged, the icemaker's performance will be reduced. Check the filters at least twice a month. When they are clogged, use warm water and a neutral cleaner to wash the filters.

4. Condenser (air-cooled and remote air-cooled models only)

Check the condenser once a year, and clean if required by using a brush or vacuum cleaner. More frequent cleaning may be required depending on the location of the icemaker or condenser unit.

C. Preparing the Icemaker for Long Storage

WARNING

When shutting off the icemaker for an extended time, drain out all water from the water tank and remove the ice from the storage bin. The storage bin should be cleaned and dried. Drain the icemaker to prevent damage to the water supply line at subfreezing temperatures, using air or carbon dioxide. Shut off the icemaker until the proper ambient temperature is resumed.

When the icemaker is not used for two or three days, it is sufficient to only move the control switch to the "OFF" position, unless the icemaker will be at subfreezing temperatures.

1. On water-cooled model only, first remove the water from the water-cooled condenser:

1) Remove the front panel.
2) Move the control switch on the control box to the "OFF" position.
3) Wait 3 minutes.
4) Move the control switch to the "ICE" position.
5) Allow 5 minutes for the icemaker to fill with water and the water pump to start operating.
6) Close the water-cooled condenser water supply line shut-off valve.
7) Open the drain valve for the water-cooled condenser water supply line.
8) Allow the line to drain by gravity.
9) Quickly attach compressed air or carbon dioxide supply to the condenser water line drain valve.

10) Blow the water-cooled condenser out, using compressed air or carbon dioxide until water stops coming out.

2. Drain the potable water supply line:

1) Remove the front panel.
2) Move the control switch on the control box to the "OFF" position.
3) Wait 3 minutes.
4) Close the potable water supply line shut-off valve and open the potable water supply line drain valve.
5) Allow the line to drain by gravity.
6) Attach compressed air or carbon dioxide supply to the potable water line drain valve.
7) Move the control switch to the "ICE" position.
8) Blow the potable water line out using compressed air or carbon dioxide.

3. Drain the potable water tank:

1) Turn off the power supply.
2) Move the control switch to the "OFF" position.
3) Remove the front panel and the base cover, and then remove the insulation panel by lifting up the panel slightly and pulling it towards you.
5) Remove one end of the pump tubing (see Fig. 5). Drain the water tank. Replace the pump tubing in its correct position.
5) Remove all ice from the storage bin, and clean the storage bin.
7) Replace the front panel in its correct position.
8) Close the drain valve.

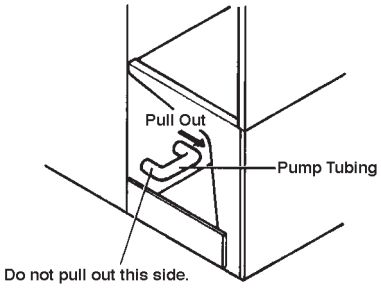

Fig. 5