Hoshizaki America, Inc.

Modular Crescent Cuber

Models
KM-515MAH
KM-515MWH
KM-515MRH

"A Superior Degree of Reliability"

www.hoshizaki.com

SERVICE MANUAL

Number: 73157
Issued: 2-1-2008

IMPORTANT

Only qualified service technicians should attempt to install, service, or maintain this icemaker. No service or maintenance should be undertaken until the technician has thoroughly read this Service Manual. Failure to service and maintain the equipment in accordance with this manual may adversely affect safety, performance, and warranty coverage.

HOSHIZAKI provides this manual primarily to assist qualified service technicians in the service and maintenance of the icemaker.

Should the reader have any questions or concerns which have not been satisfactorily addressed, please call, write, or send an e-mail message to the HOSHIZAKI Technical Support Department for assistance.

HOSHIZAKI AMERICA, INC.
618 Highway 74 South
Peachtree City, GA 30269

Attn: HOSHIZAKI Technical Support Department

Phone: 1-800-233-1940 Technical Service
(770) 487-2331
Fax: 1-800-843-1056
(770) 487-3360
E-mail: techsupport@hoshizaki.com

Web Site: www.hoshizaki.com

NOTE: To expedite assistance, all correspondence/communication MUST include the following information:

- Model Number _____
- Serial Number _____
- Complete and detailed explanation of the problem.

IMPORTANT

This manual should be read carefully before the icemaker is serviced or maintenance operations are performed. Only qualified service technicians should install, service, and maintain the icemaker. Read the warnings contained in this booklet carefully as they give important information regarding safety. Please retain this booklet for any further reference that may be necessary.

CONTENTS

I. Specifications 5
A. Icemaker 5
1. KM-515MAH (air-cooled) 5
2. KM-515MWH (water-cooled) 6
3. KM-515MRH (remote air-cooled) 7
B. Condenser Unit 8
1. URC-5F 8
II. General Information 10
A. Construction 10
1. KM-515MAH (air-cooled) 10
2. KM-515MWH (water-cooled) 11
3. KM-515MRH (remote air-cooled) 12
B. Sequence of Operation 13
1. One Minute Fill Cycle 13
2. Initial Harvest Cycle 13
3. Freeze Cycle 13
4. Pump-Out Cycle 13
5. Normal Harvest Cycle 14
C. Control Board 16
1. Control Board Layout 17
2. Features 18
a) Maximum Water Supply Period – Six minutes 18
b) Harvest Backup Timer and Freeze Timer 18
c) High Temperature Safety 18
d) Low Water Safety 18
e) High Voltage and Low Voltage Cut-outs 18
f) LED Lights and Audible Alarm Safeties 19
3. Controls and Adjustments 20
a) Default S4 Dip Switch Settings 20
b) Harvest Timer (S4 dip switch 1 & 2) 20
c) Pump-Out Timer (S4 dip switch 3 & 4) 21
d) Pump-Out Frequency Control (S4 dip switch 5 & 6) 22
e) Factory Use (S4 Dip Switch 7 & 8) 22
f) Freeze Timer (S4 dip switch 9 & 10) 22
4. Control Board Check Procedure 23
5. Control Board Replacement 23
D. Harvest Control – Thermistor 24
E. Bin Control 24

III. Technical Information 25
A. Water Circuit and Refrigeration Circuit 25
1. KM-515MAH (air-cooled) 25
2. KM-515MWH (water-cooled) 26
3. KM-515MRH (remote air-cooled) 27
B. Wiring Diagrams 28
1. KM-515MAH (air-cooled) and KM-515MWH (water-cooled) 28
2. KM-515MRH (remote air-cooled) 29
C. Performance Data 30
1. KM-515MAH (air-cooled) 30
2. KM-515MWH (water-cooled) 31
3. KM-515MRH (remote air-cooled) 32
IV. Service Diagnosis 33
A. 10-Minute KM Diagnostic Procedure 33
B. Diagnostic Charts 35
1. No Ice Production 35
2. Evaporator is Frozen Up 38
3. Low Ice Production 40
4. Abnormal Ice 40
5. Other 41
V. Removal and Replacement of Components 42
A. Service for Refrigerant Lines 42
1. Refrigerant Recovery 42
2. Brazing 42
3. Evacuation and Recharge (R-404A) 43
B. Removal and Replacement of Compressor 44
C. Removal and Replacement of Expansion Valve 45
D. Removal and Replacement of Hot Gas Valve or Line Valve 46
E. Removal and Replacement of Evaporator 47
F. Removal and Replacement of Water Regulating Valve -Water-Cooled Model Only 47
G. Adjustment of Water Regulating Valve - Water-Cooled Model Only 48
H. Removal and Replacement of Headmaster (Condensing Pressure Regulator - C.P.R.) - Remote Air-Cooled Model Only 49
I. Removal and Replacement of Thermistor 50
J. Removal and Replacement of Fan Motor 51
K. Removal and Replacement of Inlet Water Valve 51
L. Removal and Replacement of Pump Motor 52
VI. Cleaning and Maintenance 53
A. Cleaning and Sanitizing Instructions 53
1. Cleaning Procedure 54
2. Sanitizing Procedure - Following Cleaning Procedure 55
B. Maintenance 56
C. Preparing the Icemaker for Long Storage 56

I. Specifications

A. Icemaker

1. KM-515MAH (air-cooled)

AC SUPPLY VOLTAGE	115/60/1
AMPERAGE	11.7 A (5 Min. Freeze AT 104°F / WT 80°F)
MINIMUM CIRCUIT AMPACITY	20 A
MAXIMUM FUSE SIZE	20 A

APPROXIMATE ICE PRODUCTION PER 24 HR.
lbs./day (kg/day)
Reference without *marks

Ambient Temp.(°F)	WATER TEMP. (°F) 50	70	90
70	*501 (227)	482 (218)	447 (203)
80	486 (221)	456 (207)	416 (189)
90	482 (218)	*435 (197)	396 (180)
100	472 (214)	426 (193)	361 (164)

SHAPE OF ICE	Crescent Cube	
ICE PRODUCTION PER CYCLE	10.2 lbs. (4.6 kg) 480pcs.	
APPROXIMATE STORAGE CAPACITY	N/A	
ELECTRIC & WATER CONSUMPTION	90/70°F	70/50°F
ELECTRIC W (kWH/100 lbs.)	1090(6.0)	980(4.7)
WATER gal./24HR (gal./100 lbs.)	99(22.8)	188(37.6)
EXTERIOR DIMENSIONS (WxDxH)	22" x 27-3/8" x 30-5/16" (560 x 695 x 770 mm)	
EXTERIOR FINISH	Stainless Steel, Galvanized Steel (Rear)	
WEIGHT	Net 151 lbs. (68 kg), Shipping 175 lbs. (79 kg)	
CONNECTIONS - ELECTRIC	Permanent - Connection	
- WATER SUPPLY	Inlet	1/2" FPT
- DRAIN	Outlet	3/4" FPT
		3/8" OD Tube
CUBE CONTROL SYSTEM	Float Switch	
HARVESTING CONTROL SYSTEM	Hot Gas and Water, Thermistor and Timer	
ICE MAKING WATER CONTROL	Timer Controlled. Overflow Pipe	
COOLING WATER CONTROL	N/A	
BIN CONTROL SYSTEM	Thermostat	
COMPRESSOR	Hermetic, Model RST55C1E-CAA-202	
CONDENSER	Air-Cooled , Fin and tube type	
EVAPORATOR	Vertical type, Stainless Steel and Copper	
REFRIGERANT CONTROL	Thermostatic Expansion Valve	
REFRIGERANT CHARGE	R404A, 1 lb. 7.3 oz. (660g)	
DESIGN PRESSURE	High 467PSIG, Low 206PSIG	
P.C. BOARD CIRCUIT PROTECTION	High Voltage Cut-out (Internal)	
COMPRESSOR PROTECTION	Auto-reset Overload Protector (Internal)	
REFRIGERANT CIRCUIT PROTECTION	Auto-reset High Pressure Control Switch	
LOW WATER PROTECTION	Float Switch	
ACCESSORIES -SUPPLIED	N/A	
-REQUIRED	Ice Dispenser or Ice Storage Bin	
OPERATING CONDITIONS	VOLTAGE RANGE	104 - 127 V
	AMBIENT TEMP.	45 -100° F
	WATER SUPPLY TEMP.	45 - 90° F
	WATER SUPPLY PRESSURE	10 - 113 PSIG

Note: We reserve the right to make changes in specifications and design without prior notice.

2. KM-515MWH (water-cooled)

AC SUPPLY VOLTAGE	115/60/1
AMPERAGE	9.6 A (5 Min. Freeze AT 104°F / WT 80°F)
MINIMUM CIRCUIT AMPACITY	20 A
MAXIMUM FUSE SIZE	20 A

APPROXIMATE ICE PRODUCTION PER 24 HR.
lbs./day (kg/day)
Reference without *marks

Ambient Temp.(°F)	WATER TEMP. (°F) 50	70	90
70	*500 (227)	493 (223)	465 (211)
80	494 (224)	483 (219)	445 (202)
90	493 (223)	*475 (215)	441 (200)
100	481 (218)	467 (212)	409 (186)

SHAPE OF ICE	Crescent Cube
ICE PRODUCTION PER CYCLE	10.3 lbs. (4.7 kg) 480pcs.
APPROXIMATE STORAGE CAPACITY	N/A

ELECTRIC & WATER CONSUMPTION	90/70°F	70/50°F
ELECTRIC W (kWH/100 lbs.)	950(4.8)	940(4.5)
WATER gal./24HR (gal./100 lbs.)	102(21.5)	163(32.5)
WATER COOLED CONDENSER gal./24HR (gal./100 lbs.)	546(115)	352(70)

EXTERIOR DIMENSIONS (WxDxH)	22" x 27-3/8" x 30-5/16" (560 x 695 x 770 mm)			
EXTERIOR FINISH	Stainless Steel, Galvanized Steel (Rear)			
WEIGHT	Net 151 lbs. (68 kg), Shipping 175 lbs. (79 kg)			
CONNECTIONS - ELECTRIC	Permanent - Connection			
- WATER SUPPLY	Inlet	1/2" FPT	Cond. Inlet	1/2" FPT
- DRAIN	Outlet	3/4" FPT	Cond. Outlet	3/8" FPT
		3/8" OD Tube		

CUBE CONTROL SYSTEM	Float Switch
HARVESTING CONTROL SYSTEM	Hot Gas and Water, Thermistor and Timer
ICE MAKING WATER CONTROL	Timer Controlled. Overflow Pipe
COOLING WATER CONTROL	Pressure Regulator
BIN CONTROL SYSTEM	Thermostat
COMPRESSOR	Hermetic, Model RST55C1E-CAA-202
CONDENSER	Water-cooled, Tube in tube type
EVAPORATOR	Vertical type, Stainless Steel and Copper
REFRIGERANT CONTROL	Thermostatic Expansion Valve
REFRIGERANT CHARGE	R404A, 0 lb. 14.8 oz. (420g)
DESIGN PRESSURE	High 427PSIG, Low 206PSIG
P.C. BOARD CIRCUIT PROTECTION	High Voltage Cut-out (Internal)
COMPRESSOR PROTECTION	Auto-reset Overload Protector (Internal)
REFRIGERANT CIRCUIT PROTECTION	Auto-reset High Pressure Control Switch
LOW WATER PROTECTION	Float Switch
ACCESSORIES -SUPPLIED	N/A
-REQUIRED	Ice Dispenser or Ice Storage Bin

OPERATING CONDITIONS	VOLTAGE RANGE	104 - 127 V
	AMBIENT TEMP.	45 -100° F
	WATER SUPPLY TEMP.	45 - 90° F
	WATER SUPPLY PRESSURE	10 - 113 PSIG

Note: We reserve the right to make changes in specifications and design without prior notice.

3. KM-515MRH (remote air-cooled)

AC SUPPLY VOLTAGE	115/60/1
AMPERAGE	11.3A (5 Min. Freeze AT 104°F / WT 80°F)
MINIMUM CIRCUIT AMPACITY	20 A
MAXIMUM FUSE SIZE	20 A

APPROXIMATE ICE PRODUCTION PER 24 HR.
lbs./day (kg/day)
Reference without *marks

Ambient Temp.(°F)	WATER TEMP. (°F) 50	70	90
70	*491 (223)	480 (218)	443 (201)
80	482 (219)	465 (211)	417 (189)
90	480 (218)	*452 (205)	408 (185)
100	465 (211)	442 (200)	368 (167)

SHAPE OF ICE	Crescent Cube	
ICE PRODUCTION PER CYCLE	10.3 lbs. (4.7 kg) 480pcs.	
APPROXIMATE STORAGE CAPACITY	N/A	
ELECTRIC & WATER CONSUMPTION	90/70°F	70/50°F
ELECTRIC W (kWH/100 lbs.)	1090(5.8)	1000(4.9)
WATER gal./24HR (gal./100 lbs.)	94(20.8)	198(40.4)
EXTERIOR DIMENSIONS (WxDxH)	22" x 27-3/8" x 30-5/16" (560 x 695 x 770 mm)	
EXTERIOR FINISH	Stainless Steel, Galvanized Steel (Rear)	
WEIGHT	Net 151 lbs. (68 kg), Shipping 175 lbs. (79 kg)	
CONNECTIONS - ELECTRIC	Permanent - Connection	
- WATER SUPPLY	Inlet	1/2" FPT
- DRAIN	Outlet	3/4" FPT
		3/8" OD Tube
CUBE CONTROL SYSTEM	Float Switch	
HARVESTING CONTROL SYSTEM	Hot Gas and Water, Thermistor and Timer	
ICE MAKING WATER CONTROL	Timer Controlled. Overflow Pipe	
COOLING WATER CONTROL	N/A	
BIN CONTROL SYSTEM	Thermostat	
COMPRESSOR	Hermetic, Model RST55C1E-CAA-202	
CONDENSER	Air-Cooled Remote, Condenser Unit URC-5F	
EVAPORATOR	Vertical type, Stainless Steel and Copper	
REFRIGERANT CONTROL	Thermostatic Expansion Valve	
	Condensing Pressure Regulator on URC-5F	
REFRIGERANT CHARGE	R404A, 4 lbs. 4.8 oz. (1950g)	
	(Icemaker 2 lbs. 6.8 oz. Cond. Unit 1 lbs. 14 oz.)	
DESIGN PRESSURE	High 467PSIG, Low 206PSIG	
P.C. BOARD CIRCUIT PROTECTION	High Voltage Cut-out (Internal)	
COMPRESSOR PROTECTION	Auto-reset Overload Protector (Internal)	
REFRIGERANT CIRCUIT PROTECTION	Auto-reset High Pressure Control Switch	
LOW WATER PROTECTION	Float Switch	
ACCESSORIES -SUPPLIED	N/A	
-REQUIRED	Ice Dispenser or Ice Storage Bin, Remote Condenser Unit	
OPERATING CONDITIONS	VOLTAGE RANGE	104 - 127 V
	AMBIENT TEMP.	45 -100° F
	WATER SUPPLY TEMP.	45 - 90° F
	WATER SUPPLY PRESSURE	10 - 113 PSIG

Note: We reserve the right to make changes in specifications and design without prior notice.

B. Condenser Unit

1. URC-5F

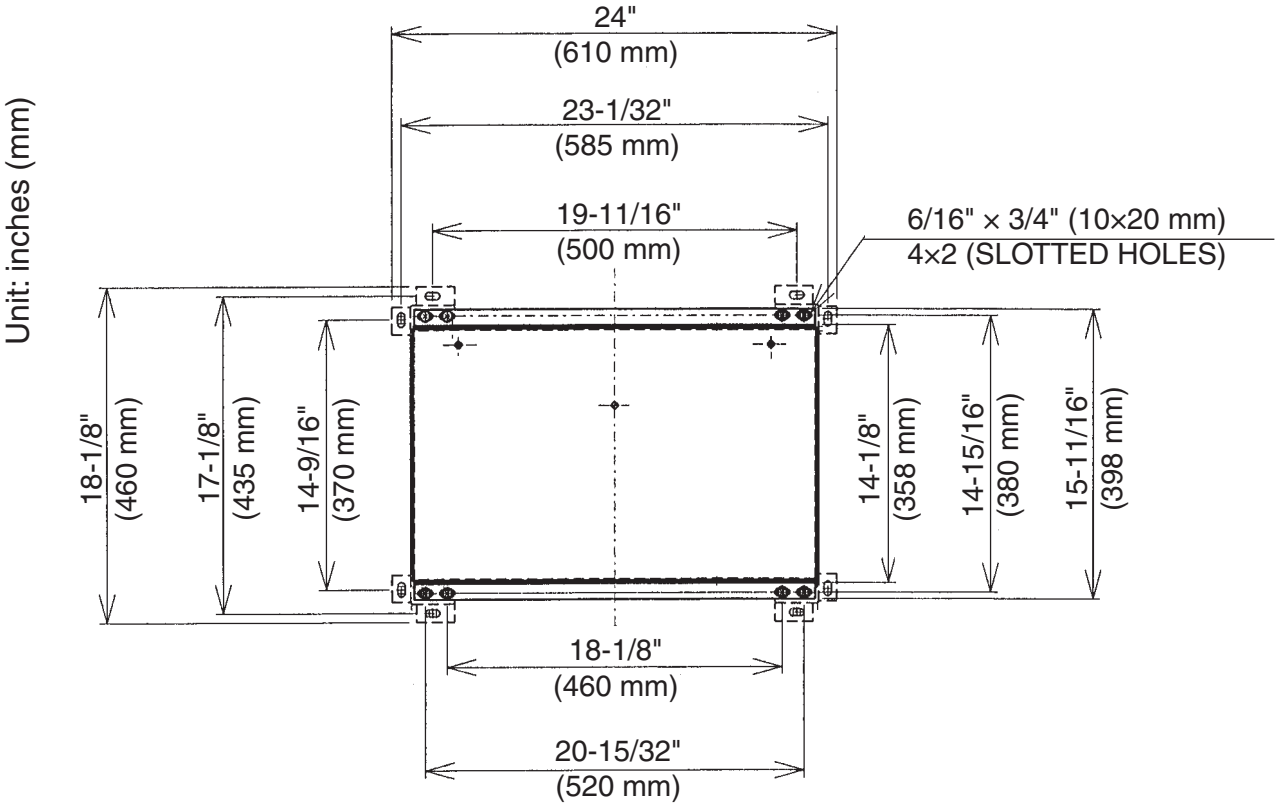

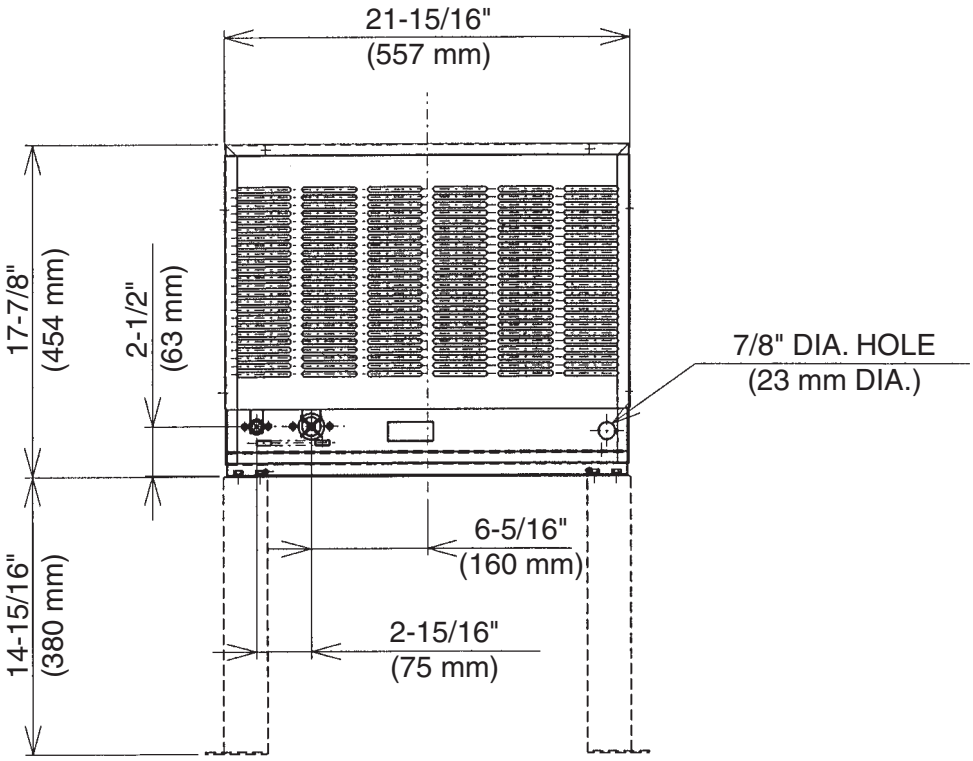

Specifications

MODEL: URC-5F

AC SUPPLY VOLTAGE	115/60/1 (Connection to Icemaker)		
FAN MOTOR	115 V	Total 1.3FLA	65W
EXTERIOR DIMENSIONS (WxDxH)	21-15/16" x 15-11/16" x 17-7/8" (557 x 398 x 454 mm)		
DIMENSIONS INCLUDING LEGS (WxDxH)	24" x 18-1/8" x 32-13/16" (610 x 460 x 834 mm)		
EXTERIOR FINISH	Galvanized Steel		
WEIGHT	Net 61 lbs. (28 kg)	Shipping 68 lbs. (31 kg)	
CONNECTIONS - ELECTRIC	Permanent - Connection		
- REFRIGERANT	Discharge Line 1-1/16"-12 UNF Fitting (#10 AEROQUIP)		
	Liquid Line	5/8"-18 UNF Fitting (#6 AEROQUIP)	
CONDENSER	Air-cooled, Fin and tube type		
FAN MOTOR PROTECTION	Thermal Protection		
REFRIGERANT CONTROL	Condensing Pressure Regulator		
REFRIGERANT CHARGE	R-404A	1 lb. 14 oz.	(850g)
DESIGN PRESSURE	High 467 PSIG		
OPERATING CONDITIONS	VOLTAGE RANGE	104 ~ 127 V	
	AMBIENT TEMP.	-20 ~ 122 °F	
ACCESSORIES -SUPPLIED	Leg		2 pcs
	Hex. Head Bolt w/Washer	8 x 16	8 pcs
	Hex. Nut	8	8 pcs

Note: We reserve the right to make changes in specifications and design without prior notice.

II. General Information

A. Construction

1. KM-515MAH (air-cooled)

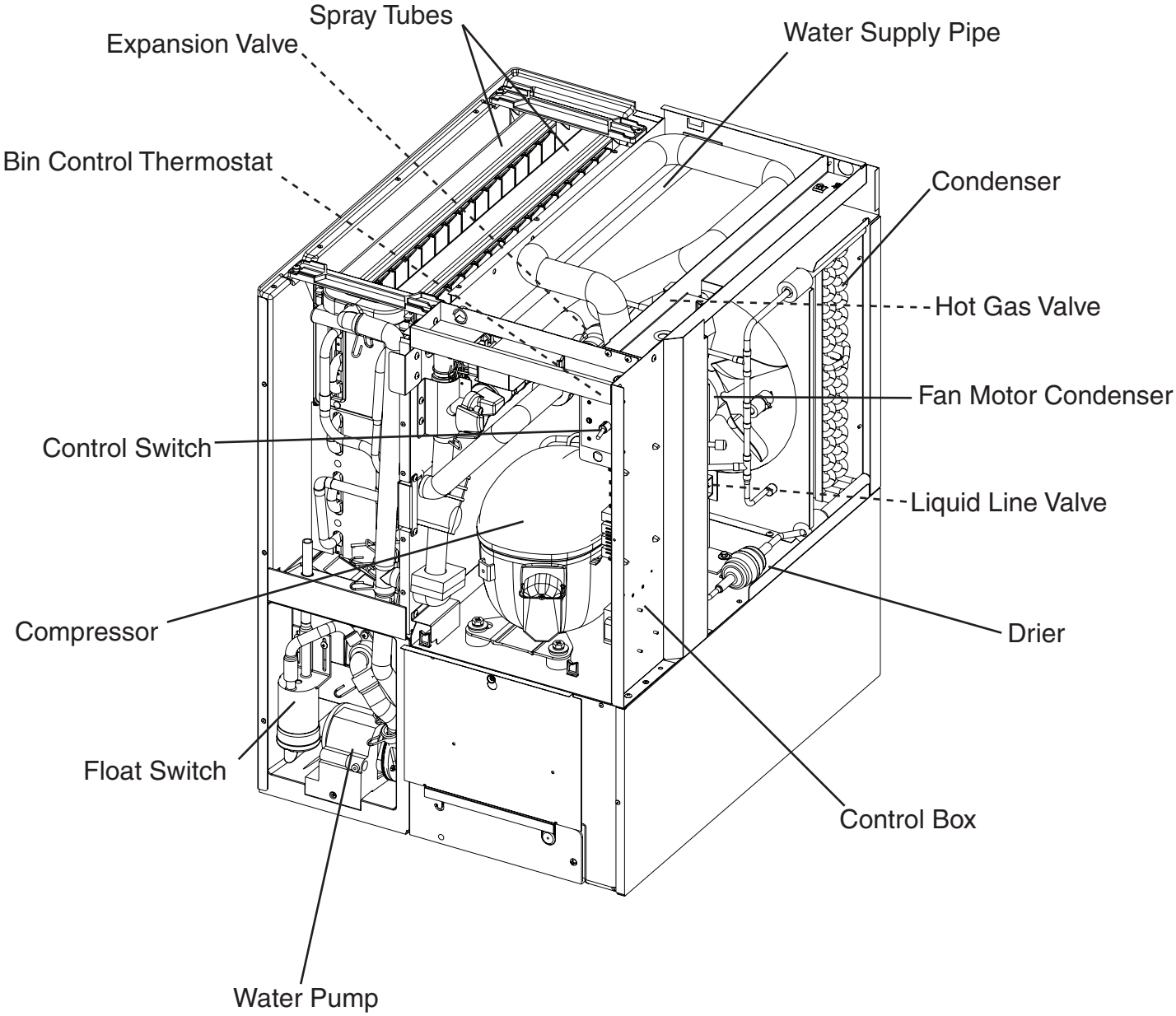

2. KM-515MWH (water-cooled)

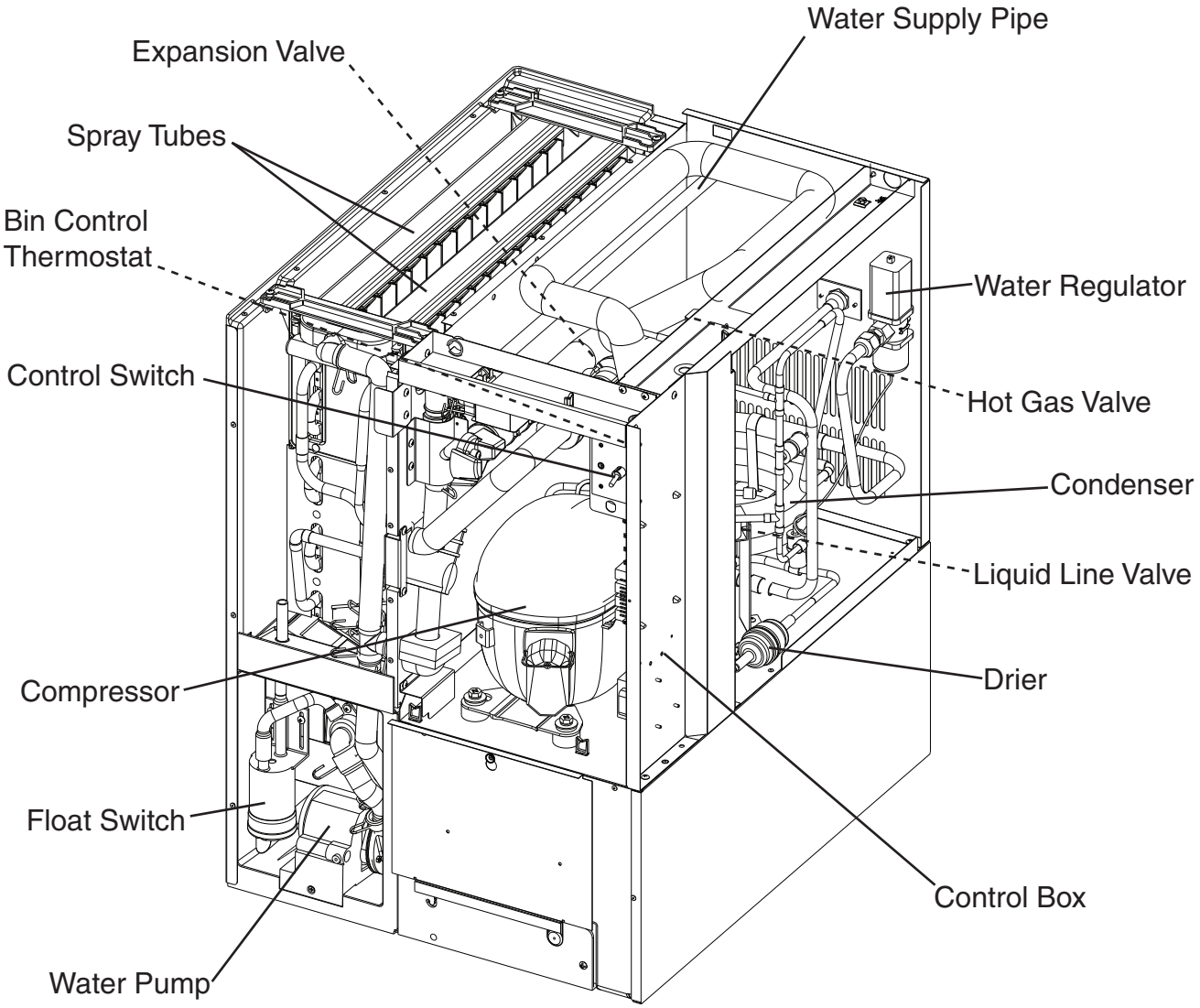

3. KM-515MRH (remote air-cooled)

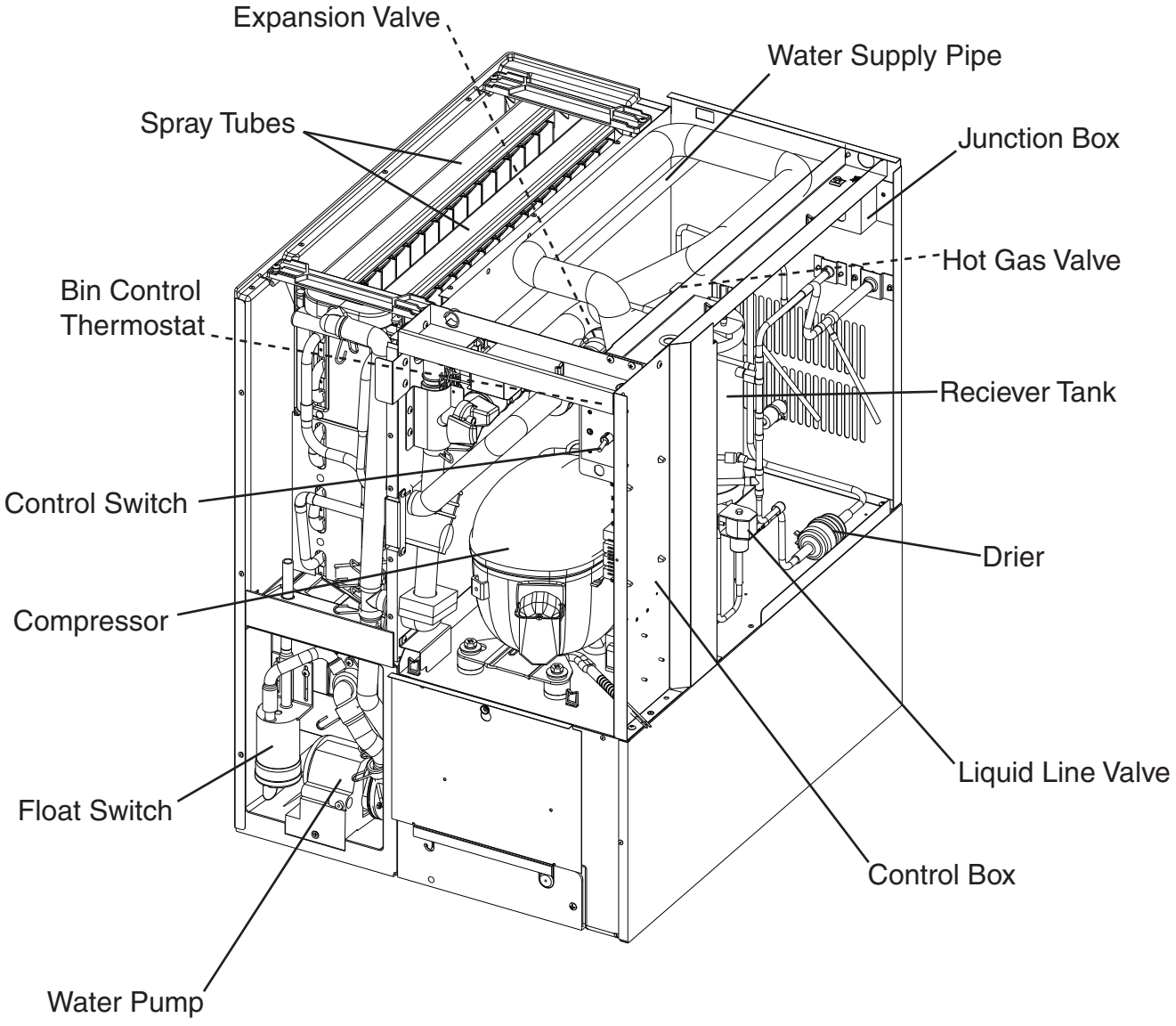

B. Sequence of Operation

The steps in the sequence are as outlined below. When power is supplied, the red "POWER OK" LED on the control board comes on. A 5-second delay occurs at startup. Note that the order of the LEDs from the outer edge of the board is 1, 4, 3, 2.

1. One Minute Fill Cycle

LED 4 is on. WV opens and the fill period begins. After 1 minute, the board checks for a closed F/S. If F/S is closed, the harvest cycle begins. If not, WV will remain energized through additional 1 minute cycles until water enters the sump and F/S closes. This serves as a low water safety to protect the water pump.

2. Initial Harvest Cycle

LEDs 1, 4, and 2 are on. WV remains open, Comp, FMR, HGV energize. The control board monitors the warming of the evaporator via the thermistor located on the suction line. When the thermistor reaches 48°F (9°C), the control board reads a 3.9 kΩ signal from the thermistor and turns harvest termination over to the adjustable harvest timer which is factory set for normal conditions. The timer has settings of 60, 90, 120, and 180 seconds (S4 dip switch 1 & 2). For details, see "II.C.3.b) Harvest Timer." When the harvest timer completes its countdown, the harvest cycle is complete and the freeze cycle starts. The minimum total time allowed by the control board for a complete harvest cycle is 2 minutes. WV is energized during harvest for a maximum of 6 minutes or the length of harvest, whichever is shorter. At the end of harvest, the control board checks the position of F/S and proceeds to the freeze cycle if it is closed or calls for a 1-minute fill if it is open.

3. Freeze Cycle

LED 1 is on. Comp and FMR continue to run, PM and FMS energize, LLV opens, HGV and WV close, and the freeze cycle starts. For the first 5 minutes the control board will not accept a signal from F/S. This 5 minute minimum freeze acts as a short cycle protection. At the end of 5 minutes, F/S assumes control. As ice builds on the evaporator the water level in the sump lowers. The freeze continues until F/S opens and terminates ice production.

4. Pump-Out Cycle

LEDs 1, 3, and 2 are on. Comp and FMR continue to run, HGV opens, LLV closes, and FMS de-energizes. PM stops for 2 seconds and reverses, taking water from the bottom of the sump and forcing pressure against the check valve seat allowing water to go through the check valve and down the drain. At the same time, water flows through the small tube to power flush the F/S. When the pump-out timer (S4 dip switch 3 & 4) stops counting, the pump out is complete. The pump-out frequency control (S4 dip switch 5 & 6) is factory-adjusted to drain the water tank every cycle, and no adjustment should be made.

5. Normal Harvest Cycle

LEDs 1, 4, and 2 are on. Comp, FMR, and HGV remain energized. PM stops and WV energizes. The control board monitors the warming of the evaporator via the thermistor located on the suction line. When the thermistor reaches 48°F (9°C), the control board reads a 3.9 kΩ signal from the thermistor and turns harvest termination over to the pump-out timer's harvest timer which is factory set for normal conditions. For details, see "II.C.3.c) Pump-Out Timer." When the pump-out timer's harvest timer completes its countdown, the harvest cycle is complete and the freeze cycle starts. The minimum total time allowed by the control board for a complete harvest cycle is 2 minutes. WV is energized during harvest for a maximum of 6 minutes or the length of harvest, whichever is shorter. At the end of harvest, the control board checks the position of F/S and proceeds to the freeze cycle if it is closed or calls for a 1-minute fill if it is open.

Legend: **Comp**–compressor; **FMR**–remote fan motor; **FMS**–self-contained fan motor; **F/S**–float switch; **HGV**–hot gas valve; **LLV**–liquid line valve; **PM**–pump motor; **WV**–inlet water valve

KM-515MAH, KM-515MWH, KM-515MRH Sequence Flow Chart and Component Operation

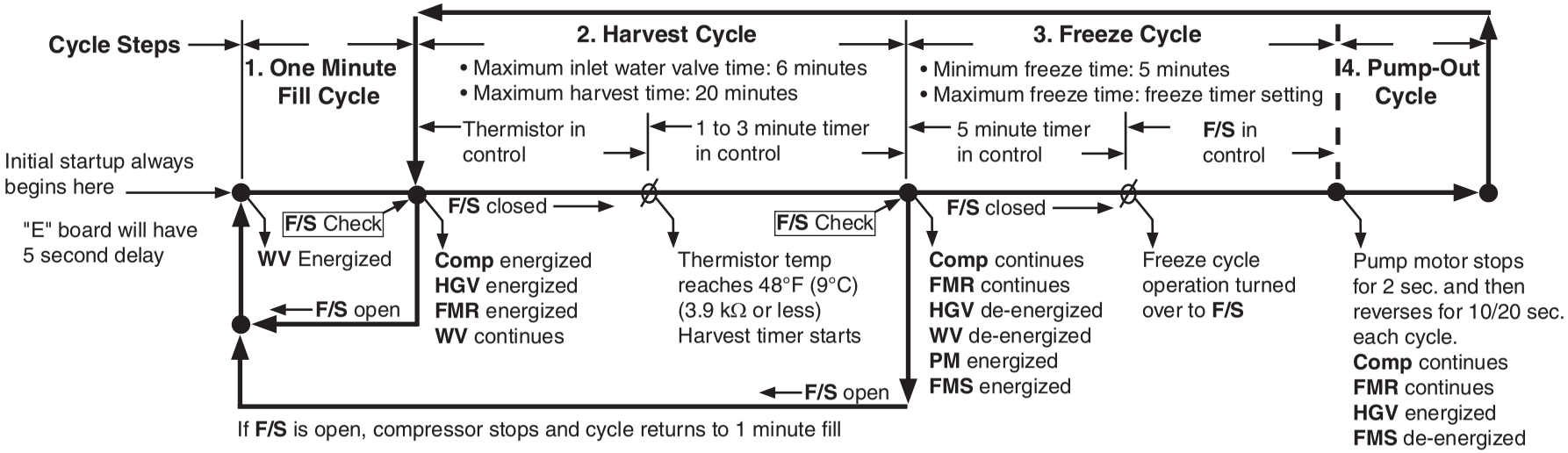

Legend:
Comp-compressor
FMR-remote fan motor
FMS-self-contained fan motor
F/S-float switch
HGV-hot gas valve
PM-pump motor
WV-inlet water valve

Components Energized when the Control Switch is in the "WASH" Position

The "WASH" position on the control switch is used when cleaning and sanitizing the unit. When in the "WASH" position, power is supplied to the pump motor. With the cleaning valve closed, the cleaner and sanitizer flow over the outside of the evaporator plate assembly. With the cleaning valve open, the cleaner and sanitizer flow over both the outside and the inside of the evaporator plate assembly.

Note: Close the cleaning valve after cleaning and sanitizing are complete, otherwise the unit will not re-start when the control switch is placed in the "ICE" position.

C. Control Board

- A HOSHIZAKI exclusive solid-state control is employed in KM-515MAH, KM-515MWH, and KM-515MRH Modular Crescent Cubers.
- All models are pretested and factory-adjusted.

CAUTION

1. Fragile, handle very carefully.
2. The control board contains integrated circuits, which are susceptible to failure due to static discharge. It is especially important to touch the metal part of the unit before handling or replacing the board.
3. Do not touch the electronic devices on the board or the back of the board to prevent damage to the board.
4. Do not change wiring and connections. Do not misconnect K3, K4, and K5, because the same connector is used for the thermistor and float switch. K4 is not connected.
5. Always replace the whole board assembly if it goes bad.
6. Do not short out power supply to test for voltage.

1. Control Board Layout

Control Products "E" Control Board

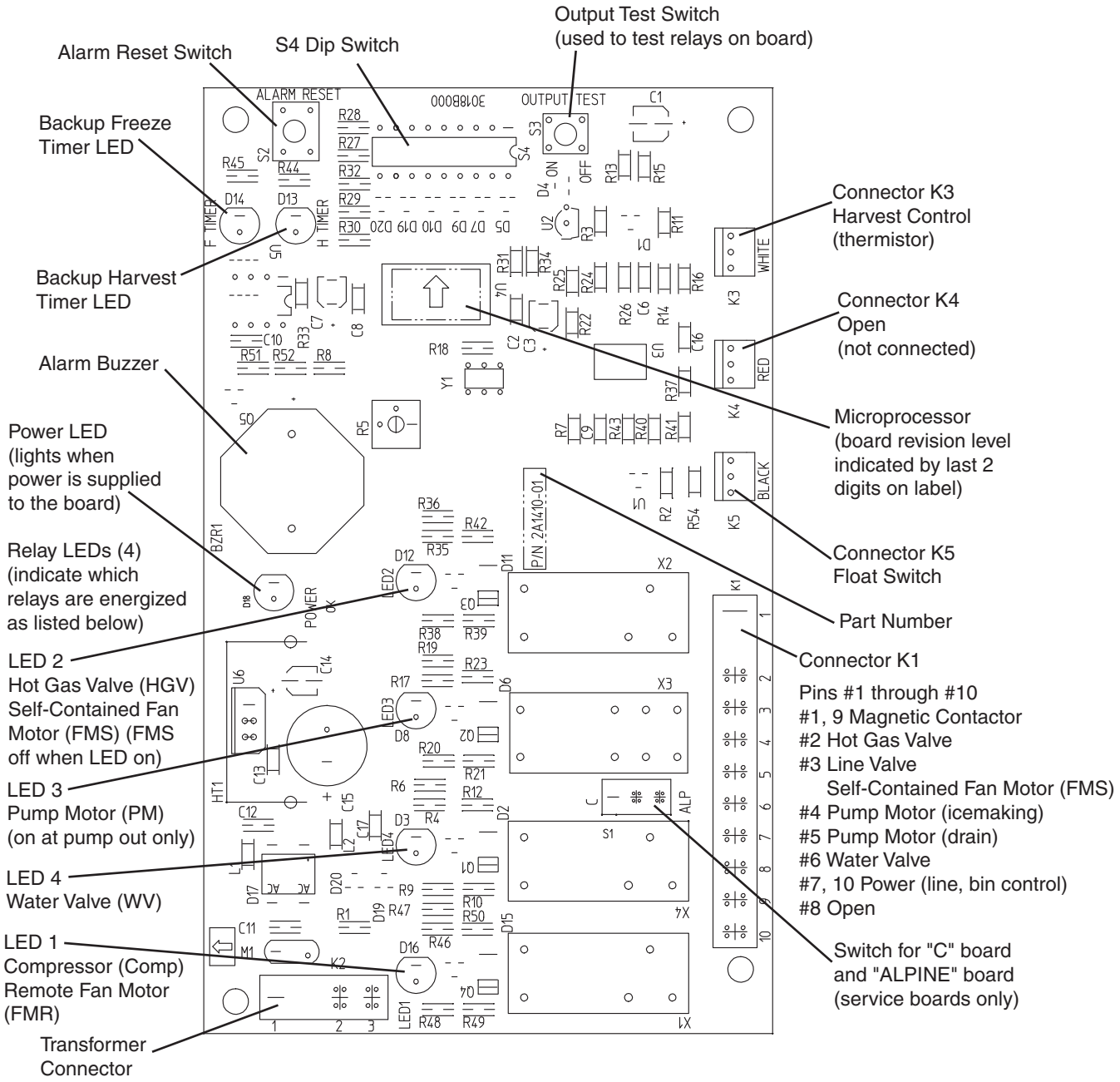

Control Board	
Part Number	2A1410-01 (factory); **2A1410-02 (service)**
Type	HOS-001A (Control Products - 10 Pin)

2. Features

a) Maximum Water Supply Period – Six minutes

The inlet water valve will be open during harvest for six minutes or the length of harvest whichever is shorter.

b) Harvest Backup Timer and Freeze Timer

The harvest backup timer shuts down the icemaker if, for two cycles in a row, the harvest cycle takes more than 20 minutes to complete. The control board will signal this problem using 2 beeps every 3 seconds.

The freeze timer shuts down the icemaker if, for two cycles in a row, the freeze cycle takes longer than the time specified to complete. The control board will signal this problem using 3 beeps every 3 seconds. The time is factory set using S4 dip switch 9 & 10.

The "ALARM RESET" button on the control board must be pressed with power on to reset either of these safeties.

c) High Temperature Safety

The temperature of the suction line in the refrigeration circuit is limited by the high temperature safety. This protects the unit from excessively high temperatures. If the evaporator temperature rises above 127 ± 7°F (53 ± 4°C), the control board reads a .804 kΩ signal from the thermistor and operates the safety. This shuts down the circuit and the icemaker automatically stops.

The control board will signal this problem using 1 beep every 3 seconds. The "ALARM RESET" button on the control board must be pressed with power on to reset the safety.

d) Low Water Safety

The control board checks the position of the float switch at the end of the initial one minute water fill cycle and at the end of each harvest cycle.

If the float switch is in the up position (electrical circuit closed), the control board changes to the ice making cycle. If the float switch is in the down position (electrical circuit open), the control board changes to additional one minute water fill cycles until water enters the sump and the float switch closes. When the float switch closes, the control board changes to the ice making cycle. The unit will not start without adequate water in the sump. This serves as a low water safety to protect the pump motor from mechanical seal failure.

For water-cooled model, if the water is shut off, the unit is protected by the high pressure switch.

e) High Voltage and Low Voltage Cut-outs

The maximum and minimum allowable supply voltages of this icemaker are limited by the high voltage and low voltage cut-outs.

If miswiring (especially on single phase 3 wire models) causes excessive voltage (147Vac ±5% or more) on the control board, the high voltage cut-out shuts down the circuit in 3 seconds and the icemaker automatically stops. The control board will signal this problem using 7 beeps every 3 seconds.

The icemaker also automatically stops in cases of insufficient voltage (92Vac ±5% or less). The control board will signal this problem using 6 beeps every 3 seconds.

When the proper supply voltage is resumed, the icemaker *automatically* starts running again.

f) LED Lights and Audible Alarm Safeties

The red LED indicates proper control voltage and will remain on unless a control voltage problem occurs. At startup, a 5 second delay occurs while the board conducts an internal timer check. A beep occurs when the power is turned off.

The green LEDs 1 through 4 energize and sequence from initial startup as listed in the table below. Note that the order of the LEDs from the outer edge of the board is 1, 4, 3, 2. For more information, see "II.B. Sequence of Operation."

Sequence Step	LED	Energized Components	Time LEDs are On		
			Min.	Max.	Avg.
1 Minute Fill Cycle	4	WV			60 seconds
Harvest Cycle	1, 4, and 2	WV, HGV, Comp, FMR	2 minutes	20 minutes	3 to 5 minutes
Freeze Cycle	1	Comp, PM, FMR/FMS, LLV	5 minutes	freeze timer setting	30 to 35 minutes
Pump-Out Cycle	1, 4*, 3, and 2	Comp, HGV, PM, FMR, WV*	10 seconds	20 seconds	*pump-out timer setting

The built in safeties shut down the unit and have alarms as listed below.

No. of Beeps (every 3 sec.)	Type of Alarm	Notes
1	High Evaporator Temp. (temperature > 127°F) (53°C)	Check for harvest problem (stuck HGV or relay), hot water entering unit, stuck HM, or shorted thermistor.
2	Harvest Backup Timer (harvest > 20 min. for two cycles in a row)	Orange LED marked H TIMER lights up. Check for open thermistor, HGV not opening, TXV leaking by, low charge, or inefficient comp.
3	Freeze Timer (freeze > specified setting for two cycles in a row) Timer is factory set using S4 dip switch 9 & 10	Yellow LED marked F TIMER lights up. Check for F/S stuck closed (up), WV leaking by, HGV leaking by, PM not pumping, TXV not feeding properly, low charge, HM not bypassing, or inefficient comp.
To reset the above safeties, press the "ALARM RESET" button with the power supply on.		
6	Low Voltage (92Vac ±5% or less)	Red LED will turn off if voltage protection operates. The control voltage safeties automatically reset when voltage is corrected.
7	High Voltage (147Vac ±5% or more)	

Legend: **Comp**–compressor; **FMR**–remote fan motor; **FMS**–self-contained fan motor; **F/S**–float switch; **HGV**–hot gas valve; **HM**–headmaster (C.P.R.); **LLV**–liquid line valve; **PM**–pump motor; **TXV**–thermostatic expansion valve; **WV**–inlet water valve

3. Controls and Adjustments

CAUTION

Dip switches are factory set. Failure to maintain factory settings may adversely affect performance and warranty coverage. For more information, contact HOSHIZAKI Technical Support at 1-800-233-1940.

a) Default S4 Dip Switch Settings

The dip switches are factory-adjusted to the following positions:

Dip Switch No.	1	2	3	4	5	6	7	8	9	10
KM-515MAH	OFF	OFF	OFF	OFF	OFF	OFF	OFF	OFF	ON	OFF
KM-515MWH	OFF	OFF	OFF	OFF	OFF	OFF	OFF	OFF	ON	OFF
KM-515MRH	OFF	OFF	OFF	OFF	OFF	OFF	OFF	OFF	ON	OFF

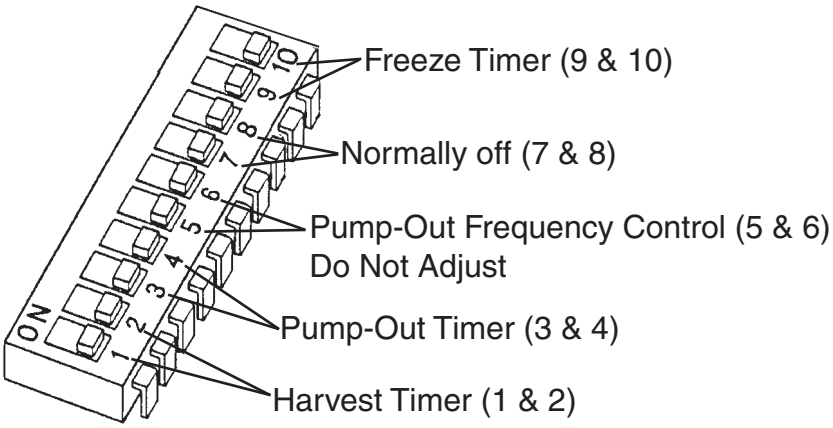

b) Harvest Timer (S4 dip switch 1 & 2)

The harvest timer is only active during the initial harvest cycle. Every cycle thereafter the pump-out timer's harvest timer (S4 dip switch 3 & 4, T2) acts in place of the harvest timer on KM-515M_H models, as the pump out occurs every cycle. See "II.C.3.c) Pump Out Timer (S4 dip switch 3 & 4)."

Dip Switch Setting		Time (seconds)
No. 1	No. 2	
OFF	OFF	60
ON	OFF	90
OFF	ON	120
ON	ON	180

c) Pump-Out Timer (S4 dip switch 3 & 4)

CAUTION

The pump-out timer is factory-adjusted, and no adjustment is required. Never adjust the pump-out timer's harvest timer (T2) for a time frame less than 150 seconds.

The pump-out timer's harvest timer (T2) acts in place of the harvest timer (S4 dip switch 1 & 2) during the pump-out cycle. On KM-515M_H models, the pump out occurs every cycle.

T1 - When the freeze cycle is complete, the pump motor stops for 2 seconds, then the pump motor re-starts in the opposite direction and the pump-out cycle begins. The pump motor drains the water tank for the time determined by the pump-out timer (T1).

T2 - The pump-out timer's harvest timer (T2) starts counting when the thermistor reads 48°F (9°C) at the evaporator outlet. Once the 10/20 second pump-out timer (T1) is complete, the pump motor stops and the inlet water valve energizes. The harvest cycle continues until the pump-out timer's harvest timer (T2) terminates.

No adjustment is required under normal use, as the pump-out timer's harvest timer (T2) is adjusted to the suitable setting. However, a setting longer than the factory setting may be advised in cases where the flush provided at harvest needs to be prolonged for extra cleaning. Before changing this setting, contact HOSHIZAKI Technical Support at 1-800-233-1940 for recommendations. Keep in mind that setting the pump-out timer's harvest timer (T2) to a longer setting will decrease 24 hour production. Never adjust the timer for a time frame less than 150 seconds.

Dip Switch Setting		Time (seconds)		Inlet Water Valve
No. 3	No. 4	T1	T2	
OFF	OFF	10	150	Closed
ON	OFF	10	180	Closed
OFF	ON	10	120	Open
ON	ON	20	180	Closed

T1: Time to drain the water tank
T2: Harvest timer at pump out

d) Pump-Out Frequency Control (S4 dip switch 5 & 6)

CAUTION

Do not adjust. Adjustments to this setting may adversely affect performance and warranty coverage.

The pump motor drains the water tank at the frequency set by the pump-out frequency control.
The pump-out frequency control is factory-adjusted to drain the water tank every cycle. Do not adjust.

Dip Switch Setting		Frequency
No. 5	No. 6	
OFF	OFF	every cycle
ON	OFF	every 2 cycles
OFF	ON	every 5 cycles
ON	ON	every 10 cycles

e) Factory Use (S4 Dip Switch 7 & 8)

Factory set for optimum performance. Do not adjust.

f) Freeze Timer (S4 dip switch 9 & 10)

CAUTION

Adjust to proper specification, or the unit may not operate correctly.

The freeze timer setting determines the maximum allowed freeze time to prevent possible freeze-up issues. Upon termination of freeze timer, the control board initiates the harvest cycle. After 2 consecutive timer terminations, the control board shuts the machine down. In this case, see "IV.B.3. Low Ice Production" for possible solutions.
The freeze timer is factory adjusted and no adjustment is required.

Dip Switch Setting		Time (minutes)
No. 9	No. 10	
OFF	OFF	60
OFF	ON	50
ON	OFF	70
ON	ON	60

4. Control Board Check Procedure

Before replacing a control board that does not show a visible defect and that you suspect is bad, always conduct the following check procedure. This procedure will help you verify your diagnosis.

1) Check the S4 dip switch settings to assure that #3, 4, 7, 8, 9, & 10 are in the factory default position. Switches 1, 2, 5, & 6 are cleaning adjustments and the settings are flexible.

2) Move the control switch to the "ICE" position. The red "POWER OK" LED should come on. If the LED is off, check the control transformer secondary circuit. The transformer secondary circuit includes the cleaning valve interlock switch. Make sure the interlock switch is closed; otherwise, no control voltage is supplied to the K2 connector. Transformer output is 10.5V at 115V primary input. If the secondary circuit has proper voltage and the red LED is off, the control board is bad and should be replaced.

   If the secondary circuit does not have proper voltage, check the control transformer primary circuit. Check for 115V at the 10-pin connector. Check the brown wire at pin #10 to a white neutral wire for 115V. (Always choose a white neutral wire to establish a good neutral connection when checking voltages.) For additional checks, see "IV.B.1.[1] The icemaker will not start."

3) The "OUTPUT TEST" button provides a relay sequence test. Make sure the control switch is in the "ICE" position, then press the "OUTPUT TEST" button. The correct lighting sequence should be none, 2, 3, 4, 1. Some components (e.g., the compressor) will cycle during the test. Note that the order of the relays from the outer edge of the board is 1, 4, 3, 2. After checking the sequence, the unit automatically starts at the 1 minute fill cycle. If the LEDs light in a different sequence, the control board is bad and should be replaced.

5. Control Board Replacement

The application switch located between relay X3 & X4 must be set to the "ALP" position. The dip switches should be adjusted to the factory default settings. See "II.C.3.a) Default Dip Switch Settings." S4 dip switch #8 must remain off.

D. Harvest Control – Thermistor

A thermistor (semiconductor) is used for a harvest control sensor. The resistance varies depending on the suction line temperatures. The thermistor detects the temperature of the evaporator outlet to start the harvest timer. No adjustment is required. If necessary, check for resistance between thermistor leads, and visually check the thermistor mounting, located on the suction line next to the evaporator outlet.

Temperature (°F)	Temperature (°C)	Resistance (kΩ)
0	-18	14.401
10	-12	10.613
32	0	6.000
50	10	3.871
70	21	2.474
90	32	1.633

Check a thermistor for resistance by using the following procedure:

1) Disconnect the connector K3 on the board.
2) Remove the thermistor. See "V.I. Removal and Replacement of Thermistor."
3) Immerse the thermistor sensor portion in a glass containing ice and water for 2 or 3 minutes.
4) Check for a resistance between thermistor leads. Normal reading is within 3.5 to 7 kΩ. Replace the thermistor if it exceeds the normal reading.

E. Bin Control

CAUTION

When the ambient temperature is below 45°F (7°C), the bin control thermostat operates to stop the icemaker even if the ice storage bin is empty. When the thermostat is set in the prohibited range, the icemaker operates continuously even if the ice storage bin is filled with ice. Setting in the prohibited range might cause severe damage to the icemaker resulting in failure.

No adjustment is required under normal use, as the bin control is factory-adjusted. Adjust it, if necessary, so that the icemaker stops automatically within 10 seconds after ice contacts the bin control thermostat bulb.

III. Technical Information

A. Water Circuit and Refrigeration Circuit

1. KM-515MAH (air-cooled)

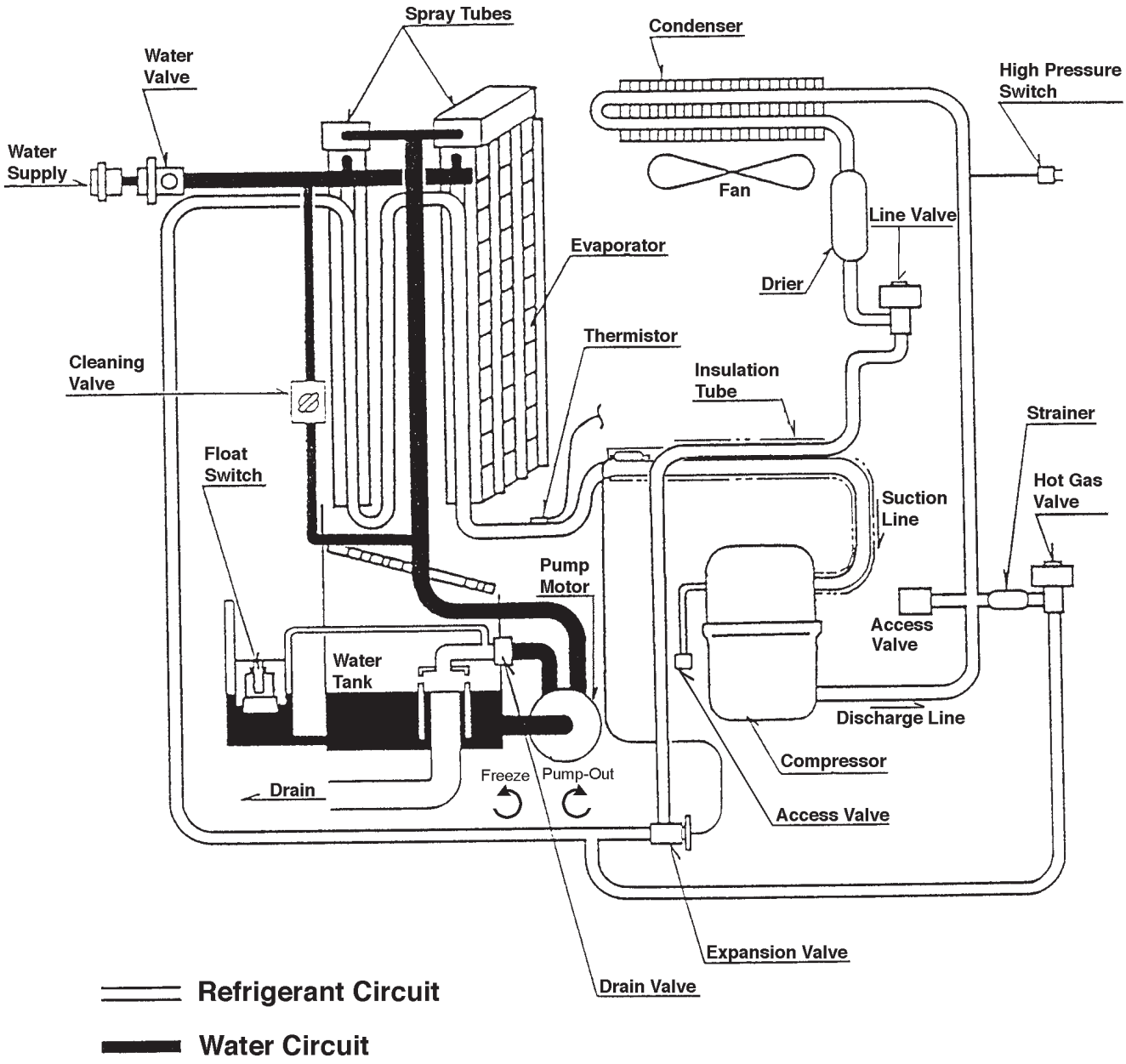

2. KM-515MWH (water-cooled)

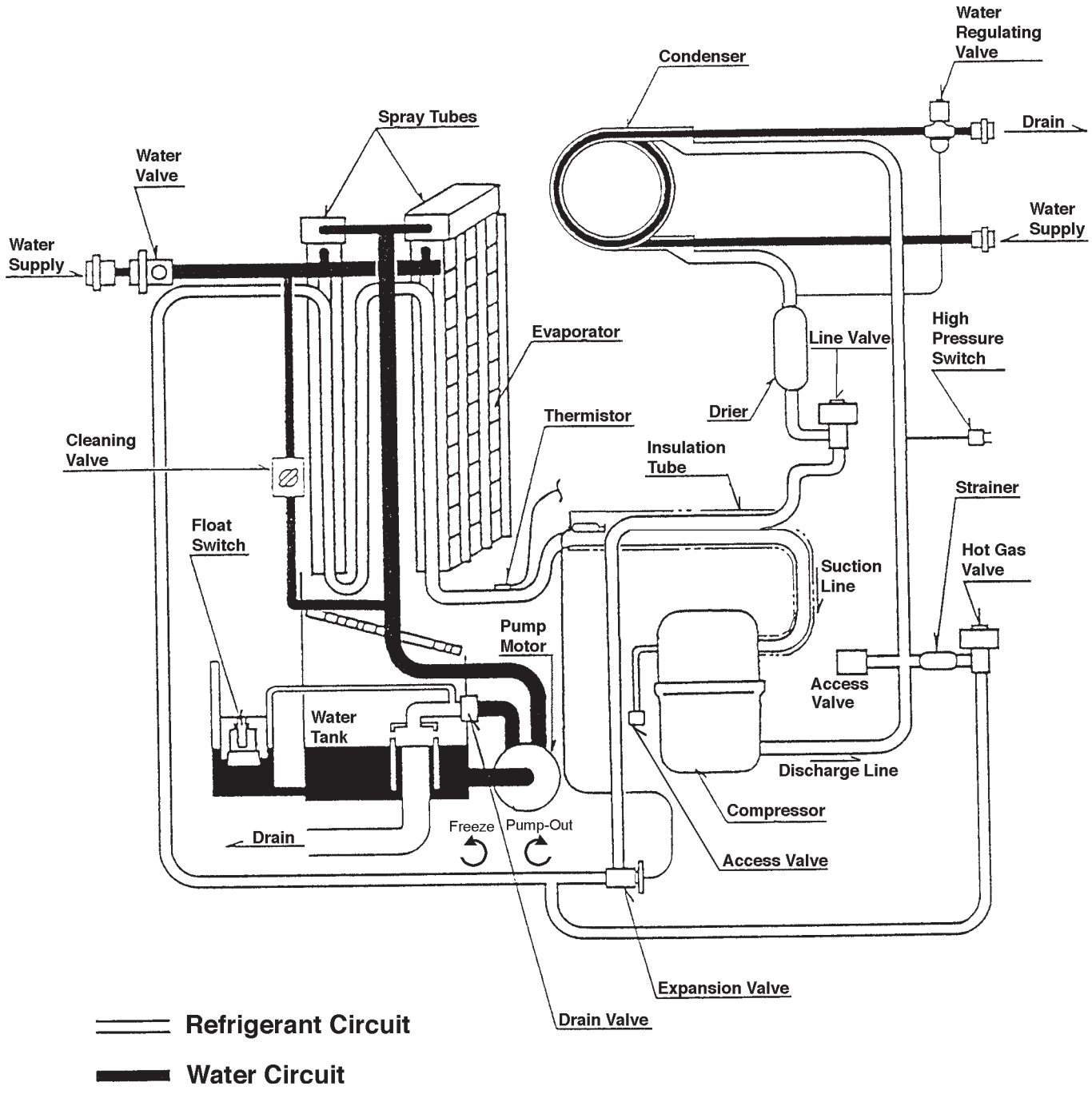

3. KM-515MRH (remote air-cooled)

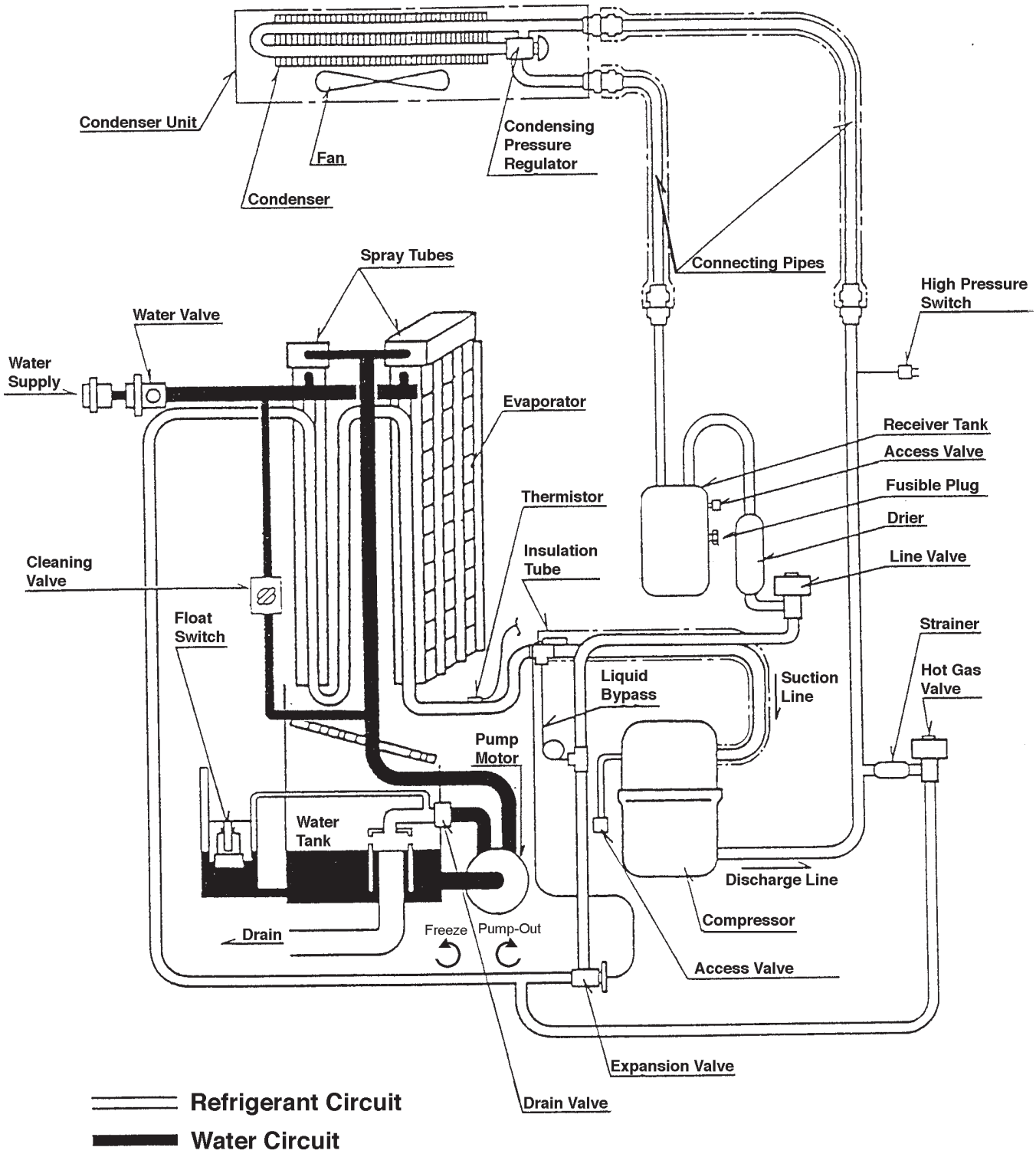

B. Wiring Diagrams

1. KM-515MAH (air-cooled) and KM-515MWH (water-cooled)

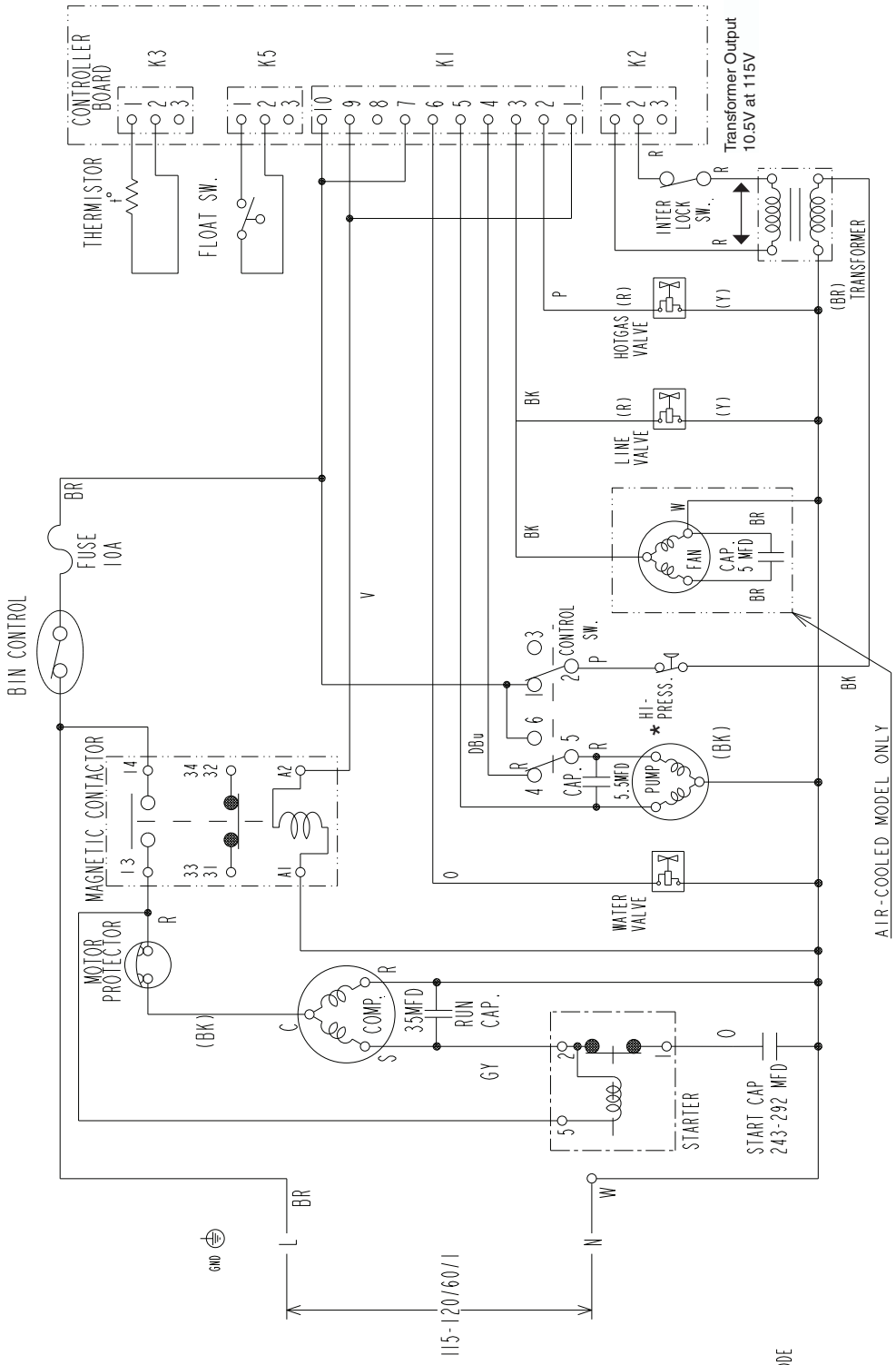

* Pressure Switch		
	Air-Cooled Model	Water-Cooled Model
Cut-out	$412\pm^{21}_{0}$ PSIG	$384\pm^{21}_{0}$ PSIG
Cut-in	327±21 PSIG	284±21 PSIG

2. KM-515MRH (remote air-cooled)

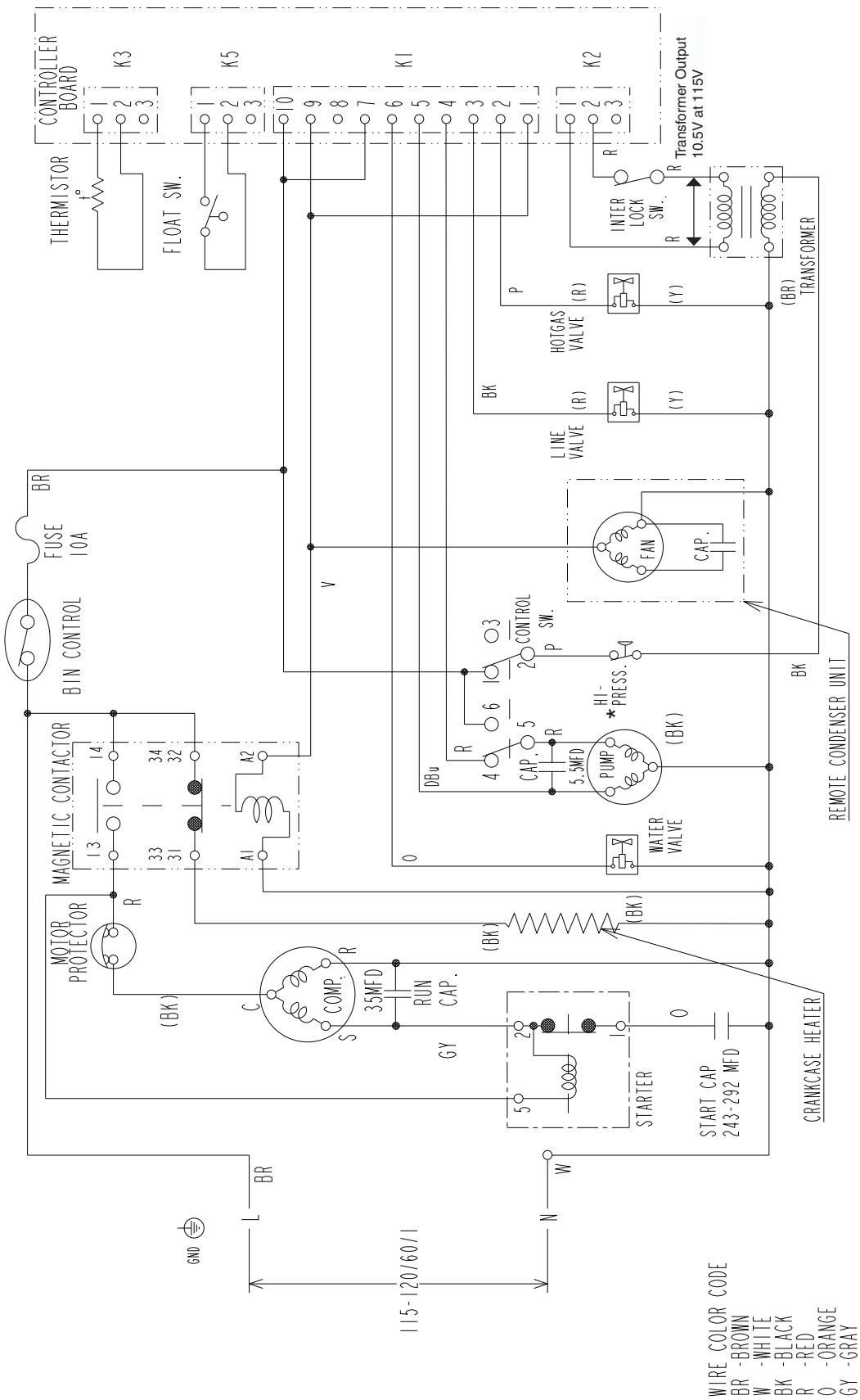

* Pressure Switch	
Cut-out	$412\pm^{21}_{0}$ PSIG
Cut-in	327±21 PSIG

C. Performance Data

1. KM-515MAH (air-cooled)

APPROXIMATE ICE PRODUCTION PER 24 HR.	AMBIENT TEMP. (ºF/ºC)	WATER TEMP. (ºF/ºC) 50/10		70/21		90/32	
	70/21	**501**	227	482	218	447	203
	80/27	486	221	456	207	416	189
	90/32	482	218	**435**	197	396	180
lbs./day kg./day	100/38	472	214	426	193	361	164
APPROXIMATE ELECTRIC CONSUMPTION	70/21	**980**		1012		1038	
	80/27	1005		1055		1071	
	90/32	1012		**1090**		1111	
watts	100/38	1011		1095		1130	
APPROXIMATE WATER CONSUMPTION PER 24 HR.	70/21	**188**	0.71	162	0.61	147	0.56
	80/27	168	0.64	128	0.48	124	0.47
	90/32	162	0.61	**99**	0.38	90	0.34
gal./day m^3/day	100/38	132	0.50	97	0.37	82	0.31
FREEZING CYCLE TIME	70/21	**26**		27		30	
	80/27	27		30		33	
	90/32	27		**32**		35	
min.	100/38	28		33		37	
HARVEST CYCLE TIME	70/21	**4.4**		3.9		3.8	
	80/27	4.0		3.2		3.4	
	90/32	3.9		**2.7**		2.7	
min.	100/38	3.4		2.7		2.7	
HEAD PRESSURE	70/21	**226**	15.9	250	17.6	278	19.5
	80/27	244	17.2	282	19.8	306	21.5
	90/32	250	17.6	**308**	21.7	335	23.5
PSIG kg/cm^2G	100/38	254	17.8	314	22.1	359	25.2
SUCTION PRESSURE	70/21	**45**	3.2	49	3.5	54	3.8
	80/27	48	3.4	55	3.8	60	4.2
	90/32	49	3.5	**59**	4.1	64	4.5
PSIG kg/cm^2G	100/38	50	3.5	60	4.2	69	4.9

TOTAL HEAT OF REJECTION FROM CONDENSER 9,600 BTU/h [AT 90ºF (32ºC) / WT 70ºF (21ºC)]

Note:
1. Pressure data is recorded at 5 minutes into freezing cycle. The data not in **bold** should be used for reference only.
2. We reserve the right to make changes in specifications and design without prior notice.

2. KM-515MWH (water-cooled)

APPROXIMATE ICE PRODUCTION PER 24 HR.	AMBIENT TEMP. (ºF/ºC)	WATER TEMP. (ºF/ºC)					
		50/10		70/21		90/32	
	70/21	**500**	227	493	223	465	211
	80/27	494	224	483	219	445	202
	90/32	493	223	**475**	215	441	200
lbs./day kg./day	100/38	481	218	467	212	409	186
APPROXIMATE ELECTRIC CONSUMPTION	70/21	**940**		943		952	
	80/27	942		947		958	
	90/32	943		**950**		960	
watts	100/38	946		952		970	
APPROXIMATE WATER CONSUMPTION PER 24 HR.	70/21	**515**	1.95	554	2.10	805	3.05
	80/27	544	2.06	605	2.29	966	3.66
	90/32	554	2.10	**648**	2.45	968	3.67
gal./day m^3/day	100/38	697	2.64	723	2.74	1262	4.78
FREEZING CYCLE TIME	70/21	**29**		29		30	
	80/27	29		29		31	
	90/32	29		**29**		31	
min.	100/38	30		30		33	
HARVEST CYCLE TIME	70/21	**3.8**		3.5		3.4	
	80/27	3.6		3.0		3.1	
	90/32	3.5		**2.7**		2.7	
min.	100/38	3.1		2.7		2.7	
HEAD PRESSURE	70/21	**270**	19.0	271	19.0	274	19.3
	80/27	271	19.0	272	19.1	276	19.4
	90/32	271	19.0	**273**	19.2	277	19.5
PSIG kg/cm^2G	100/38	272	19.1	274	19.3	280	19.7
SUCTION PRESSURE	70/21	**50**	3.5	52	3.6	56	3.9
	80/27	51	3.6	54	3.8	59	4.2
	90/32	52	3.6	**56**	3.9	61	4.3
PSIG kg/cm^2G	100/38	53	3.7	57	4.0	65	4.6

TOTAL HEAT OF REJECTION FROM CONDENSER	8,300 BTU/h [AT 90ºF (32ºC) / WT 70ºF (21ºC)]
TOTAL HEAT OF REJECTION FROM COMPRESSOR	1,300 BTU/h [AT 90ºF (32ºC) / WT 70ºF (21ºC)]
WATER FLOW FOR CONDENSER	49 gal./h [AT 100ºF (38ºC) / WT 90ºF (32ºC)]
PRESSURE DROP OF COOLING WATER LINE	less than 10 PSIG

Note:

1. Pressure data is recorded at 5 minutes into freezing cycle. The data not in **bold** should be used for reference only.
2. We reserve the right to make changes in specifications and design without prior notice.

3. KM-515MRH (remote air-cooled)

APPROXIMATE ICE PRODUCTION PER 24 HR.	AMBIENT TEMP. (ºF/ºC)	WATER TEMP. (ºF/ºC) 50/10		70/21		90/32	
	70/21	**491**	223	480	218	443	201
	80/27	482	219	465	211	417	189
	90/32	480	218	**452**	205	408	185
lbs./day kg./day	100/38	465	211	442	200	368	167
APPROXIMATE ELECTRIC CONSUMPTION	70/21	**1000**		1026		1058	
	80/27	1020		1061		1091	
	90/32	1026		**1090**		1121	
watts	100/38	1031		1097		1150	
APPROXIMATE WATER CONSUMPTION PER 24 HR.	70/21	**198**	0.75	168	0.64	153	0.58
	80/27	175	0.66	128	0.48	128	0.49
	90/32	168	0.64	**94**	0.36	88	0.33
gal./day m^3/day	100/38	133	0.50	93	0.35	82	0.31
FREEZING CYCLE TIME	70/21	**26**		27		30	
	80/27	27		29		32	
	90/32	27		**31**		34	
min.	100/38	28		31		36	
HARVEST CYCLE TIME	70/21	**5.0**		4.3		4.1	
	80/27	4.5		3.4		3.6	
	90/32	4.3		**2.7**		2.7	
min.	100/38	3.6		2.7		2.7	
HEAD PRESSURE	70/21	**216**	15.2	234	16.4	252	17.7
	80/27	230	16.1	257	18.1	272	19.1
	90/32	234	16.4	**277**	19.5	294	20.6
PSIG kg/cm^2G	100/38	235	16.6	281	19.8	309	21.7
SUCTION PRESSURE	70/21	**47**	3.3	50	3.5	52	3.6
	80/27	49	3.5	54	3.8	54	3.8
	90/32	50	3.5	**57**	4.0	58	4.1
PSIG kg/cm^2G	100/38	50	3.5	57	4.0	59	4.1

TOTAL HEAT OF REJECTION FROM CONDENSER	8,500 BTU/h [AT 90ºF (32ºC) / WT 70ºF (21ºC)]
TOTAL HEAT OF REJECTION FROM COMPRESSOR	1,400 BTU/h [AT 90ºF (32ºC) / WT 70ºF (21ºC)]
CONDENSER VOLUME	43 CU. IN (URC-5F)

Note:
1. Pressure data is recorded at 5 minutes into freezing cycle. The data not in **bold** should be used for reference only.
2. We reserve the right to make changes in specifications and design without prior notice.

IV. Service Diagnosis

A. 10-Minute KM Diagnostic Procedure

The 10 minute check out procedure is basically a sequence check which can be used at unit start-up or for system diagnosis. Using this check out procedure will allow you to diagnose electrical system and component failures in approximately 10 minutes under normal operating conditions of 70°F (21°C) or warmer air and 50°F (10°C) or warmer water temperatures. Before conducting a 10 minute checkout, check for correct installation, proper voltage per unit nameplate, and adequate water supply. Check the S4 dip switch settings to assure that they are in the factory default position. For factory default settings, see "II.C.3.a) Default Dip Switch Settings." As you go through the procedure, check to assure the components energize and de-energize correctly. If not, those components and controls are suspect. Check for voltage at the 10-pin connector.

1) Turn power off and access the control box.

2) Turn power on and place the control switch in the "ICE" position. A 5 second delay occurs. The red "POWER OK" LED on the control board comes on.

3) **One Minute Fill Cycle** – LED 4 is on. The inlet water valve is energized. After 1 minute, the control board checks the float switch. If the float switch is closed, the unit cycles to harvest. If closed, continue to step 4. If the float switch is open, the unit repeats the 1 minute fill cycle until water enters and the float switch closes (low water safety protection during initial start up and at the end of each harvest). **Diagnosis:** If the inlet water valve does not open, check for no supply voltage at water valve terminals, bad coil, or plugged screen or external filter (no water flow). If unit fails to start harvest, check for open float switch or bad 1 minute timer in control board.

4) **Initial Harvest Cycle** – LEDs 1, 4, and 2 are on. The inlet water valve remains energized, the contactor coil energizes to start the compressor (and fan motor on a remote air-cooled unit), and the hot gas valve energizes. The inlet water valve is open during harvest for a maximum of six minutes or the length of harvest which ever is shorter. The evaporator warms and the thermistor senses 48°F (9°C). The control board then receives the thermistor's 3.9 kΩ signal and turns operation of harvest over to the harvest timer. When the harvest timer is complete, the freeze cycle starts. **Diagnosis:** Check if compressor is running, hot gas valve is open, inlet water valve still open. Average harvest cycle at factory setting is 2 to 3 minutes. How long does initial harvest last? 1.5 minutes after initial harvest begins, touch the compressor discharge line. Is it hot? If not, check refrigerant pressures and compressor operation. If it is hot, touch the inlet line to the evaporator. Is it hot? If it is hot and the freeze cycle is not starting, check the harvest timer adjustment, the thermistor for open circuit, the discharge line temperature, compressor efficiency, and if the hot gas valve is fully open.

5) **Freeze Cycle** – LED 1 is on. Compressor (and fan motor on a remote air-cooled unit) remains energized, pump motor, line valve (if applicable), and fan motor (self-contained air-cooled unit) energize. The inlet water valve and hot gas valve de-energize. The unit is held in freeze by a 5 minute short cycle protection timer. After the 5 minute short cycle protection timer terminates, the freeze cycle operation is transferred to the float switch for freeze termination. During the first 5 minutes of freeze, confirm that the evaporator temperature drops. After 5 minutes in freeze, remove the black float switch lead from the K5 connector. The unit should switch out of the freeze cycle. **Diagnosis:** If the evaporator is not cold, check to see if the hot gas valve is still open or if the expansion valve is not opening properly, if the water valve is continuing to fill the reservoir, if there are improper unit pressures, an inoperative compressor, or an inoperative headmaster (C.P.R.) (remote air-cooled unit only). If the unit remains in freeze with the float switch removed, replace the board.

   Note: Normal freeze cycle will last 20 to 40 minutes depending on model and conditions. Cycle times and pressures should follow performance data provided in this manual.

6) **Pump-Out Cycle (10/20 second pump out)** – LEDs 1, 4, 3, 2 are on. The pump out occurs after the 1st freeze cycle and every cycle thereafter. The pump-out frequency control (S4 dip switch 5 & 6) should not be adjusted.

   The compressor remains energized, the hot gas valve energizes, the fan motor de-energizes (self-contained air-cooled unit only), the pump motor stops for 2 seconds and starts in reverse rotation for 10/20 seconds. This removes contaminants from the water reservoir. **Diagnosis:** If the pump motor does not reverse, check the circuit and pump capacitor. If water does not pump out, check for clear tubing at the check valve housing and check the unit drain for water flow. Remove the pump out check valve housing and check/clean the valve assembly.

7) **Normal Harvest Cycle** – LEDs 1, 4, and 2 are on. The hot gas valve and compressor remain energized and the inlet water valve energizes. The inlet water valve is open during harvest for a maximum of six minutes or the length of harvest which ever is shorter. The evaporator warms and the thermistor senses 48°F (9°C). The control board then receives the thermistor's 3.9 kΩ signal and turns operation of harvest over to the pump-out timer's harvest timer. When the pump-out timer's harvest timer is complete, the freeze cycle starts. **Diagnosis:** Check if compressor is running, hot gas valve is open, inlet water valve still open. Average harvest cycle at factory setting is 2 to 3 minutes. How long does initial harvest last? 1.5 minutes after initial harvest begins, touch the compressor discharge line. Is it hot? If not, check refrigerant pressures and compressor operation. If it is hot, touch the inlet line to the evaporator. Is it hot? If it is hot and the freeze cycle is not starting, check the pump-out timer adjustment, the thermistor for open circuit, the discharge line temperature, compressor efficiency, and if the hot gas valve is fully open.

   Note: Unit continues to cycle until bin control is satisfied or power is switched off. The unit always restarts at the 1 minute fill cycle.

B. Diagnostic Charts

1. No Ice Production

Problem	Possible Cause		Remedy
[1] The icemaker will not start.	a) Power Supply	1. Off, blown fuse, or tripped breaker.	1. Turn on, replace, or reset.
		2. Loose connection.	2. Tighten.
		3. Bad contacts.	3. Check for continuity and replace.
		4. Not within specifications.	4. Refer to nameplate and correct.
	b) Water Supply	1. Water supply off or pressure too low.	1. Check and get recommended pressure.
	c) Fuse (Control Box)	1. Blown.	1. Check for short circuit and replace.
	d) Control Switch	1. "OFF" or "WASH" position.	1. Move to "ICE" position.
		2. Bad contacts.	2. Check for continuity and replace.
	e) Bin Control Thermostat	1. Tripped with bin filled with ice.	1. Remove ice.
		2. Ambient temperature too cool.	2. Increase ambient temperature.
		3. Set too warm.	3. See "II.E. Bin Control."
		4. Bulb out of position.	4. Place in position.
		5. Bad contacts.	5. Check for continuity and replace.
	f) High Pressure Control	1. Bad contacts.	1. Check for continuity and replace.
		2. Dirty air filter or condenser.	2. Clean.
		3. Ambient or condenser water temperature too warm.	3. Reduce temperature.
		4. Refrigerant overcharged.	4. Recharge.
		5. Fan not operating. (except water-cooled model)	5. See chart 1.[7]
		6. Refrigerant line or components plugged.	6. Clean and replace drier.
		7. Condenser water pressure too low or off. (water-cooled model only)	7. Check and get recommended pressure.

Problem	Possible Cause		Remedy
[1] The icemaker will not start. (continued)	g) Transformer	1. Coil winding opened or shorted.	1. Replace.
	h) Wiring to Control Board	1. Loose connections or open.	1. Check for continuity and replace.
	i) Interlock Switch (Cleaning Valve)	1. Open position.	1. Move to closed position.
		2. Bad contacts.	2. Check for continuity and replace.
	j) Thermistor	1. Leads shorted or opened and high temperature or harvest backup timer safety operates. (1 beep or 2 beep alarm)	1. See "II.D. Harvest Control – Thermistor."
	k) Hot Gas Valve	1. Continues to open in freeze cycle and freeze timer safety operates. (3 beep alarm)	1. Check for hot gas valve stuck open and replace.
	l) Inlet Water Valve	1. Mesh filter or orifice gets clogged and water supply cycle does not finish.	1. Clean.
		2. Coil winding opened.	2. Replace.
		3. Wiring to water valve.	3. Check for loose connection or open, and replace.
	m)Control Board	1. Defective or in alarm.	1. See "II.C.4. Control Board Check Procedure."
[2] Water continues to be supplied, and the icemaker will not start.	a) Float Switch	1. Connector disconnected.	1. Reconnect.
		2. Defective switch.	2. Check and replace.
		3. Float does not move freely.	3. Clean or replace.
	b) Control Board	1. Defective.	1. See "II.C.4. Control Board Check Procedure."
[3] Compressor will not start or stops operating.	a) Magnetic Contactor	1. Bad contacts.	1. Check for continuity and replace.
		2. Coil winding opened.	2. Replace.
	b) Start Capacitor or Run Capacitor	1. Defective.	1. Replace.
	c) Internal Overload Protector Open (check 1 through 3 to the right and d through f below)	1. Loose terminal.	1. Tighten or replace.
		2. Voltage.	2. Check and correct.
		3. Dirty condenser.	3. Clean.

Problem	Possible Cause		Remedy
[3] Compressor will not start or stops operating. (continued)	d) Starter	1. Bad contacts.	1. Check and replace.
		2. Coil winding opened.	2. Replace.
	e) Compressor	1. Power supply not within specifications.	1. Refer to nameplate and correct.
		2. Wiring to compressor.	2. Check for loose connection or open, and replace.
		3. Defective.	3. Replace.
		4. Protector tripped.	4. Reduce temperature.
	f) Control Board	1. No power to contactor.	1. See "II.C.4. Control Board Check Procedure."
[4] Water continues to be supplied in freeze cycle.	a) Water Pressure	1. Too high.	1. Reduce.
	b) Inlet Water Valve	1. Diaphragm does not close.	1. Check for water leaks with icemaker off.
	c) Control Board	1. Defective.	1. See "II.C.4. Control Board Check Procedure."
[5] Water pump will not start.	a) Pump Motor	1. Motor winding opened.	1. Replace.
		2. Bearing worn out.	2. Replace.
		3. Wiring to pump motor.	3. Check for loose connection or open, and replace.
		4. Defective capacitor.	4. Replace.
		5. Defective or bound impeller.	5. Replace and clean.
		6. Mechanical seal worn out.	6. Check and replace.
	b) Control Board	1. Defective.	1. See "II.C.4. Control Board Check Procedure."
	c) Control Switch	1. Bad contacts.	1. Replace.
[6] Freeze cycle time is too short.	a) Pump Out Check Valve	1. Leaking by.	1. Clean or replace.
	b) Float Switch	1. Dirty or erratic operation.	1. Clean or replace.
	c) Control Board	1. Defective.	1. See "II.C.4. Control Board Check Procedure."
[7] Fan motor will not start, or is not operating. (except water-cooled model)	a) Fan Motor	1. Motor winding opened.	1. Replace.
		2. Bearing worn out.	2. Replace.
		3. Wiring to fan motor.	3. Check for loose connection or open, and replace.
		4. Defective capacitor.	4. Replace.
		5. Fan blade bound.	5. Check and replace.
	b) Control Board	1. Defective.	1. See "II.C.4. Control Board Check Procedure."

Problem	Possible Cause		Remedy
[8] All components run, but no ice is produced.	a) Refrigerant	1. Low charge.	1. Check for leaks and recharge.
		2. Air or moisture trapped.	2. Replace drier and recharge.
	b) Compressor	1. Defective valve.	1. Replace.
	c) Hot Gas Valve	1. Continues to open in freeze cycle.	1. Check and replace.
	d) Line Valve (if applicable)	1. Continues to close in freeze cycle.	1. Check and replace.
	e) Inlet Water Valve	1. Water valve is wide open during freeze.	1. Check for water leaks with icemaker off.
	f) Expansion Valve	1. Operating erratically.	1. Check and replace.
	g) Headmaster (C.P.R.) (remote air-cooled model only)	1. Not operating properly and liquid line temperature too warm.	1. Replace headmaster.
	h) Water Supply Line (water-cooled model only)	1. Condenser water pressure too low or off and high pressure control opens and closes frequently.	1. Check and get recommended pressure.
	i) Water Regulating Valve (water-cooled model only)	1. Set too high.	1. Adjust or replace. See "V.G. Adjustment of Water Regulating Valve."

2. Evaporator is Frozen Up

Problem	Possible Cause		Remedy
[1] Freeze cycle time is too long.	a) Float Switch	1. Leads short-circuit or defective switch.	1. Check and replace.
		2. Float does not move freely.	2. Clean or replace.
	b) Inlet Water Valve	1. Diaphragm does not close.	1. Check for water leaks with icemaker off.
	c) Control Board	1. Defective.	1. See "II.C.4. Control Board Check Procedure."
	d) Water Pump	1. RPM too slow.	1. Check and replace.
	e) Spray Tubes	1. Clogged.	1. Unclog.
	f) Evaporator	1. Scaled up.	1. Clean.
	g) Expansion Valve	1. Operating erratically.	1. Check and replace.

Problem	Possible Cause		Remedy
[2] All ice formed on evaporator does not fall into bin in harvest cycle.	a) Evaporator	1. Scaled up.	1. Clean.
	b) Water Supply Line	1. Water pressure too low.	1. Check and get recommended pressure.
	c) Water Filter System	1. Dirty/Restricted.	1. Replace filter.
	d) Inlet Water Valve	1. Dirty mesh filter or orifice.	1. Clean.
		2. Diaphragm does not close.	2. Check for water leaks with icemaker off.
	e) Ambient and/or water temperature.	1. Too cool.	1. Increase temperature.
	f) Line Valve (if applicable)	1. Continues to open in harvest cycle.	1. Check operation in harvest cycle and replace.
	g) Thermistor	1. Out of position or loose attachment.	1. See "V.I. Removal and Replacement of Thermistor."
	h) Control Board	1. Harvest timer is set too short.	1. Adjust longer, referring to "II.C.3. Controls and Adjustments, b) Harvest Timer."
		2. Defective.	2. See "II.C.4. Control Board Check Procedure."
	i) Water Regulating Valve (water-cooled model only)	1. Leaking by in harvest.	1. Check and replace.
[3] Other.	a) Spray Tubes	1. Clogged.	1. Clean.
		2. Out of position.	2. Place in position.
	b) Water System	1. Dirty.	1. Clean.
		2. Water supply line too small; requires 3/8" OD line dedicated per machine.	2. Increase water line size.
		3. Water filter flow rate too small.	3. Replace with filter that has larger flow rate.
	c) Refrigerant	1. Low charge.	1. Check for leaks and recharge.
	d) Expansion Valve	1. Bulb out of position or loose attachment.	1. Place in position.
		2. Defective.	2. Replace.
	e) Hot Gas Valve	1. Coil winding opened.	1. Replace.
		2. Plunger does not move.	2. Replace.
		3. Wiring to hot gas valve.	3. Check for loose connection or open, and replace.
	f) Ice Cube Guide	1. Out of position and ice trapped.	1. Place in position.

3. Low Ice Production

Problem	Possible Cause	Remedy
[1] Freeze cycle time is long.	a) See chart 2.[1] and check float switch, inlet water valve, control board, water pump, spray tubes, evaporator, and expansion valve.	
	b) See chart 1.[1] and check dirty air filter or condenser, ambient or water temperature, refrigerant charge, water pressure, and condenser water regulating valve (water-cooled model only).	
	c) Check pump, hot gas valve, headmaster (C.P.R.) (remote air-cooled model only), expansion valve, refrigeration check valve, and compressor.	
[2] Harvest cycle time is long.	a) See chart 2.[2] and check evaporator, water supply line, inlet water valve, ambient and/or water temperature, line valve (if applicable), thermistor, control board, and hot gas valve.	

4. Abnormal Ice

Problem	Possible Cause		Remedy
[1] Small cubes.	a) Ice Cube Guide	1. Out of position. Circulated water falls into bin.	1. Place in position.
	b) See chart 1.[5] and check water supply line, inlet water valve, water system, pump motor, and control board.		
	c) Pump Out Check Valve	1. Dirty or worn.	1. Clean or replace.
[2] Cloudy or irregular cubes.	a) See chart 2.[1] and 2.[3], and check float switch, inlet water valve, control board, spray tubes, water system, refrigerant charge, and expansion valve.		
	b) Spray Guide	1. Dirty.	1. Clean.
	c) Water Quality	1. High hardness or contains impurities.	1. Install a water softener or filter.

5. Other

Problem	Possible Cause		Remedy
[1] Icemaker will not stop when bin is filled with ice.	a) Bin Control Thermostat	1. Set too cold.	1. See "II.E. Bin Control."
		2. Defective.	2. Replace.
[2] Abnormal noise.	a) Pump Motor	1. Bearings worn out.	1. Replace.
	b) Fan Motor (except water-cooled model)	1. Bearings worn out.	1. Replace.
		2. Fan blade deformed.	2. Replace.
		3. Fan blade does not move freely.	3. Replace.
	c) Compressor	1. Bearings worn out or cylinder valve broken.	1. Replace.
		2. Mounting pad out of position.	2. Reinstall.
	d) Refrigerant Lines	1. Rub or touch other lines or surfaces.	1. Reposition.
[3] Ice in storage bin often melts.	a) Drain Line(s)	1. Plugged.	1. Clean.
	b) Icemaker and Bin	1. Drains not run separately.	1. Separate the drain lines.
	c) Ice Cube Guide	1. Out of position. Circulated water falls into bin.	1. Place in position.

V. Removal and Replacement of Components

IMPORTANT

1. Ensure all components, fasteners, and thumbscrews are securely in place after the equipment is serviced.
2. The Polyol Ester (POE) oils used in R-404A units can absorb moisture quickly. Therefore it is important to prevent moisture from entering the system when replacing or servicing parts.
3. Always install a new drier every time the sealed refrigeration system is opened. Do not replace the drier until after all other repair or replacement has been made.
4. Do not leave the system open for longer than 15 minutes when replacing or servicing parts.

A. Service for Refrigerant Lines

WARNING

Use an electronic leak detector or soap bubbles to check for leaks. Add a trace of refrigerant to the system (if using an electronic leak detector), and then raise the pressure using nitrogen gas (140 PSIG). DO NOT use R-404A as a mixture with pressurized air for leak testing.

1. Refrigerant Recovery

The icemaker unit is provided with refrigerant access valves. Using proper refrigerant practices, recover the refrigerant from the access valves and store it in an approved container. Do not discharge the refrigerant into the atmosphere.

2. Brazing

WARNING

1. R-404A itself is not flammable at atmospheric pressure and temperatures up to 176°F (80°C).
2. R-404A itself is not explosive or poisonous. However, when exposed to high temperatures (open flames), R-404A can be decomposed to form hydrofluoric acid and carbonyl fluoride both of which are hazardous.
3. Always recover the refrigerant and store it in an approved container. Do not discharge the refrigerant into the atmosphere.
4. Do not use silver alloy or copper alloy containing arsenic.
5. Use an electronic leak detector or soap bubbles to check for leaks. Add a trace of refrigerant to the system (if using an electronic leak detector), and then raise the pressure using nitrogen gas (140 PSIG). DO NOT use R-404A as a mixture with pressurized air for leak testing.

1) Always install a new drier every time the sealed refrigeration system is opened. Do not replace the drier until after all other repair or replacement has been made. Install the new drier with the arrow on the drier in the direction of the refrigerant flow.

2) Braze all fittings while purging with nitrogen gas flowing at a pressure of 3 to 4 PSIG.
   Note: Because the pipes in the evaporator case are specially coated to resist corrosion, it is important to make connections outside the evaporator case when possible. If it is necessary to braze inside the evaporator case, use sandpaper to remove the coating from the brazing connections before unbrazing the components.

3) Use an electronic leak detector or soap bubbles to check for leaks. Add a trace of refrigerant to the system (if using an electronic leak detector), and then raise the pressure using nitrogen gas (140 PSIG). DO NOT use R-404A as a mixture with pressurized air for leak testing.

3. Evacuation and Recharge (R-404A)

1) Attach a vacuum pump to the system. Be sure to connect charging hoses to both high and low-side access valves.

IMPORTANT

The vacuum level and vacuum pump may be the same as those for current refrigerants. However, the rubber hose and gauge manifold to be used for evacuation and refrigerant charge should be exclusively for POE oils.

2) Turn on the vacuum pump. Open the service manifold valves. Never allow the oil in the vacuum pump to flow backwards.

3) Allow the vacuum pump to pull down to a 29.9" Hg vacuum. Evacuating period depends on pump capacity.

4) Close the low-side valve and high-side valve on the service manifold.

5) Disconnect the vacuum pump and attach a refrigerant service cylinder to the high-side line. Remember to loosen the connection and purge the air from the hose.
   For air-cooled and water-cooled models, see the nameplate for the required refrigerant charge. For remote air-cooled models, see the rating label inside the icemaker.
   Hoshizaki recommends only virgin refrigerant or reclaimed refrigerant which meets ARI Standard No. 700-88 be used.

6) A liquid charge is recommended for charging an R-404A system. Invert the service cylinder and place it on scales. Open the high-side valve on the service manifold.

7) Allow the system to charge with liquid until the proper charge weight is met.

8) If necessary, add any remaining charge to the system through the low-side. Use a throttling valve or liquid dispensing device to add the remaining liquid charge through the low-side access port with the unit running.

9) Close the service manifold valves and disconnect the service manifold hoses.

10) Cap the access valves to prevent a possible leak.

B. Removal and Replacement of Compressor

IMPORTANT

Always install a new drier every time the sealed refrigeration system is opened. Do not replace the drier until after all other repair or replacement has been made.

Note: When replacing a compressor with a defective winding, be sure to install the new start capacitor and start relay supplied with the replacement compressor. Due to the ability of the POE oil in the compressor to absorb moisture quickly, the compressor must not be opened more than 15 minutes for replacement or service. Do not mix lubricants of different compressors even if both are charged with R-404A, except when they use the same lubricant.

1) Turn off the power supply.
2) Remove the panels.
3) Recover the refrigerant and store it in an approved container.
4) Remove the terminal cover on the compressor and disconnect the compressor wiring. On remote air-cooled model, disconnect the crankcase heater.
5) Remove the hold-down bolts, washers, and rubber grommets.
6) Remove the discharge and suction pipes.
7) Remove the compressor. Unpack the new compressor package.
8) Attach the rubber grommets of the prior compressor.
9) Place the compressor in position and secure it using the bolts and washers.
10) Remove the drier, then place the new drier in position.
11) Remove the plugs from the suction, discharge, and process pipes.
12) Braze all fittings while purging with nitrogen gas flowing at a pressure of 3 to 4 PSIG.
13) Use an electronic leak detector or soap bubbles to check for leaks. Add a trace of refrigerant to the system (if using an electronic leak detector), and then raise the pressure using nitrogen gas (140 PSIG). DO NOT use R-404A as a mixture with pressurized air for leak testing.
14) Evacuate the system and charge it with refrigerant. For air-cooled and water-cooled models, see the nameplate for the required refrigerant charge. For remote air-cooled models, see the rating label inside the icemaker.
15) Connect the terminals and replace the terminal cover in its correct position. On remote air-cooled model, connect the crankcase heater.
16) Replace the panels in their correct positions.
17) Turn on the power supply.

C. Removal and Replacement of Expansion Valve

IMPORTANT

Sometimes moisture in the refrigeration circuit exceeds the drier capacity and freezes up at the expansion valve. Always install a new drier every time the sealed refrigeration system is opened. Do not replace the drier until after all other repair or replacement has been made.

1) Turn off the power supply.
2) Remove the panels.
3) Recover the refrigerant and store it in an approved container.
4) Remove the insulation and the expansion valve bulb on the suction line.
5) Remove the expansion valve cover and disconnect the expansion valve. Place the new expansion valve in position.
6) Remove the drier, then place the new drier in position.
7) Braze all fittings while purging with nitrogen gas flowing at a pressure of 3 to 4 PSIG.

CAUTION

Always protect the valve body by using a damp cloth to prevent the valve from overheating. Do not braze with the valve body exceeding 250°F (121°C).

8) Use an electronic leak detector or soap bubbles to check for leaks. Add a trace of refrigerant to the system (if using an electronic leak detector), and then raise the pressure using nitrogen gas (140 PSIG). DO NOT use R-404A as a mixture with pressurized air for leak testing.
9) Evacuate the system, and charge it with refrigerant. For air-cooled and water-cooled models, see the nameplate for the required refrigerant charge. For remote air-cooled models, see the rating label inside the icemaker.
10) Attach the expansion valve bulb to the suction line in the same location as the previous bulb. The bulb should be at the 12 o'clock position on the tube. Be sure to secure the bulb with the clamp and holder and to insulate it.
11) Place the expansion valve cover in position.
12) Replace the panels in their correct positions.
13) Turn on the power supply.

D. Removal and Replacement of Hot Gas Valve or Line Valve

IMPORTANT

1. Always use a copper tube of the same diameter and length when replacing the hot gas lines; otherwise the performance may be reduced.
2. Always install a new drier every time the sealed refrigeration system is opened. Do not replace the drier until after all other repair or replacement has been made.
3. Always replace the strainer when replacing the hot gas valve.

1) Turn off the power supply.
2) Remove the panels.
3) Recover the refrigerant and store it in an approved container.
4) Remove the screw and the solenoid.
5) Disconnect the valve. If replacing the hot gas valve, also remove the strainer.
6) Place the new valve and strainer (if applicable) in position.
7) Remove the drier, then place the new drier in position.
8) Braze all fittings while purging with nitrogen gas flowing at a pressure of 3 to 4 PSIG.

CAUTION

Always protect the valve body by using a damp cloth to prevent the valve from overheating. Do not braze with the valve body exceeding 250°F (121°C).

9) Use an electronic leak detector or soap bubbles to check for leaks. Add a trace of refrigerant to the system (if using an electronic leak detector), and then raise the pressure using nitrogen gas (140 PSIG). DO NOT use R-404A as a mixture with pressurized air for leak testing.
10) Evacuate the system, and charge it with refrigerant. For air-cooled and water-cooled models, see the nameplate for the required refrigerant charge. For remote air-cooled models, see the rating label inside the icemaker.
11) Cut the leads of the solenoid allowing enough lead length to reconnect using closed end connectors.
12) Connect the new solenoid leads.
13) Attach the solenoid to the valve body and secure it with the screw.
14) Replace the panels in their correct positions.
15) Turn on the power supply.

E. Removal and Replacement of Evaporator

IMPORTANT

Always install a new drier every time the sealed refrigeration system is opened. Do not replace the drier until after all other repairs or replacement have been made.

1) Turn off the power supply.
2) Remove the panels and the front and top insulation.
3) Recover the refrigerant and store it in an approved container.
4) Remove the spray tubes. Remove the insulation at the "U" shaped notch where the refrigeration tubing passes through the molded chassis.
5) Disconnect the evaporator tubing.
6) Remove the pop rivets securing the evaporator, then lift out the evaporator.
7) Install the new evaporator.
8) Remove the drier, then place the new drier in position.
9) Braze all fittings while purging with nitrogen gas flowing at a pressure of 3 to 4 PSIG.
10) Use an electronic leak detector or soap bubbles to check for leaks. Add a trace of refrigerant to the system (if using an electronic leak detector), and then raise the pressure using nitrogen gas (140 PSIG). DO NOT use R-404A as a mixture with pressurized air for leak testing.
11) Evacuate the system, and charge it with refrigerant. For air-cooled and water-cooled models, see the nameplate for the required refrigerant charge. For remote air-cooled models, see the rating label inside the icemaker.
12) Replace the removed parts in the reverse order of which they were removed.
13) Replace the insulation and the panels in their correct positions.
14) Turn on the power supply.

F. Removal and Replacement of Water Regulating Valve

-Water-Cooled Model Only

IMPORTANT

Always install a new drier every time the sealed refrigeration system is opened. Do not replace the drier until after all other repair or replacement has been made.

1) Turn off the power supply.
2) Remove the panels.
3) Close the condenser water supply line shut-off valve, then open the condenser water supply line drain valve.

4) Attach a compressed air or carbon dioxide supply to the condenser water supply line drain valve.

5) Open the water regulating valve by using a screwdriver to pry up on the spring retainer underneath the spring. While holding the valve open, blow out the condenser using the compressed air or carbon dioxide supply until water stops coming out.

6) Recover the refrigerant and store it in an approved container.

7) Disconnect the capillary tube at the condenser outlet.

8) Disconnect the flare-connections of the valve.

9) Remove the screws and the valve from the bracket.

10) Install the new valve.

11) Remove the drier, then place the new drier in position.

12) Braze all fittings while purging with nitrogen gas flowing at a pressure of 3 to 4 PSIG.

13) Use an electronic leak detector or soap bubbles to check for leaks. Add a trace of refrigerant to the system (if using an electronic leak detector), and then raise the pressure using nitrogen gas (140 PSIG). DO NOT use R-404A as a mixture with pressurized air for leak testing.

14) Evacuate the system, and charge it with refrigerant. See the nameplate for the required refrigerant charge.

15) Connect the flare-connections.

16) Close the condenser water supply line drain valve, then open the condenser water supply line shut-off valve.

17) Check for water leaks.

18) Replace the panels in their correct positions.

19) Turn on the power supply.

G. Adjustment of Water Regulating Valve - Water-Cooled Model Only

The water regulating valve (also called "water regulator") is factory-adjusted. No adjustment is required under normal use. Adjust the water regulator, if necessary, using the following procedures.

1) Prepare a thermometer to check the condenser drain temperature. Attach a pressure gauge to the high-side line of the system.

2) Five minutes after a freeze cycle starts, confirm that the thermometer reads 104°F to 115°F (40°C to 46°C). If it does not, rotate the adjustment screw by using a flat blade screwdriver until the temperature is in the proper range. See Fig. 1. Next, check that the reference pressure is in the range indicated in the Head Pressure table in the Performance Data section. If it is not in the proper range, verify the refrigerant charge.

3) Check that the condenser drain temperature is stable.

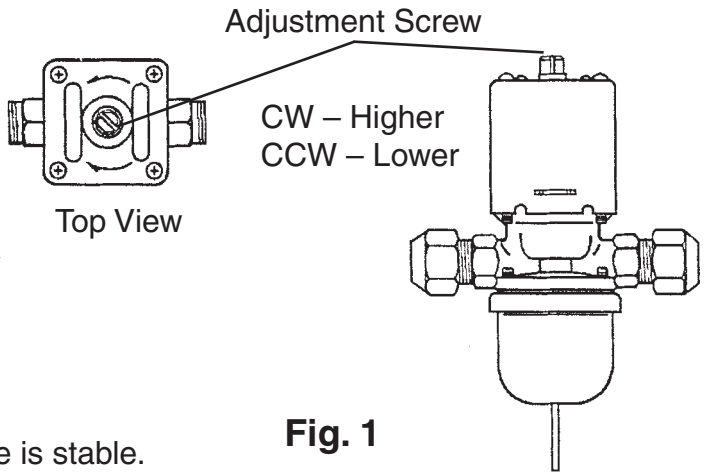

Fig. 1

H. Removal and Replacement of Headmaster (Condensing Pressure Regulator - C.P.R.) - Remote Air-Cooled Model Only

IMPORTANT

Always install a new drier every time the sealed refrigeration system is opened. Do not replace the drier until after all other repair or replacement has been made.

1) Turn off the power supply.
2) Remove the panels from the remote condenser unit.
3) Recover the refrigerant and store it in an approved container.
4) Before heating, break off the stub on the dome to release the dome charge.
5) Disconnect the headmaster.
6) Place the new headmaster in position.
7) Remove the drier, then place the new drier in position.
8) Braze all fittings with nitrogen gas flowing at a pressure of 3 to 4 PSIG.

CAUTION

Always protect the headmaster body by using a damp cloth to prevent it from overheating. Do not braze with the headmaster body exceeding 250°F (121°C).

9) Use an electronic leak detector or soap bubbles to check for leaks. Add a trace of refrigerant to the system (if using an electronic leak detector), and then raise the pressure using nitrogen gas (140 PSIG). DO NOT use R-404A as a mixture with pressurized air for leak testing.
10) Evacuate the system and charge it with refrigerant. See the rating label inside the icemaker, for the required refrigerant charge.
11) Replace the panels in their correct positions.
12) Turn on the power supply.

I. Removal and Replacement of Thermistor

IMPORTANT

1. Fragile, handle very carefully.
2. Always use the recommended sealant (high thermal conductive type), Model KE4560RTV manufactured by SHINETSU SILICONE, Part Code 60Y000-11, or Part Code 4A0683-01 or equivalent.
3. Always use the recommended foam insulation (non-absorbent type) or equivalent.
4. Do not shorten or cut the thermistor leads.

1) Turn off the power supply.
2) Remove the panels.
3) Remove the control box cover.
4) Disconnect the thermistor leads from the K3 connector on the control board.
5) Remove the plastic cable ties, foam insulation, thermistor holder and thermistor. See Fig. 2.
6) Scrape away the old sealant on the thermistor holder and the suction pipe.
7) Wipe off moisture or condensation on the suction pipe.

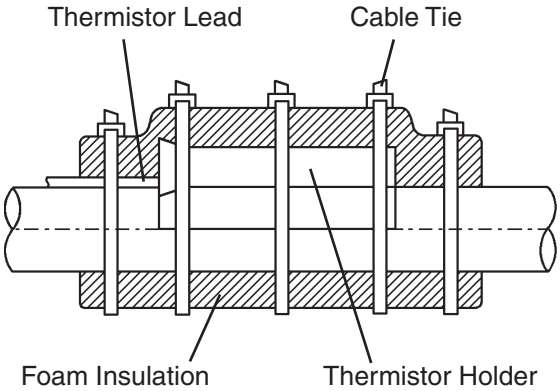

Fig. 2

8) Smoothly apply recommended sealant (KE4560RTV, Part Code 60Y000-11 or 4A0683-01) to the thermistor holder concave.
9) Attach the new thermistor to the suction pipe in the same position as the previous thermistor. Be very careful to prevent damage to the leads. Secure it using the thermistor holder and recommended foam insulation.
10) Secure the insulation using the plastic cable ties.
11) Connect the thermistor leads through the bushing of the control box to the K3 connector on the control board.
    Note: Do not shorten or cut the thermistor leads.
12) Replace the control box cover and the panels in their correct positions.
13) Turn on the power supply.

J. Removal and Replacement of Fan Motor

Note: When replacing a fan motor with defective winding, it is recommended that a new capacitor be installed.

1) Turn off the power supply.
2) Remove the panels.
3) Remove the junction box cover from the remote condenser unit (remote air-cooled model).
4) Disconnect the fan motor wires.
5) Remove the fan motor bracket and fan motor.
6) Install the new fan motor, connect the fan motor wires, and replace the removed parts in the reverse order of which they were removed.
7) Replace the panels in their correct positions.
8) Replace the junction box cover in its correct position (remote air-cooled model).
9) Turn on the power supply.

K. Removal and Replacement of Inlet Water Valve

1) Turn off the power supply.
2) Close the icemaker water supply line shut-off valve. Open the icemaker water supply line drain valve.
3) Remove the front panel.
4) Disconnect the valve outlet tubing by releasing the clamp.
5) Loosen the fitting nut. Be careful not to lose the washer.
6) Disconnect the terminals from the valve.
7) Remove the bracket and valve from the unit.
8) Install the new valve. Replace the removed parts in the reverse order of which they were removed. Make sure the washer is in place in the fitting nut.
9) Close the icemaker water supply line drain valve. Open the icemaker water supply line shut-off valve.
10) Turn on the power supply.
11) Check for leaks.
12) Replace the front panel in its correct position.

L. Removal and Replacement of Pump Motor

1) Turn off the power supply.
2) Remove the front panel.
3) Remove the base cover.
4) Drain the water tank by removing one end of the pump tubing. See Fig. 3.
5) Disconnect the pump suction and discharge hoses.
6) Remove the closed end connectors from the pump motor leads.
7) Remove the screw attaching the pump motor assembly to the base, then remove the pump motor assembly.
8) Remove the screw attaching the pump motor to the pump motor bracket.
9) Remove the screws attaching the pump housing to the pump motor. Remove the housing and check the impeller.
10) If the impeller is defective, install a new impeller.
11) Install the new motor or new parts, and replace the removed parts in the reverse order of which they were removed. Be sure to reattach the green ground wire.
12) Turn on the power supply and check for leaks.
13) Replace the base cover in its correct position.
14) Replace the front panel in its correct position.

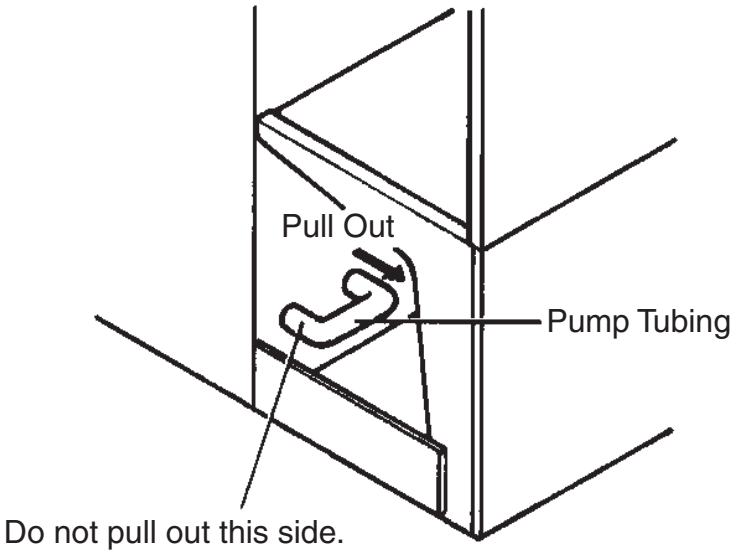

Fig. 3

VI. Cleaning and Maintenance

IMPORTANT

Ensure all components, fasteners, and thumbscrews are securely in place after any cleaning or maintenance is done to the equipment.

A. Cleaning and Sanitizing Instructions

HOSHIZAKI recommends cleaning this icemaker at least once a year. More frequent cleaning, however, may be required in some existing water conditions.

WARNING

1. To prevent injury to individuals and damage to the icemaker, do not use ammonia type cleaners.
2. Always wear liquid-proof gloves to prevent the cleaning and sanitizing solutions from coming into contact with skin.
3. Carefully follow any instructions provided with the bottles of cleaning and sanitizing solution.
4. Never run the icemaker when the water tank is empty.

IMPORTANT

1. The cleaning valve is used to allow solution flow to the inside of the evaporator during the cleaning and sanitizing operation. It should be closed for all icemaking operation. The compressor will not operate unless this valve is completely closed.
2. To open the cleaning valve, the valve handle should be parallel to the valve body. To close the valve, the valve handle should be at a right angle to the valve body.

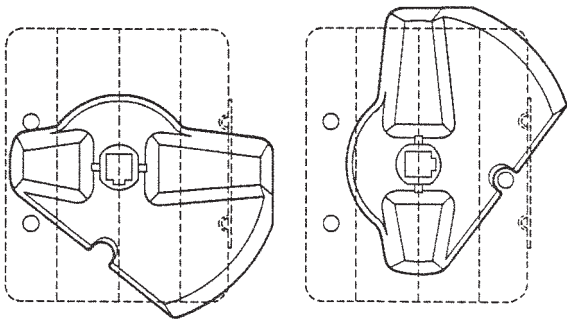

Closed Position Open Position

1. Cleaning Procedure

1) Dilute 16 fl. oz. (473 ml) of Hoshizaki "Scale Away" with 3 gal. (11 l) of warm water.
2) Remove all ice from the evaporator and the storage bin.
   Note: To remove cubes on the evaporator, turn off the power supply and turn it back on after 3 minutes. The harvest cycle starts and the cubes will be removed from the evaporator.
3) Turn off the power supply.
4) Remove the front panel and the base cover, and then remove the insulation panel by lifting up the panel slightly and pulling it towards you.
5) Remove one end of the pump tubing. See Fig. 4. Drain the water tank. Replace the pump tubing in its correct position.

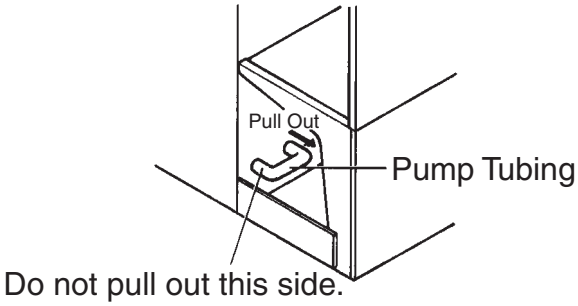

Fig. 4

6) In bad or severe water conditions, clean the float switch assembly as described below. Otherwise, continue to step 7.
   a. Disconnect the vent tube and the flush tube from the top of the float switch, then remove the float switch and rubber boot.
   b. Remove the retainer rod from the bottom of the float switch assembly, then remove the float. Be careful not to bend the retainer rod excessively when removing it.
   c. Wipe down the float switch assembly's housing, shaft, float, and retainer rod with cleaning solution. Clean the inside of the rubber boot and hose with cleaning solution. Rinse the parts thoroughly with clean water.
   d. Reassemble the float switch assembly and replace it and the rubber boot in their correct positions. Reconnect the vent tube and the flush tube.
7) Pour the cleaning solution into the water tank.
8) Fully open the cleaning valve on the left side wall of the machine compartment.
9) Move the control switch on the control box to the "WASH" position.
10) Replace the insulation panel and the front panel in their correct positions.
11) Turn on the power supply to start the washing process.
12) Turn off the power supply after 30 minutes.
13) Remove the front panel.
14) Remove one end of the pump tubing. Drain the water tank. Replace the pump tubing in its correct position.
15) Move the control switch to the "ICE" position.
16) Close the cleaning valve.
    Note: The icemaker will not operate unless the cleaning valve is completely closed.
17) Replace the front panel in its correct position.
18) Turn on the power supply to fill the water tank with water.
19) Turn off the power supply after 3 minutes.

20) Remove the front panel and fully open the cleaning valve.

21) Move the control switch to the "WASH" position.

22) Replace the front panel in its correct position.

23) Turn on the power supply to rinse off the cleaning solution.

24) Turn off the power supply after 5 minutes.

25) Remove the front panel.

26) Remove one end of the pump tubing. Drain the water tank. Replace the pump tubing in its correct position.

27) Repeat steps 15 through 26 three more times to rinse thoroughly.
Note: If you do not sanitize the icemaker, go to step 10 in "2. Sanitizing Procedure."

2. Sanitizing Procedure - Following Cleaning Procedure

1) Dilute a 5.25% sodium hypochlorite solution (chlorine bleach) with warm water. (Add 1.5 fl. oz. (44 ml) of sanitizer to 3 gal. (11 l) of water.)

2) Remove the insulation panel.

3) Pour the sanitizing solution into the water tank.

4) Replace the insulation panel and the front panel in their correct positions.
Note: Make sure that the control switch is in the "WASH" position and the cleaning valve is open.

5) Turn on the power supply to start the sanitizing process.

6) Turn off the power supply after 15 minutes.

7) Remove the front panel.

8) Remove one end of the pump tubing. Drain the water tank. Replace the pump tubing in its correct position.

9) Repeat steps 15 through 26 in "1. Cleaning Procedure" two times to rinse thoroughly.

10) Close the cleaning valve.

11) Move the control switch to the "ICE" position.

12) Replace the front panel and the base cover in their correct positions.

13) Clean the storage bin using a neutral cleaner. Rinse thoroughly after cleaning.

14) Turn on the power supply to start the automatic icemaking process.

B. Maintenance

IMPORTANT

This icemaker must be maintained individually, referring to the instruction manual and labels provided with the icemaker.

1. Stainless Steel Exterior

To prevent corrosion, wipe the exterior occasionally with a clean, soft cloth. Use a damp cloth containing a neutral cleaner to wipe off oil or dirt build up.

2. Storage Bin and Scoop

- Wash your hands before removing ice. Use the plastic scoop provided (bin accessory).
- The storage bin is for ice use only. Do not store anything else in the storage bin.
- Clean the scoop and the storage bin liner using a neutral cleaner. Rinse thoroughly after cleaning.

3. Air Filters (air-cooled model only)

Plastic mesh air filters remove dirt and dust from the air, and keep the condenser from getting clogged. As the filters get clogged, the icemaker's performance will be reduced. Check the filters at least twice a month. When they are clogged, use warm water and a neutral cleaner to wash the filters.

4. Condenser (air-cooled and remote air-cooled models only)

Check the condenser once a year, and clean the coil if required by using a brush or vacuum cleaner. More frequent cleaning may be required depending on location.

C. Preparing the Icemaker for Long Storage

CAUTION

When shutting off the icemaker for an extended time, drain out all water from the water tank and remove the ice from the storage bin. The storage bin should be cleaned and dried. Drain the icemaker to prevent damage to the water supply line at sub-freezing temperatures, using air or carbon dioxide. Shut off the icemaker until the proper ambient temperature is resumed.

When the icemaker is not used for two or three days, it is sufficient to only move the control switch to the "OFF" position, unless the icemaker will be at sub-freezing temperatures.

1. On water-cooled model only, first remove the water from the water-cooled condenser:

1) Turn off the power supply and remove the front panel and right side panel.
2) Close the condenser water supply line shut-off valve.
3) Open the condenser water supply line drain valve.
4) Attach a compressed air or carbon dioxide supply to the condenser water supply line drain valve.

5) Open the water regulating valve by using a screwdriver to pry up on the spring retainer underneath the spring. While holding the valve open, blow out the condenser using the compressed air or carbon dioxide supply until water stops coming out.

6) Close the condenser water supply line drain valve and replace the right side panel in its correct position.

2. Remove the water from the icemaker water supply line:

1) If you have not already done so, turn off the power supply and remove the front panel.

2) Close the icemaker water supply line shut-off valve and open the icemaker water supply line drain valve.

3) Allow the line to drain by gravity.

4) Attach a compressed air or carbon dioxide supply to the icemaker water supply line drain valve.

5) Make sure at least 3 minutes have elapsed since you turned off the power supply. Make sure the control switch is in the "ICE" position. Replace the front panel in its correct position and turn on the power supply.

6) Blow the icemaker water supply line out using the compressed air or carbon dioxide supply.

7) Close the icemaker water supply line drain valve.

3. Drain the water tank:

1) Turn off the power supply and remove the front panel.

2) Move the control switch to the "OFF" position.

3) Remove the base cover.

4) Remove one end of the pump tubing. Drain the water tank. Replace the pump tubing in its correct position. See Fig. 5

5) Remove all ice from the storage bin. Clean the storage bin using a neutral cleaner. Rinse thoroughly after cleaning.

6) Replace the front panel in its correct position.

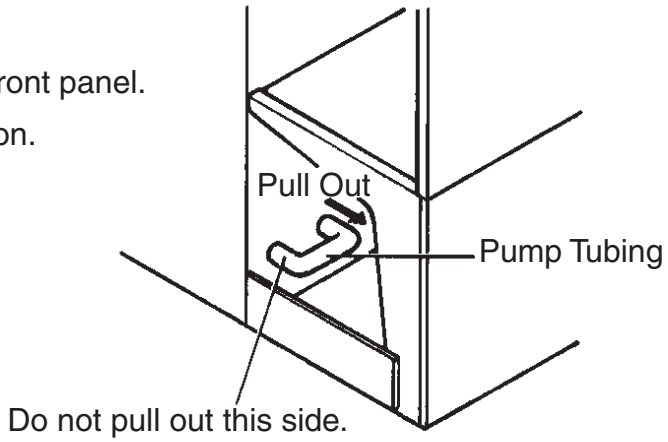

Fig. 5