HOSHIZAKI

Service Manual

Stackable Square Cuber

Models
IM-500SAA

hoshizakiamerica.com

Number: M029-897
Issued: 2-8-2013
Revised: 5-23-2025

⚠ WARNING

Only qualified service technicians should install and service the icemaker. To obtain the name and phone number of your local Hoshizaki Certified Service Representative, visit www.hoshizakiamerica.com. No service should be undertaken until the technician has thoroughly read this Service Manual. Failure to service and maintain the appliance in accordance with this manual will adversely affect safety, performance, component life, and warranty coverage and may result in costly water damage. Proper installation is the responsibility of the installer. Product failure or property damage due to improper installation is not covered under warranty.

Hoshizaki provides this manual primarily to assist qualified service technicians in the maintenance and service of the product.

Should the reader have any questions or concerns which have not been satisfactorily addressed, please call, write, or send an e-mail message to the Hoshizaki Technical Support Department for assistance.

Phone: 1-800-233-1940; (770) 487-2331

E-mail: tech-support@hoshizaki.com

HOSHIZAKI AMERICA, INC.
618 Highway 74 South
Peachtree City, GA 30269
Attn: Hoshizaki Technical Support Department

Web Site: www.hoshizakiamerica.com

NOTE: To expedite assistance, all correspondence/communication MUST include the following information:

- Model Number _____
- Serial Number _____
- Complete and detailed explanation of the problem..

IMPORTANT
This manual should be read carefully before the appliance is serviced. Read the warnings and guidelines contained in this manual carefully as they provide essential information for the continued safe use, service, and maintenance of the appliance. Retain this manual for any further reference that may be necessary.

CONTENTS

Important Safety Information 4
I. Construction and Water/Refrigeration Circuit Diagram 6
A. Construction 6
B. Water/Refrigeration Circuit Diagram 7
II. Sequence of Operation and Service Diagnosis 8
A. Sequence of Operation Flow Chart 8
B. Sequence of Operation 9
1. Startup Cycle 9
2. Harvest Cycle 9
3. Freeze Cycle 9
4. Shutdown 10
C. Service Diagnosis Table 11
D. Bin Control Check and Cleaning 14
1. Bin Control Check 14
2. Bin Control Cleaning 15
E. Evaporator Thermistor Check 16
III. Controls and Adjustments 17
A. Control Switch 17
B. Control Board 17
1. Control Board Layout 18
C. Control Buttons 19
D. Control Board Settings 20
E. Control Board Information Display 23
F. Control Board Model Code Setting 25
1. Control Board Replacement 25
2. Checking or Changing the Control Board Model Code 25
G. Error Codes 27
H. Quick Adjustments 28
1. Dimple Diameter 28
2. Ice Clarity 29
IV. Refrigeration Circuit and Component Service Information 30
A. Refrigeration Circuit Service Information 30
B. Component Service Information 32
V. Maintenance 34
VI. Preparing the Icemaker for Periods of Non-Use 35
VII. Disposal 36
VIII. Technical Information 37
A. Specification Data 37
B. Performance Data 38
C. Wiring Diagrams 39

Important Safety Information

Throughout this manual, notices appear to bring your attention to situations which could result in death, serious injury, damage to the appliance, or damage to property.

⚠ WARNING **Indicates a hazardous situation which could result in death or serious injury.**

NOTICE **Indicates a situation which could result in damage to the appliance or property.**

IMPORTANT **Indicates important information about the use and care of the appliance.**

⚠ WARNING

The appliance should be destined only to the use for which it has been expressly conceived. Any other use should be considered improper and therefore dangerous. The manufacturer cannot be held responsible for injury or damage resulting from improper, incorrect, and unreasonable use. Failure to service and maintain the appliance in accordance with this manual will adversely affect safety, performance, component life, and warranty coverage and may result in costly water damage.

To reduce the risk of death, electric shock, serious injury, or fire, follow basic precautions including the following:

- Only qualified service technicians should install and service this appliance.
- The appliance must be installed in accordance with applicable national, state, and local codes and regulations. Failure to meet these code requirements could result in death, electric shock, serious injury, fire, or damage to the appliance.
- Electrical connection must be hard-wired and must meet national, state, and local electrical code requirements. Failure to meet these code requirements could result in death, electric shock, serious injury, fire, or damage.
- The icemaker requires an independent power supply of proper capacity. See the nameplate for electrical specifications. Failure to use an independent power supply of proper capacity can result in a tripped breaker, blown fuse, damage to existing wiring, or component failure. This could lead to heat generation or fire.
- **THE ICEMAKER MUST BE GROUNDED.** Failure to properly ground the icemaker could result in death or serious injury.
- To reduce the risk of electric shock, do not touch the control switch with damp hands.
- Move the control switch to the "OFF" position and turn off the power supply before servicing. Lockout/Tagout to prevent the power supply from being turned back on inadvertently.
- Do not make any alterations to the appliance. Alterations could result in electric shock, serious injury, fire, or damage.

⚠ WARNING, continued

- The appliance is not intended for use by persons (including children) with reduced physical, sensory, or mental capabilities, or lack of experience and knowledge, unless they have been given supervision or instruction concerning use of the appliance by a person responsible for their safety.
- Children should be properly supervised around the appliance.
- Do not climb, stand, or hang on the appliance or allow children or animals to do so. Serious injury could occur or the appliance could be damaged.
- Do not use combustible spray or place volatile or flammable substances near the appliance. They might catch fire.
- Keep the area around the appliance clean. Dirt, dust, or insects in the appliance could cause harm to individuals or damage to the appliance.

NOTICE

- Follow the instructions in this manual carefully to reduce the risk of costly water damage.
- In areas where water damage is a concern, install in a contained area with a floor drain.
- Install the appliance in a location that stays above freezing. Normal operating ambient temperature must be within 45°F to 100°F (7°C to 38°C).
- Do not leave the appliance on during extended periods of non-use, extended absences, or in sub-freezing temperatures. To properly prepare the appliance for these occasions, follow the instructions in "VI. Preparing the Icemaker for Periods of Non-Use."
- Do not place objects on top of the appliance.
- The dispenser unit/ice storage bin is for ice use only. Do not store anything else in the dispenser unit/ice storage bin.

I. Construction and Water/Refrigeration Circuit Diagram

A. Construction

1. Air-Cooled Model (SAA)

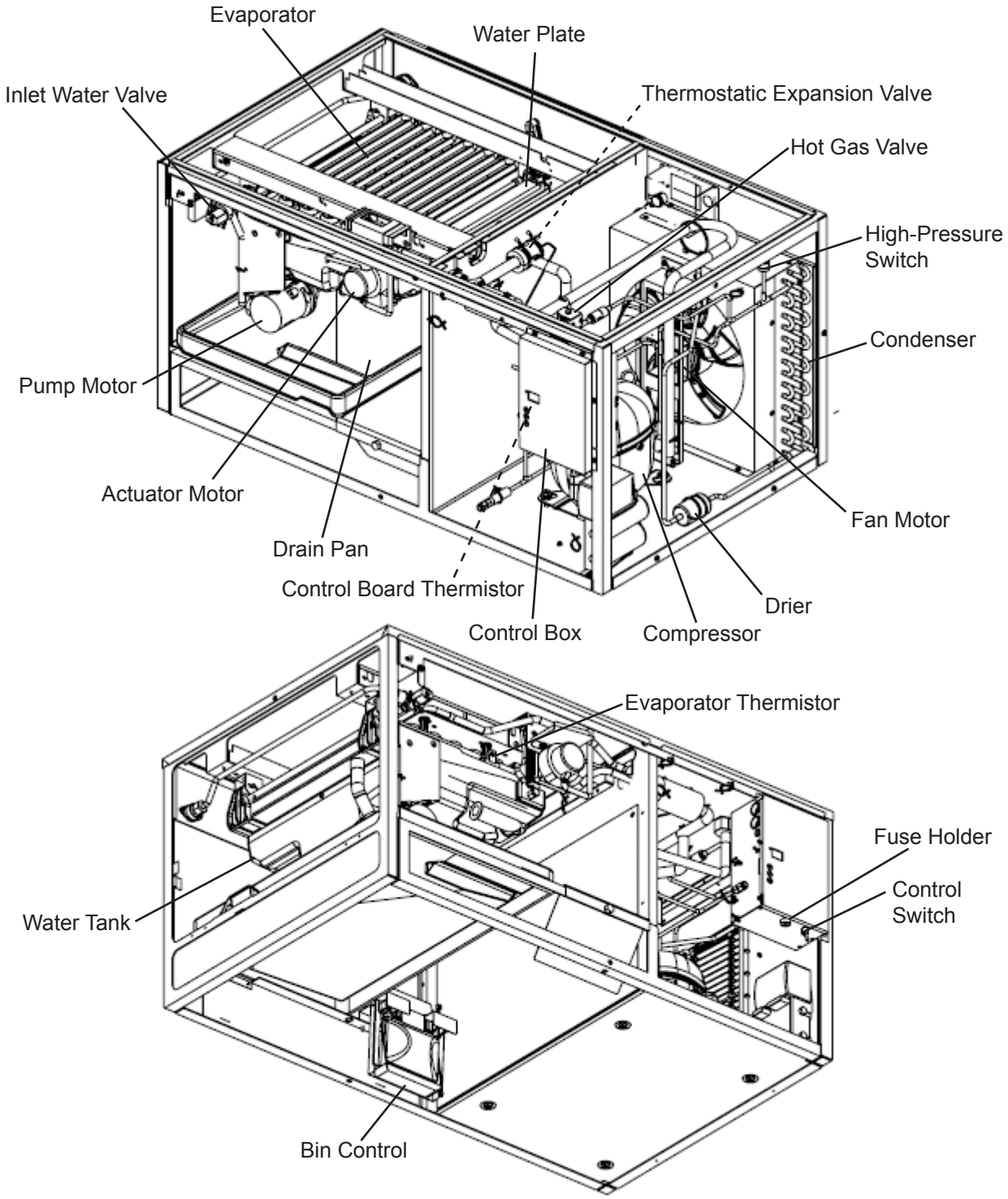

Model Shown: IM-500SAA

B. Water/Refrigeration Circuit Diagram

1. Air-Cooled Model (SAA)

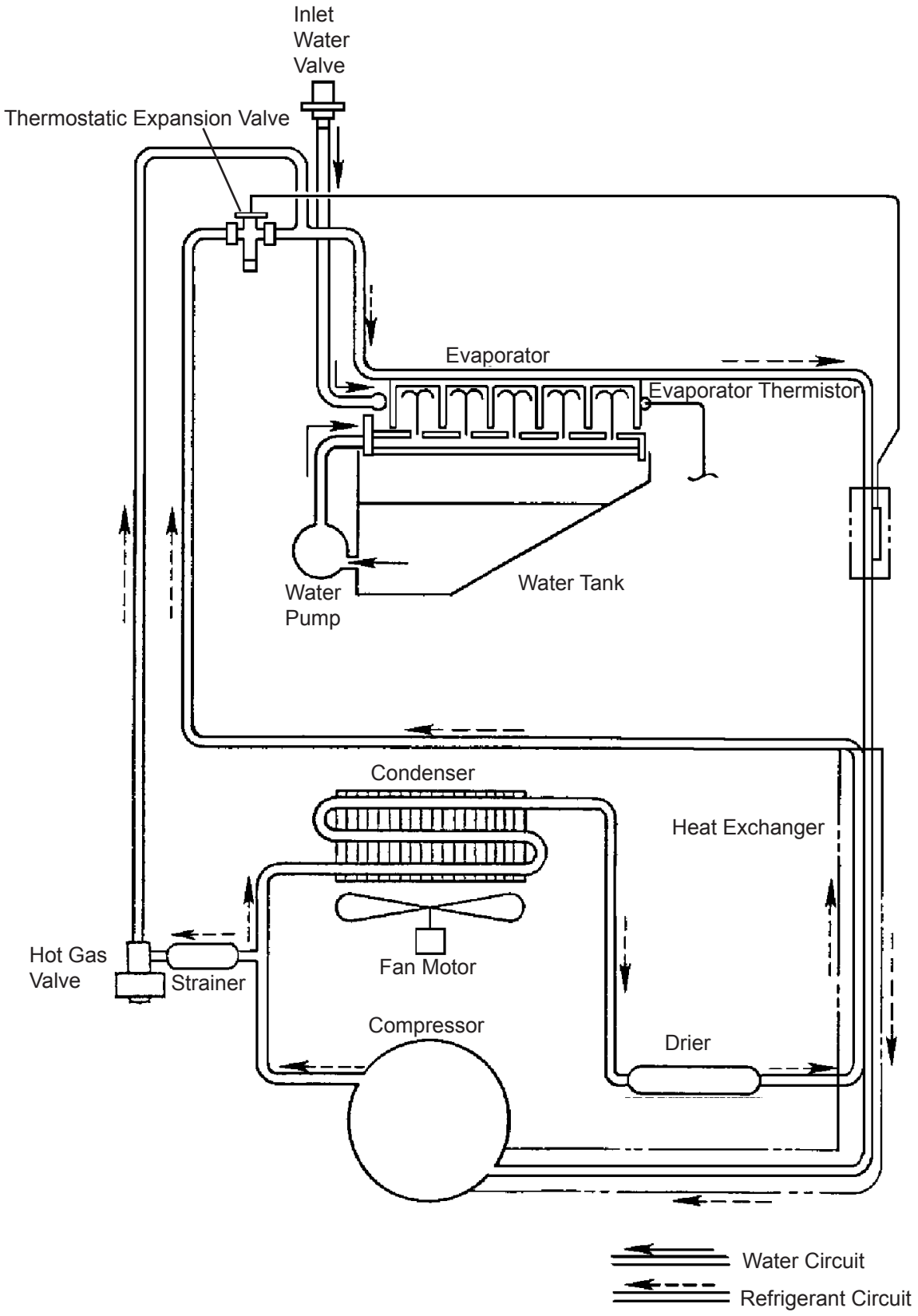

II. Sequence of Operation and Service Diagnosis

A. Sequence of Operation Flow Chart

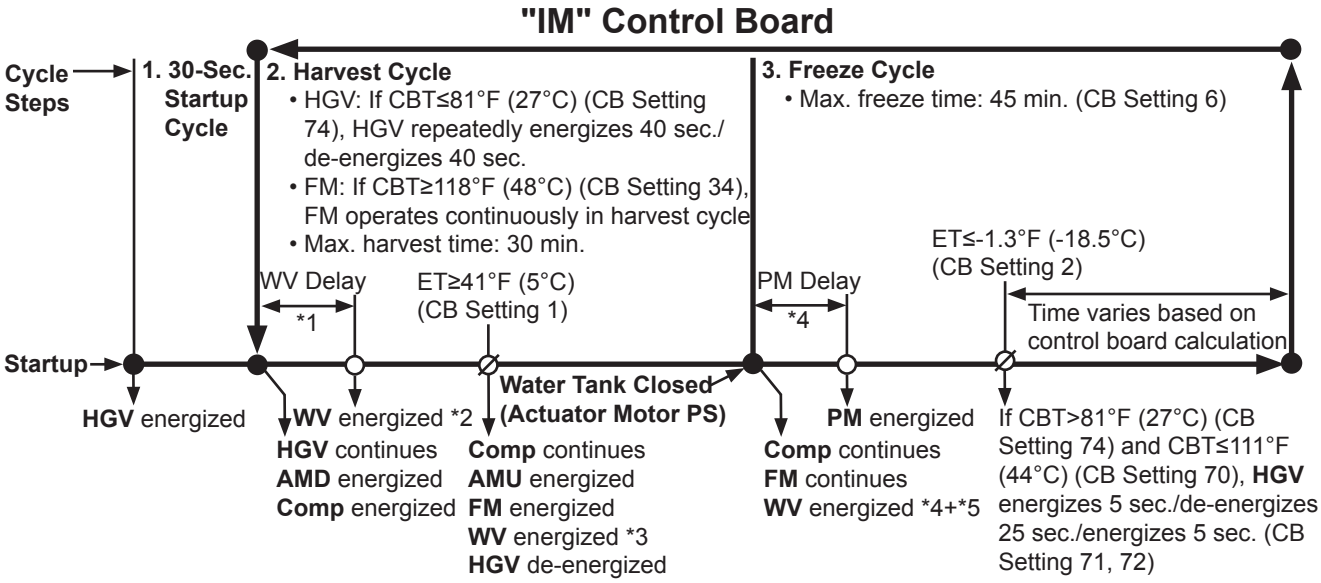

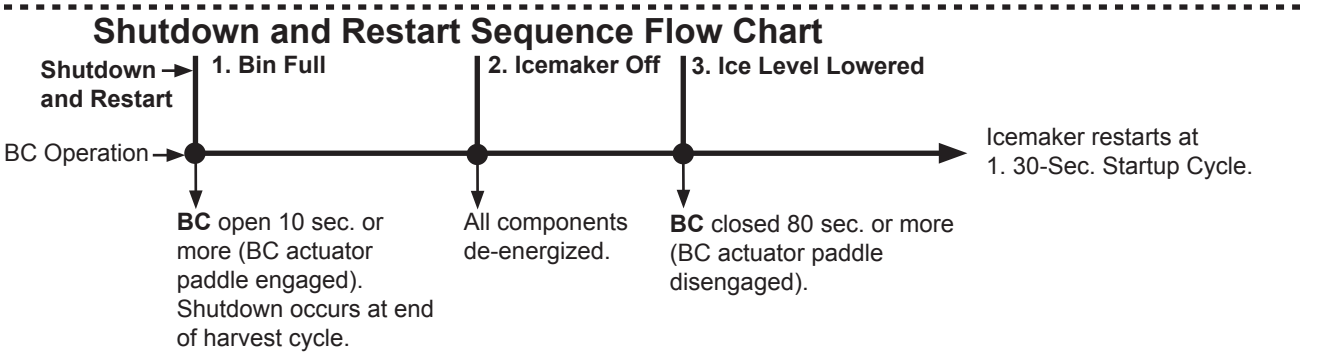

Note	CB Setting	Initial Harvest and Initial Freeze after Power On	Initial Harvest and Initial Freeze after Bin Control Initiated Restart		Normal Harvest and Freeze	
		All WT	WT>48°F (9°C)	WT≤48°F (9°C)	WT>48°F (9°C)	WT≤48°F (9°C)
*1	NA	20 sec.	0 sec.	0 sec.	20 sec.	20 sec.
*2	10, 11	95 sec.	10 sec. (CB Setting NA)	95 sec.	30 sec.	95 sec.
*3	NA	10 sec.	0 sec.	10 sec.	0 sec.	10 sec.
PD*4	12	30 sec. × 2	30 sec. × 2	30 sec. × 2	30 sec.	30 sec.
PD*5	15	22 sec. × 2	22 sec. × 2	22 sec. × 2	22 sec.	22 sec.
FD*4	12	60 sec.	60 sec.	60 sec.	60 sec.	60 sec.
FD*5	15	44 sec.	44 sec.	44 sec.	44 sec.	44 sec.

Legend:
AMD–actuator motor down
AMU–actuator motor up
BC–bin control
CBT–control board thermistor
Comp–compressor
ET–evaporator thermistor
FD–full drain (CB Setting 14)
FM–fan motor
HGV–hot gas valve
PD–partial drain (CB Setting 14)
PM–pump motor
PS–position sensor
WT–water temperature
WV–inlet water valve

B. Sequence of Operation

1. Startup Cycle

When power supply is turned on, "on" appears on CB display and HGV energizes. 30 sec. later, harvest cycle starts.

- If the "RESET" button is pressed during 30-sec. startup cycle time, startup cycle ends immediately and harvest cycle starts.

2. Harvest Cycle

HGV continues. Comp and AMD energize. WV energizes as listed in table below.

Note	CB Setting	Initial Harvest after Power On	Initial Harvest after Bin Control Initiated Restart		Normal Harvest	
		All WT	WT>48°F (9°C)	WT≤48°F (9°C)	WT>48°F (9°C)	WT≤48°F (9°C)
WV Delay	NA	20 sec.	0 sec.	0 sec.	20 sec.	20 sec.
WV Time after WV Delay	10, 11	95 sec.	10 sec. (CB Setting NA)	95 sec.	30 sec.	95 sec.
WV Time when ET≥41°F (5°C) (CB Setting 1)	NA	10 sec.	0 sec.	10 sec.	0 sec.	10 sec.

Note: ET temperature is recorded 30 seconds after PM energizes in the preceding freeze cycle. Water temperature correction value (CB Setting 13) is added to ET temperature and this is used as WT value.

If CBT≤81°F (27°C) (CB Setting 74) at beginning of harvest cycle, HGV repeatedly energizes 40 sec./de-energizes 40 sec. If CBT≥118°F (48°C) (CB Setting 34) at beginning of harvest cycle, FM operates continuously in harvest cycle.
When ET reaches harvest cycle termination temperature (CB Setting 1) of 41°F (5°C) , HGV de-energizes, FM and AMU energize. Comp continues. WV energizes as listed in table above. Harvest cycle is complete when actuator motor PS indicates water tank is fully closed.

3. Freeze Cycle

Comp and FM continue. WV energizes for total time of WV Time 1 and WV Time 2 listed in table below. PM energizes after PM delay listed in table below.

Note	CB Setting	Initial Freeze after Power On	Initial Freeze after Bin Control Initiated Restart	Normal Freeze
		All WT	All WT	All WT
PD WV Time 1 and PM Delay	12	30 sec. × 2	30 sec. × 2	30 sec.
PD WV Time 2	15	22 sec. × 2	22 sec. × 2	22 sec.
FD WV Time 1 and PM Delay	12	60 sec.	60 sec.	60 sec.
FD WV Time 2	15	44 sec.	44 sec.	44 sec.

ET temperature is recorded 30 seconds after PM energizes. Water temperature correction value (CB Setting 13) is added to ET temperature and this is used as WT value in following harvest cycle.

If CBT>81°F (27°C) (CB Setting 74) and CBT≤111°F (44°C) (CB Setting 70), when ET≤-1.3°F (-18.5°C) (CB Setting 2), HGV energizes 5 sec., de-energizes 25 sec., energizes 5 sec. (CB Settings 71 and 72) to reduce bonding of the water tank to the evaporator.

CB monitors time after ET temperature≤32°F (0°C). CB terminates freeze cycle when the following equation is satisfied:

temp. (absolute value) × time (min.) = (absolute value of CB Setting 2) × (CB Setting 3)

Using default settings, freeze cycle is terminated when:

temp. (absolute value) × time (min.) = 185

This formula helps maintain consistent dimple size regardless of differences in seasonal ambient and water temperatures.

4. Shutdown

When BC is engaged (open) for more than 10 seconds, the icemaker shuts down after harvest cycle.

When BC is disengaged (closed) for more than 80 seconds, icemaker restarts at startup cycle.

If BC is engaged (open) while the water tank is opening after the power supply is turned on (or after the "RESET" button is pressed), shutdown does not start: Shutdown occurs 10 seconds after actuator motor's internal position sensor indicates water tank is fully open.

Legend: **AMD**–actuator motor down; **AMU**–actuator motor up; **BC**–bin control; **CB**–control board; **CBT**–control board thermistor; **Comp**–compressor; **ET**–evaporator thermistor; **FD**–full drain (CB Setting 14); **FM**–fan motor; **HGV**–hot gas valve; **PM**–pump motor; **PD**–partial drain (CB Setting 14); **PS**–position sensor; **WT**–water temperature; **WV**–inlet water valve

C. Service Diagnosis Table

First see "III.G. Error Codes." If there are no recorded errors, refer to the table below.

No Ice Production - Possible Cause	
1. Power Supply	a) Off, blown fuse, or tripped breaker.
	b) Not within specifications.
2. Fuse (Control Box)	a) Blown.
3. Control Switch	a) In "OFF" or "WASH" position.
	b) Bad contacts.
4. High-Pressure Switch	a) Dirty condenser or air filter.
	b) Fan motor not operating.
	c) Refrigerant overcharged.
	d) Bad contacts.
	e) Refrigerant lines or components restricted.
5. Control Transformer (115VAC/10.5VAC)	a) Coil winding open or shorted.
6. Control Board	a) Error. See "III.G. Error Codes."
	b) Defective.
7. Bin Control See "II.D. Bin Control Check and Cleaning"	a) Tripped with bin filled with ice.
	b) Actuator does not move freely.
	c) Defective.
8. Water Supply	a) Water supply off or improper water pressure.
	b) External water filters restricted.
9. Inlet Water Valve	a) Screen or orifice restricted.
	b) Coil winding open.
10. Compressor	a) Compressor relay/magnetic contactor contacts bad or coil winding open.
	b) Start capacitor or run capacitor defective (single phase).
	c) Internal protector open.
	d) Start relay contacts bad or coil winding open (single phase).
	e) Defective.
11. Hot Gas Valve	a) Defective.
12. Evaporator (Cube Control) Thermistor See "II.E. Evaporator Thermistor Check"	a) Loose, disconnected, or defective.
13. Pump Motor	a) Mechanical seal worn out.
	b) Defective.
	c) Defective capacitor.
14. Thermostatic Expansion Valve	a) Bulb loose.
	b) Defective.
15. Fan Motor	a) Defective.
	b) Defective capacitor.
16. Water System	a) Water leaks.

Low Ice Production - Possible Cause	
Long Harvest Cycle	
1. Evaporator	a) Scaled up.
2. Refrigerant Charge	a) Low.
3. Control Board	a) Thermistor connection loose (K3).
	b) Defective.
4. Evaporator (Cube Control) Thermistor See "II.E. Evaporator Thermistor Check"	a) Loose, disconnected, or defective.
5. Hot Gas Valve	a) Erratic or closed.
6. Compressor	a) Inefficient or off.
7. Thermostatic Expansion Valve	a) Defective.
Long Freeze Cycle	
1. Evaporator	a) Scaled up, dirty.
2. Hot Gas Valve	a) Defective.
3. Condenser	a) Restricted.
4. Control Board	a) Defective.
5. Refrigerant Charge	a) Low.
6. Thermostatic Expansion Valve	a) Bulb loose.
	b) Defective.
7. Compressor	a) Inefficient or off.
Slab Does Not Break Into Separate Cubes - Possible Cause	
1. Spring	a) Over-extended.
2. Water Plate	a) Obstacle caught between evaporator and water plate.
Cubes Drop Separately - Possible Cause	
1. Refrigerant Charge	a) Low - Long harvest cycle.
2. Cam Arm	a) Worn out.
Imperfect Ice Production - Possible Cause	
1. Water Supply	a) Improper water pressure.
	b) External water filters restricted.
	c) Water leaks from water tank or water plate due to broken tank or plate or icemaker out of level.
2. Inlet Water Valve	a) Water leaks from valve body or water supply pipe joint.
3. Water Plate	a) Spray holes restricted.
4. Pump Motor	a) Defective.
Large-Hole Cubes - Possible Cause (Also see III.H.1. Dimple Diameter")	
1. Refrigerant Charge	a) Low.
2. Condenser	a) Dirty condenser or air filter.
3. Fan Motor	a) Defective.

Large-Hole Cubes - Possible Cause (Also see III.H.1. Dimple Diameter")	
4. Icemaker Location	a) Insufficient clearance.
	b) Ambient temperature too high.
5. Water Supply	a) Water leaks.
	b) Improper water pressure.
Cloudy Cubes - Possible Cause	
1. Water Quality	a) High hardness. See "III.H.2. Ice Clarity."
2. Slush Ice	a) Use Anti-Slush Control (Control Board Settings 50 and 51).

D. Bin Control Check and Cleaning

1. Bin Control Check

This appliance uses a lever-actuated proximity switch to control the ice level in the storage bin. No adjustment is required.

To check, follow the steps below.

1) Turn off the power supply.
2) Remove the front panel, then move the control switch to the "OFF" position.
3) Remove the control box cover. Clear any ice away from BC.
4) Check BC wire harness connections.
5) Disconnect BC wire harness connector from CB CN11 connector.
6) Check for continuity across the wires of BC wire harness connector. When the actuator paddle is not engaged, BC switch is closed. If open, check that the wire harness connector is properly connected and that the actuator paddle is not sticking. Clean if necessary. See "II.D.2. Bin Control Cleaning." If BC switch still reads open, replace BC.
7) Press and hold the actuator paddle; check for continuity across the wires of BC wire harness connector. When the actuator paddle is engaged, BC switch is open. If closed, check that the actuator paddle is not restricted. Clean if necessary. See "II.D.2. Bin Control Cleaning." If BC switch still reads closed, replace BC.
8) Reconnect BC wire harness connector to CB CN11 connector, then move the control switch to the "ICE" position. Turn on the power supply.
9) Allow the icemaker to cycle on. Press and hold the actuator paddle for at least 10 seconds. The icemaker should shut down. If it does not, replace CB.
   Note: If BC is engaged (open) while the water tank is opening after the power supply is turned on (or after the "RESET" button is pressed), shutdown does not start: Shutdown occurs 10 seconds after actuator motor's internal position sensor indicates water tank is fully open.

Legend: **BC**–bin control; **CB**–control board

Fig. 1

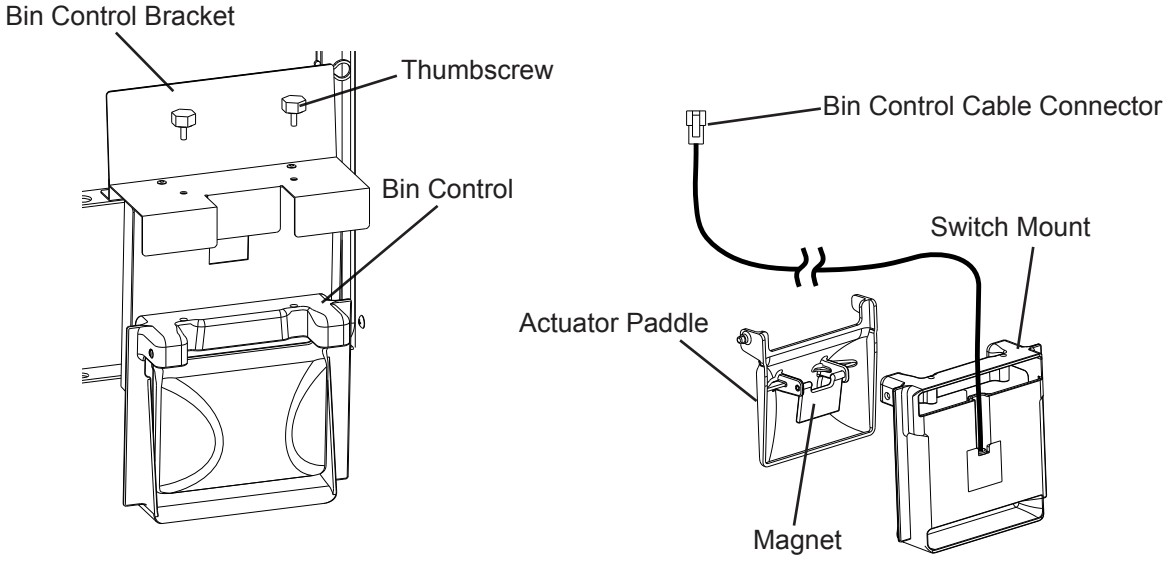

2. Bin Control Cleaning

Scale may build up on BC. Scale can cause the actuator paddle and magnet to stick. In this case, BC should be cleaned.

⚠ WARNING
CHOKING HAZARD: Ensure all components, fasteners, and thumbscrews are securely in place after the icemaker is serviced. Make sure that none have fallen into the dispense unit/ice storage bin.

1) Turn off the power supply.
2) Remove the front panel, then move the control switch to the "OFF" position.
3) Clear any ice away from BC.
4) Carefully remove the BC cable from the cable ties in the evaporator case, then remove the BC from the bin control bracket and move to the front of the icemaker for cleaning.
5) Remove the actuator paddle from the switch mount. See Fig. 1.
6) Wipe down BC with a mixture of 1 part of Hoshizaki "Scale Away" and 25 parts of warm water. Rinse the parts thoroughly with clean water.
7) Reassemble BC and replace it in its correct position.
   Note: If the magnet was removed for cleaning, be sure to replace it in its correct position.
8) Replace the BC cable into the cable ties in the evaporator case, then move the control switch to the "ICE" position.
9) Confirm CB wire harness connections are secure, then replace the control box cover in its correct position.
10) Turn on the power supply to start the automatic icemaking process.
11) Replace the front panel in its correct position.

Legend: **BC**–bin control; **CB**–control board

E. Evaporator Thermistor Check

To check thermistor resistance, follow the steps below.

1) Turn off the power supply.
2) Remove the front panel. Move the control switch to the "OFF" position.
3) Remove the control box cover.
4) Remove the thermistor from the evaporator.
5) Immerse the thermistor sensor portion in a glass containing ice and water for 2 or 3 min.
6) Disconnect the thermistor connector from CB CN13 connector and check the resistance between thermistor leads. Normal range is 4.7 to 6.2 kΩ. If outside the normal range, replace the thermistor. See "IV.B. Component Service Information." If within the normal range, continue to the next step.
7) Replace the thermistor in its correct position. See "IV.B. Component Service Information."
8) Reconnect the thermistor connector to CB CN13 connector.
9) Replace the control box cover in its correct position.
10) Move the control switch to the "ICE" position.
11) Replace the front panel in its correct position.
12) Turn on the power supply.

Legend: **CB**–control board; **Comp**–compressor

III. Controls and Adjustments

A. Control Switch

The control switch has three positions: OFF for power off, ICE for icemaking, and WASH to energize the water pump when cleaning and sanitizing.

B. Control Board

- A Hoshizaki exclusive control board is employed in IM series appliances.
- All models are pretested and factory adjusted.

NOTICE
• Fragile, handle very carefully. • The control board contains integrated circuits, which are susceptible to failure due to static discharge. It is especially important to touch the metal part of the icemaker when handling or replacing the control board. • Do not touch the electronic devices on the control board or the back of the control board. • Do not change wiring and connections. • Do not short out power supply to test for voltage. • Always replace the whole control board assembly if it goes bad.

1. Control Board Layout

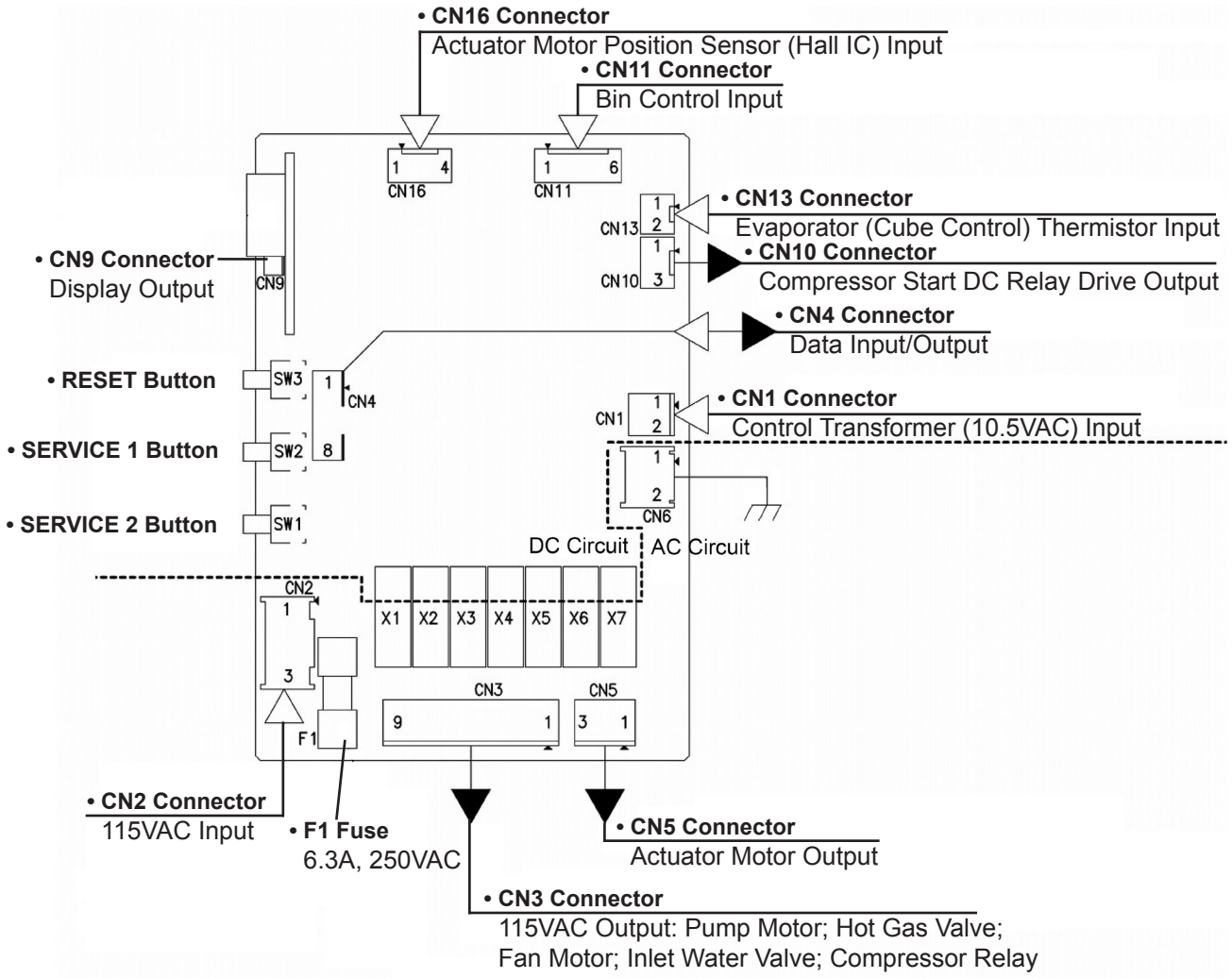

"IM" Control Board	
Part Number	P01873-01 Version 1.3A or Later

C. Control Buttons

The control board features RESET, SERVICE 1, and SERVICE 2 Buttons

1. RESET Button

- Press briefly to go to initial harvest cycle.
- Press and hold for 3 seconds to enter control board setting mode. For details about control board settings, see "III.D. Control Board Setting Mode and Control Board Settings."

2. SERVICE 1 and SERVICE 2 Buttons

- Press the "SERVICE 1" or "SERVICE 2" button briefly to display the current freeze cycle termination temperature (Control Board Setting 2). This setting controls dimple diameter. For details about adjusting the dimple diameter, see "III.H.1. Dimple Diameter." ***NOTICE!*** **Do not decrease dimple size below 3/16" (5 mm).**
- Press and hold the "SERVICE 1" button for 3 seconds to enter information display and model code setting mode. For details about information display and model code setting, see "III.F. Model Code Setting Mode."

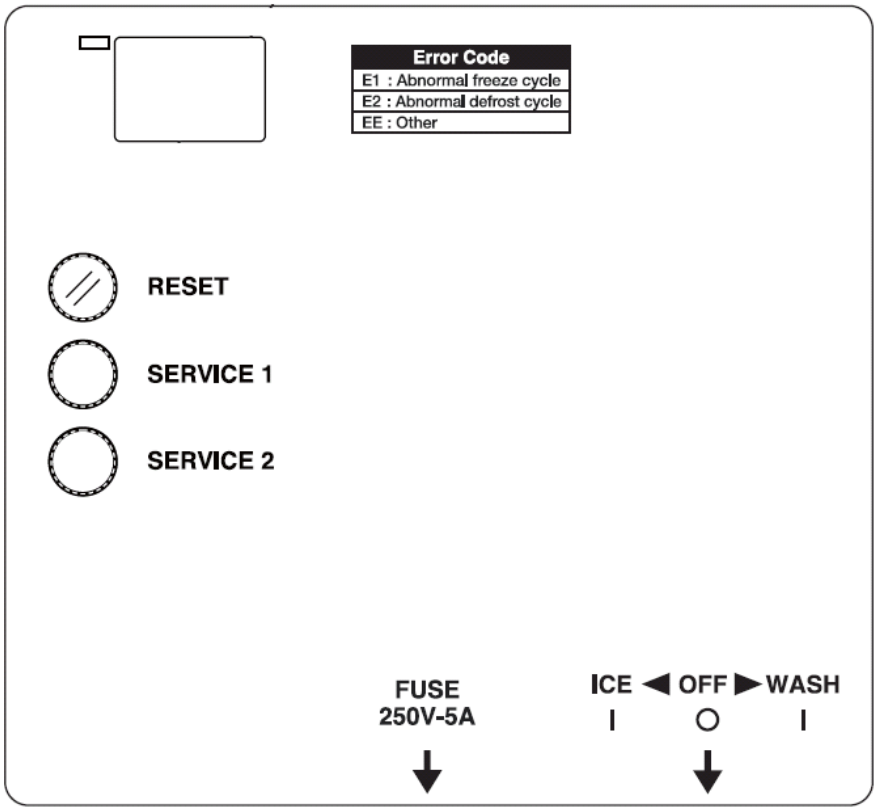

D. Control Board Settings

NOTICE
Failure to maintain factory settings may adversely affect performance and warranty coverage. For more information, contact your Hoshizaki Service Center.

1) With "on" in display, press and hold the "RESET" button for 3 seconds. Display changes to "1".
2) Use the "SERVICE 1" and "SERVICE 2" buttons to choose a control board setting.
3) Press the "RESET" button to view the setting's value. Current value flashes in display.
4) Use the "SERVICE 1" and "SERVICE 2" buttons to change value.
5) Press the "RESET" button to select value. Display returns to control board setting number.
6) Once display returns to "on" (20 seconds), the new setting is saved.

Control Board (CB) Setting Menu

Category	No.	Item	Range	IM-500SAA Default
Basic	1	Harvest Cycle Termination Temperature Temperature to complete harvest cycle.	2 to 20°C (1°C increments)	5
	2	Freeze Cycle Termination Temperature Integrated with freeze cycle termination time (CB Setting 3) to control length of freeze cycle after evaporator (cube control) thermistor temperature drops to 32°F (0°C). To use this setting for dimple size adjustment, see "III.H.1. Dimple Diameter."	-5 to -40°C (0.5°C increments. The "." in the lower, right corner of the display indicates .5°C.)	-18.5
	3	Freeze Cycle Termination Time Integrated with freeze cycle termination temperature (CB Setting 2) to control length of freeze cycle after evaporator (cube control) thermistor temperature drops to 32°F (0°C).	5 to 90 min. (1 min. increments)	10
	4	Ambient Temperature Correction Value for Freeze Cycle Termination **DO NOT ADJUST**	10 to 50°C (1°C increments)	10
	5	Ambient Temperature Correction Rate for Freeze Cycle Termination **DO NOT ADJUST**	10 to 100% (00 = 100) (1% increments)	100
	6	Freeze Cycle Backup Timer Maximum allowed freeze time to prevent possible freeze-up issues.	45 to 90 min. (5 min. increments)	45
Water Supply	10	Harvest Cycle Water Supply Time: Water Temperature 48°F (9°C) or Lower When set to "99", inlet water valve energized until harvest cycle termination temperature (CB Setting 1) is reached.	1 to 99 sec, 99 = continuous (1 sec. increments)	95
	11	Harvest Cycle Water Supply Time: Water Temperature Higher Than 48°F (9°C) When set to "99", inlet water valve energized until harvest cycle termination temperature (CB Setting 1) is reached.	1 to 99 sec, 99 = continuous (1 sec. increments)	30

Control Board (CB) Setting Menu				
Category	**No.**	**Item**	**Range**	**IM-500SAA Default**
Water Supply, continued	12	Freeze Cycle Water Supply Time 1: Partial Drain (CB Setting 14)	0 to 90 sec. (1 sec. increments)	30
		Freeze Cycle Water Supply Time 1: Full Drain (CB Setting 14)		60
	13	Water Temperature Correction Value Value added to correct the difference between the temperature at the evaporator (cube control) thermistor and actual water supply temperature.	+0 to +20°C (1°C increments)	11
	14	Partial/Full Drain Selection Controls timing for inlet water valve and pump motor in the freeze cycle. Partial Drain: Pump motor energizes after freeze cycle water supply time 1 (CB Setting 12) timer terminates. During the first freeze cycle after startup or following a bin control initiated shutdown and restart, freeze cycle water supply times 1 and 2 (CB Settings 12 and 15) are doubled. Full Drain: Pump motor energizes after freeze cycle water supply time 1 (CB Setting 12) timer terminates. If full drain is selected, change freeze cycle making water supply times 1 and 2 (CB Settings 12 and 15) to the full drain times listed in this table and move the water tank drain pipe to the drain position. For details, see "III.H.2. Ice Clarity."	Partial=1; Full=0	1
	15	Freeze Cycle Water Supply Time 2: Partial Drain (CB Setting 14)	0 to 90 sec. (1 sec. increments)	22
		Freeze Cycle Water Supply Time 2: Full Drain (CB Setting 14)		44
Other	21	Stackable Bin Control Allows for stacked units to be controlled through one bin control. **DO NOT ADJUST**	Yes=1; No=0	1
	22	Refrigeration Circuit Cycling when Bin Full **DO NOT ADJUST**	On=1; Off=0	0
Model	30	Type 0: WC, PS, No CondTherm, Ignore CB Setting 34 1: AC, No PS, No CondTherm, Use CB Setting 34 2: AC, No PS, CondTherm, Use CB Setting 34 3: AC, PS, No CondTherm, Use CB Setting 34 **DO NOT ADJUST**	0 to 3	3
Harvest Cycle High Temperature Control	34	Harvest Cycle High Temperature Control Active if type setting (CB Setting 30) is set to 1, 2, or 3. If control board thermistor temperature at the beginning of harvest cycle is equal to or greater than the harvest cycle high temperature control setting, fan motor operates continuously in harvest cycle.	40 to 70°C (1°C increments)	48
Water Regulating Valve	36	Water Regulating Valve Error Detection Temperature **DO NOT ADJUST**	0 to 50°C 0=ignore, air-cooled model (1°C increments)	0

Control Board (CB) Setting Menu				
Category	**No.**	**Item**	**Range**	**IM-500SAA Default**
Compressor	37	Compressor Output Selection **DO NOT ADJUST**	0: X8 (DC Relay) On 1: X1 (AC Relay) On	1
Anti-Slush Control	50	Pump De-Energized Time When temperature at evaporator (cube control) thermistor drops to 37°F (3°C) in the freeze cycle, pump de-energizes for the length of time set.	0 to 90 sec. 0=ignore, no anti-slush (1 sec. increments)	0
	51	Anti-Slush Control Water Supply Time Time inlet water valve is energized while pump is de-energized if pump de-energized time (CB Setting 50) is greater than 0.	0 to 5 sec. (1 sec. increments)	0
Hard Water Control	60	Integrated Value If hard water control water supply time (CB Setting 61) is greater than 0: After evaporator (cube control) thermistor indicates temperature of 32°F (0°C) in freeze cycle, inlet water valve energized starting when percentage of freeze cycle termination temperature and freeze cycle time integrated value has been achieved. **DO NOT ADJUST**	10 to 100% (00=100) (1% increments)	10
	61	Hard Water Control Water Supply Time Time inlet water valve is energized after integrated value (CB Setting 60) conditions are met. Before using this setting, follow the instructions to improve ice clarity; see "III.H.2. Ice Clarity."	0 to 90 sec. (1 sec. increments)	0
Water Tank Ice Control	70 71 72 74	If control board thermistor temperature is above the water tank ice control lower temperature setting (CB Setting 74) and equal to or less than the water tank ice control upper temperature setting (CB Setting 70) when freeze cycle termination temperature (CB Setting 2) is met, the hot gas valve energizes/de-energizes/energizes for the times set by the hot gas valve energized/de-energized times (CB Settings 71 and 72) to reduce bonding of the water tank to the evaporator.	See Ranges Below	See Defaults Below
Water Tank Ice Control & Ice Bridge Control	70	Water Tank Ice Control Upper Temperature See CB Setting 70, 71, 72, 74 description above. Ice Bridge Control Temperature See CB Setting 73 description below.	10 to 60°C (1°C increments)	44
Water Tank Ice Control	71	Water Tank Ice Control Hot Gas Valve Energized Time See CB Setting 70, 71, 72, 74 description above.	0 to 20 sec. (1 sec. increments)	5
	72	Water Tank Ice Control Hot Gas Valve De-Energized Time See CB Setting 70, 71, 72, 74 description above.	10 to 60 sec. (1 sec. increments)	25
Ice Bridge Control	73	Ice Bridge Control Hot Gas Valve De-Energized Time Time hot gas valve is de-energized after 20 sec. in harvest cycle if control board thermistor temperature is above the ice bridge control temperature (CB Setting 70) when freeze cycle termination temperature (CB Setting 2) is met.	0 to 30 sec. (1 sec. increments)	0

Control Board (CB) Setting Menu				
Category	**No.**	**Item**	**Range**	**IM-500SAA Default**
Water Tank Ice Control & Harvest Cycle Low Temperature Control	74	Water Tank Ice Control Lower Temperature See CB Setting 70, 71, 72, 74 description above. Harvest Cycle Low Temperature Control If control board thermistor temperature at the beginning of harvest cycle is equal to or less than the harvest cycle low temperature control setting, hot gas valve repeatedly energizes for 40 seconds then de-energizes for 40 seconds to promote a balanced harvest across the evaporator plate.	0 to 40°C (1°C increments)	27

E. Control Board Information Display

1. With unit on, press and hold the "SERVICE 1" button for 3 seconds. Display changes to "n1".
2. Use the "SERVICE 1" and "SERVICE 2" buttons to move through the list.
3. Press the "RESET" button to view the item's value.
4. Press the "RESET" button to return to list.
5. Display returns to normal if no buttons are touched for 20 seconds.

Control Board Information Display			
No.	**Item**	**Description**	**History Cleared by Pressing and Holding SERVICE 1 and SERVICE 2 Buttons Simultaneously for 5 Sec. when Item Value is Displayed?**
n1	Freeze Cycle Time During Freeze Cycle: Time since freeze cycle started. After Freeze Cycle: Time of previous freeze cycle.	0 to 99 min.	No
n2	Freeze Cycle Completion Rate During Freeze Cycle: Percent of freeze cycle completed. After Freeze Cycle: Percent of previous freeze cycle completed.	0 to 100% 00 = 100%	No
n3	Current Evaporator (Cube Control) Thermistor Temperature	°C	No
n4	Current Control Board Thermistor Temperature	°C	No
n5	Water Temperature Temperature at evaporator (cube control) thermistor 30 seconds after pump motor energized in freeze cycle plus the water temperature correction value (Control Board Setting 13).	"H" if Higher than 48°F (9°C) "L" if 48°F (9°C) or Lower	No
n6	Current Condenser Thermistor Temperature Not Applicable to IM-500SAA	°C	No

Control Board Information Display			
No.	**Item**	**Description**	**History Cleared by Pressing and Holding SERVICE 1 and SERVICE 2 Buttons Simultaneously for 5 Sec. when Item Value is Displayed?**
h1	Last Completed Freeze Cycle Time Freeze cycles interrupted by bin control shutdown or the "RESET" button are not recorded.	0 to 99 min.	Yes
h2	Number of Completed Freeze Cycles Since Last Counter Reset Counter updates every 10 freeze cycles. Freeze cycles interrupted by bin control shutdown or the "RESET" button are not recorded.	Displays up to 999,999 cycles. Displays two digits at a time. For example, 655,350 cycles display as follows: 65>off>53>off>50>off>- - (repeat)	Yes
h3	Total Number of Completed Freeze Cycles Counter updates every 10 freeze cycles. Freeze cycles interrupted by bin control shutdown or the "RESET" button are not recorded.		No
h4	Error Log Displays up to 5 errors with the most recent error first. For error details, see "III.G. Error Codes."	For example, E5 (most recent), E4, E3, E2, E1 (least recent of up to 5 errors) displays as follows: E5>off>E4>off>E3>off>E2>off>E1>off>- - (repeat)	Yes
h5	Firmware Version Displays control board's firmware version.	For example, version 1.0A, displays as follows: 01.>off>0A>off>- - (repeat)	No
h6	Model Code The model code puts all settings for a given model to the correct default settings. The model code setting mode should only be used when the control board has been changed, the model code is incorrect, or to reset all settings to the default. For details about the model code setting mode, see "III.F. Model Code Setting Mode."	Displays two-character model code. "00" to "FF"	No

F. Control Board Model Code Setting

1. Control Board Replacement

⚠ WARNING

- This appliance should be diagnosed and repaired only by qualified service personnel to reduce the risk of death, electric shock, serious injury, or fire.
- Move the control switch to the "OFF" position and turn off the power supply. Place the disconnect in the "OFF" position. Lockout/Tagout to prevent the power supply from being turned back on inadvertently.

1) Move the control switch to the "OFF" position and turn off the power supply. Place the disconnect in the "OFF" position. Lockout/Tagout to prevent the power supply from being turned back on inadvertently.
2) Remove the front cover and control box cover.
3) Disconnect all the connectors from the control board.
4) Remove the old control board and install the new control board (P01873-01 Version 1.3A or Later).
5) Connect the connectors to the new control board.
6) Replace the control box cover in its correct position.
7) Turn on the power supply, then move the control switch to the "ICE" position.
8) "00" appears in the display of the new control board.
9) Press the "SERVICE 1" button to increase the first digit in the display and the "SERVICE 2" button to increase the second digit. Digits appear in the following order: 0, 1, 2, 3, 4, 5, 6, 7, 8, 9, A, B, C, D, E, F. When a valid model code is displayed, the dot in the bottom right of the display turns on. For IM-500SAA, set model code to "08".
10) When the desired model code is displayed, press the "RESET" button to save the setting. "on" appears in the display.
11) Replace the front panel in its correct position.

2. Checking or Changing the Control Board Model Code

1) With unit on, press and hold the "SERVICE 1" button for 3 seconds. Display changes to "n1".
2) Use the "SERVICE 1" and "SERVICE 2" buttons to move through the list until "h6" is displayed.
3) Press the "RESET" button to view the current model code. To change the model code, continue through the remaining steps; otherwise, the display returns to normal if no buttons are touched for 20 sec.
4) Press and hold the "SERVICE 1" and "SERVICE 2" buttons simultaneously for 15 sec. "00" appears in display.

5) Press the "SERVICE 1" button to increase the first digit in the display and the "SERVICE 2" button to increase the second digit. Digits appear in the following order: 0, 1, 2, 3, 4, 5, 6, 7, 8, 9, A, B, C, D, E, F. When a valid model code is displayed, the dot in the bottom right of the display turns on. For IM-500SAA, set model code to "08".

6) When the desired model code is displayed, press the "RESET" button to save the setting. "on" appears in the display.

G. Error Codes

When the control board detects an error, the display shows one of the following error codes in the display mode. Error codes other than E1 and E2 are displayed as "EE" at the time of occurrence. To see the actual error code, see the error log.

1. With the unit on, press and hold the "SERVICE 1" button for 3 seconds. Display changes to "n1".
2. Use the "SERVICE 1" and "SERVICE 2" buttons to move through the list until "h4" is displayed.
3. Press the "RESET" button to view the error log. Displays up to 5 errors with the most recent error first.
4. Press the "RESET" button to return to list. To clear error log history, press and hold the "SERVICE 1" and "SERVICE 2" buttons simultaneously for 5 sec.
5. Display returns to normal if no buttons are touched for 20 sec.

Error Codes		
Error Code	**Problem**	**Corrective Action/Reset Details**
E1	Freeze Cycle Backup Timer Freeze cycle backup timer (Control Board Setting 6) has terminated. 45 min. after water tank starts to close in preceding harvest cycle, unit stops if the evaporator temperature is above 32°F (0°C).	Check for inlet water valve leaking by, hot gas valve leaking by, pump motor not pumping, thermostatic expansion valve not feeding properly, low charge, or inefficient compressor. Press the "RESET" button to reset.
E2	Harvest Cycle Backup Timer Harvest cycle backup timer has terminated. 30 min. after water tank starts to open in harvest cycle, unit stops if harvest cycle termination temperature (Control Board Setting 1) has not been reached.	Check for open thermistor, HGV not opening, TXV leaking by, low charge, or inefficient compressor. Press the "RESET" button to reset.
EE (E3)	Water Tank Opening Backup Timer 3-minute opening backup timer starts when water tank starts to open. If actuator motor's internal position sensor does not indicate water tank is fully open within 3 minutes, display shows "EE" and unit stops for 60 minutes. If error recurs after unit resumes operation, display shows "EE" and unit shuts down.	Check actuator motor and control board. Press the "RESET" button to reset.
EE (E4)	Water Tank Closing Backup Timer 3-minute closing backup timer starts when water tank starts to close. If actuator motor's internal position sensor does not indicate water tank is fully closed within 3 minutes, display shows "EE" and unit stops for 60 minutes. If error recurs after unit resumes operation, display shows "EE" and unit shuts down.	Check actuator motor and control board. Press the "RESET" button to reset.

Error Codes		
Error Code	**Problem**	**Corrective Action/Reset Details**
EE (E5)	High Evaporator Temperature If evaporator temperature 140°F (60°C) or higher for 5 sec., unit stops.	Check for harvest problem (stuck HGV or control board relay), hot water entering unit, or shorted thermistor. Press the "RESET" button to reset.
EE (E9)	Condenser Thermistor Error If condenser thermistor is open or shorted for 2 sec., unit stops. Note: IM-500SAA does not utilize a condenser thermistor, therefore E9 error will not occur.	Replace condenser thermistor.
EE (EA)	Control Board Error If model data IC is defective, unit stops.	Replace control board.
EE (EC)	Evaporator (Cube Control) Thermistor Error If evaporator thermistor is open or shorted for 2 sec., unit stops.	Replace evaporator thermistor.
EE (Ed)	Water Regulating Valve Error If water regulating valve thermistor detects a temperature below the water regulating valve error detection temperature (Control Board Setting 36), error is displayed but unit continues to operate. Note: IM-500SAA does not utilize a water regulating valve, therefore Ed error will not occur.	Check water regulating valve. Press the "RESET" button to reset.

H. Quick Adjustments

1. Dimple Diameter

The factory set dimple diameter is 3/16" (5 mm). ***NOTICE!*** **Do not decrease the dimple diameter below 3/16" (5 mm).**

a) To increase dimple diameter:

1) Remove front panel.
2) Press the "SERVICE 1" button to view the current freeze cycle termination temperature setting.
3) Press the "SERVICE 1" button to raise freeze cycle termination temperature setting (Control Board Setting 2). Temperature setting rises in .5°C increments. The "." in the lower, right corner of the display indicates .5°C. Default is -18.5°C. For reference, raising freeze cycle termination temperature setting to -13°C will result in a dimple diameter of approximately 3/8" (10 mm).
4) Once the display returns to "on" (20 seconds), the new setting is saved.

b) To decrease dimple diameter:

1) Remove front panel.
2) Press the "SERVICE 2" button to view the current freeze cycle termination temperature setting.

3) Press the "SERVICE 2" button to lower freeze cycle termination temperature setting (Control Board Setting 2). Temperature setting lowers in .5°C increments. The "." in the lower, right corner of the display indicates .5°C. Default is -18.5°C. ***NOTICE!*** **Do not decrease dimple size below 3/16" (5 mm).**

4) Once the display returns to "on" (20 seconds), the new setting is saved.

2. Ice Clarity

In hard water conditions, white ice may be produced. In such cases, install a water filter and/or water softener, then follow the instructions below.

1) Move the control switch to the "OFF" position, then turn off the power supply.

2) Remove the front panel.

3) Remove the screw, then move the water tank drain pipe to the drain position. See Fig. 2. Use the screw to secure the water tank drain pipe in the drain position.

4) Turn on the power supply, then move the control switch to the "ICE" position.

5) Press and hold the "RESET" button for 3 seconds. "1" appears in the display.

6) Press the "SERVICE 1" button until "12" appears in the display. Press the "RESET" button. The current icemaking water supply time value flashes in the display. Press the "SERVICE 1" or "SERVICE 2" buttons to change the setting to "60".

7) Press the "RESET" button to save the setting and return to the menu.

8) Using the same procedure as above, change the full/partial drain setting (Control Board Setting 14) from "1" (partial drain) to "0" (full drain).

9) Using the same procedure as above, change the additional icemaking water supply time setting (Control Board Setting 15) to "44".

10) Once the display returns to "on" (20 seconds), the new setting is saved.

11) Replace the front panel in its correct position.

Note: If white ice continues to be an issue, set hard water setting water supply time (Control Board Setting 61) to "15". This results in the inlet water valve energizing for 15 seconds part way through the freeze cycle and diluting the water in the water tank. Do not increase this setting beyond 15 seconds; otherwise, freeze cycle times may become long and bridging may occur in the ice storage bin.

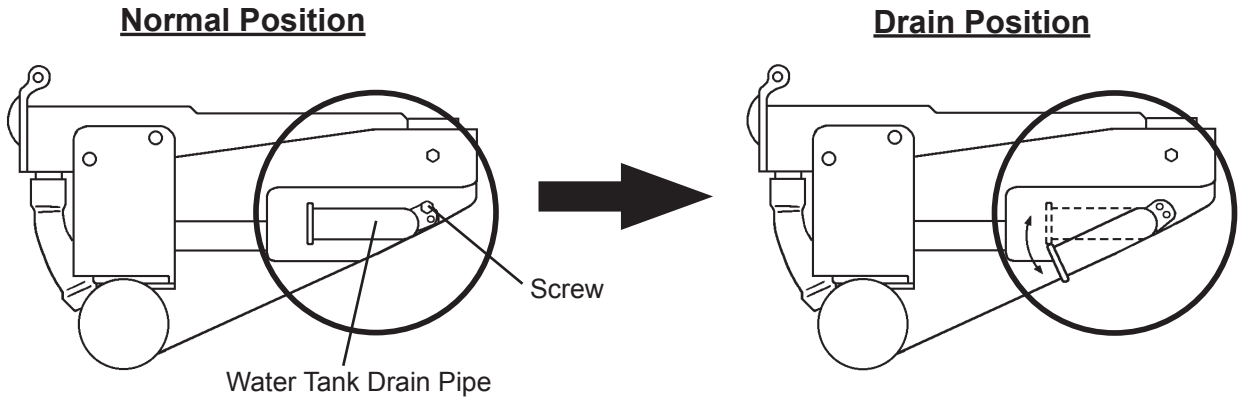

Fig. 2

IV. Refrigeration Circuit and Component Service Information

⚠ WARNING

- This appliance should be diagnosed and repaired only by qualified service personnel to reduce the risk of death, electric shock, serious injury, or fire.
- Move the control switch to the "OFF" position and turn off the power supply. Place the disconnect in the "OFF" position. Lockout/Tagout to prevent the power supply from being turned back on inadvertently.
- **CHOKING HAZARD:** Ensure all components, fasteners, and thumbscrews are securely in place after the icemaker is serviced. Make sure that none have fallen into the dispenser unit/ice storage bin.
- Make sure all food zones in the icemaker and dispenser unit/ice storage bin are clean after service.

A. Refrigeration Circuit Service Information

⚠ WARNING

- Repairs requiring the refrigeration circuit to be opened must be performed by properly trained and EPA-certified service personnel.
- Use an electronic leak detector or soap bubbles to check for leaks. Add a trace of refrigerant to the system (if using an electronic leak detector), and then raise the pressure using nitrogen gas (140 PSIG). Do not use R-404A as a mixture with pressurized air for leak testing.

NOTICE

- Always recover the refrigerant and store it in an approved container. Do not discharge the refrigerant into the atmosphere.
- Do not leave the system open for longer than 15 min. when replacing or servicing parts. The Polyol Ester (POE) oils used in R-404A applications can absorb moisture quickly. Therefore it is important to prevent moisture from entering the system when replacing or servicing parts.
- Always install a new drier every time the sealed refrigeration system is opened. Do not replace the drier until after all other repair or replacement has been made. Install the new drier with the arrow on the drier in the direction of the refrigerant flow.
- When brazing, protect the drier by using a wet cloth to prevent the drier from overheating. Do not allow the drier to exceed 250°F (121°C).

1. Refrigerant Recovery

The icemaker is provided with refrigerant access valves. Using proper refrigerant practices, recover the refrigerant. Store the refrigerant in an approved container. Do not discharge the refrigerant into the atmosphere.

2. Brazing

⚠ WARNING
• R-404A itself is not flammable at atmospheric pressure and temperatures up to 176°F (80°C). • R-404A itself is not explosive or poisonous. However, when exposed to high temperatures (open flames), R-404A can be decomposed to form hydrofluoric acid and carbonyl fluoride both of which are hazardous. • Do not use silver alloy or copper alloy containing arsenic.

1) Braze all fittings while purging with nitrogen gas flowing at a pressure of 3 to 4 PSIG.
   Note: Because the pipes in the evaporator case are specially coated to resist corrosion, it is important to make connections outside the evaporator case when possible. If it is necessary to braze inside the evaporator case, use sandpaper to remove the coating from the brazing connections before unbrazing the components.

NOTICE
• Always install a new drier every time the sealed refrigeration system is opened. • Do not replace the drier until after all other repair or replacement has been made. Install the new drier with the arrow on the drier in the direction of the refrigerant flow. • When brazing, protect the drier by using a wet cloth to prevent the drier from overheating. Do not allow the drier to exceed 250°F (121°C).

2) Use an electronic leak detector or soap bubbles to check for leaks. Add a trace of refrigerant to the system (if using an electronic leak detector), and then raise the pressure using nitrogen gas (140 PSIG). Do not use R-404A as a mixture with pressurized air for leak testing.

3. Evacuation and Recharge (R-404A)

1) Attach a vacuum pump to the system. Be sure to connect the charging hoses to both high and low-side refrigerant access valves.

IMPORTANT
The vacuum level and vacuum pump may be the same as those for current refrigerants. However, the rubber hose and gauge manifold to be used for evacuation and refrigerant charge should be exclusively for POE oils.

2) Turn on the vacuum pump. Open the gauge manifold valves. Never allow the oil in the vacuum pump to flow backwards.
3) Allow the vacuum pump to pull down to a 29.9" Hg vacuum. Evacuating period depends on pump capacity.
4) Close the low-side valve and high-side valve on the gauge manifold.

5) Disconnect the gauge manifold hose from the vacuum pump and attach it to a refrigerant service cylinder. Remember to loosen the connection and purge the air from the hose. For the required refrigerant charge, see the nameplate. Hoshizaki recommends only virgin refrigerant or reclaimed refrigerant which meets ARI Standard 700 (latest edition) be used.

6) A liquid charge is required when charging an R-404A system (to prevent fractionation). Place the service cylinder on the scales; if the service cylinder is not equipped with a dip tube, invert the service cylinder, then place it on the scales. Open the high-side valve on the gauge manifold.

7) Allow the system to charge with liquid until the proper charge weight is met.

8) If necessary, add any remaining charge to the system through the low-side. ***NOTICE!*** **To prevent compressor damage, use a throttling valve or liquid dispensing device to add the remaining liquid charge through the low-side refrigerant access valve with the icemaker running.**

9) Close the high and low-side gauge manifold valves, then disconnect the gauge manifold hoses.

10) Cap the refrigerant access valves to prevent a possible leak.

B. Component Service Information

NOTICE
When replacing a component listed below, see the notes to help ensure proper operation.

Component	Notes
Compressor	Install a new start capacitor, run capacitor, and start relay.
Thermostatic Expansion Valve	• Attach the thermostatic expansion valve bulb to the suction line in the same location as the previous bulb. • The bulb should be between the 10 and 2 o'clock positions on the tube. • Secure the bulb with the clamp and holder, then insulate it.
Hot Gas Valve	• Replace the strainer if applicable. • Use copper tube of the same diameter and length when replacing valve lines.
Fan Motor	Install a new capacitor.
Pump Motor	Install a new capacitor.
Actuator Motor	Install a new capacitor.
Evaporator (Cube Control) Thermistor	• Attach the new thermistor to the same location on the evaporator as the previous thermistor. • Smoothly fill the recessed area of the thermistor holder with high thermal conductive type sealant. KE-4560 RTV (manufactured by ShinEtsu Silicones) or equivalent are recommended. • Attach the new thermistor in position on the evaporator and press down the thermistor holder over the thermistor. • Be very careful to prevent damage to the leads.

Water Pan Assembly	Refer to illustration for assembly. 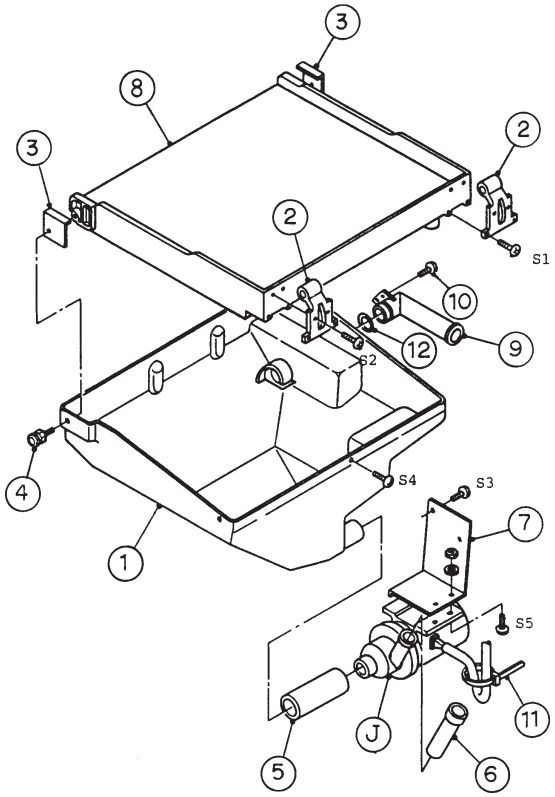 1. Water Tank 2. Water Plate Bracket 3. Bracket 4. Spring Hook Screw 5. Pump Tubing (Suction) 6. Pump Tubing (Discharge) 7. Pump Motor Bracket 8. Water Plate 9. Overflow Pipe 10. Screw (for Overflow Pipe) 11. Nylon Tie 12. O-ring J. Pump Motor Assembly S1-4. Tapping Screw S5. Machine Screw
Icemaking Assembly and Cam Mechanism	Refer to illustration for assembly. 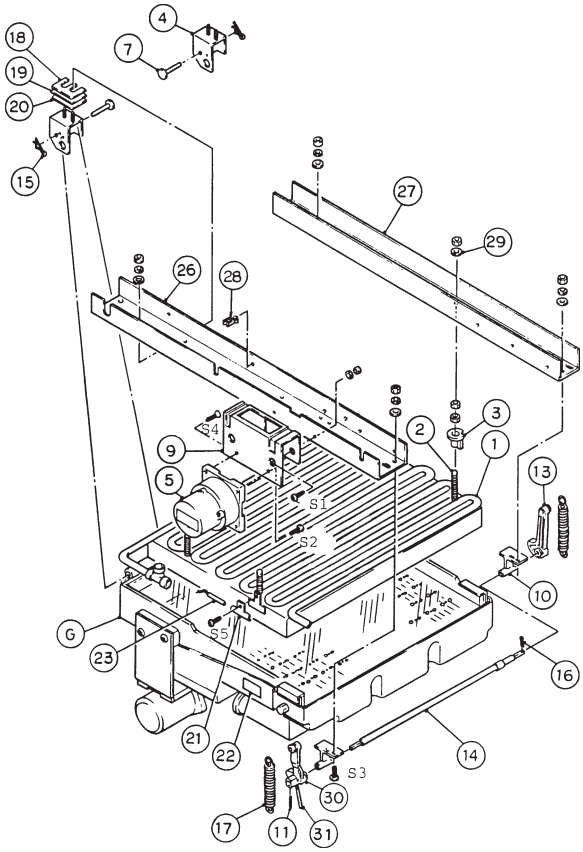 G. Water Pan Assembly 1. Evaporator 2. Bolt 3. Collar (Spacer) 4. Bearing 5. Actuator Motor 7. Shaft 9. Actuator Motor Bracket 10. Cam Shaft Bearing 11. Spring Pin 13. Cam Arm (B) 14. Cam Shaft 15. Snap Pin 16. Split Pin 17. Spring 18. Washer (A) 19. Washer (B) 20. Washer (C) 21. Thermistor Holder 22. Label (for Overflow Pipe) 23. Thermistor (Cube Control) 26. Frame 27. Frame 28. Wire Saddle 29. Washer 30. Cam Arm (A) 31. Change Lever S1-5. Machine Screw

V. Maintenance

The maintenance schedule below is a guideline. More frequent maintenance may be required depending on water quality, the appliance's environment, and local sanitation regulations

⚠ WARNING

- Only qualified service technicians should service the appliance.
- To reduce the risk of electric shock, do not touch the control switch or service switch with damp hands
- Before servicing: Move the control switch to the "OFF" position and turn off the power supply. Place the disconnect in the "OFF" position.
  Lockout/Tagout to prevent the power supply from being turned back on inadvertently.
- **CHOKING HAZARD:** Ensure all components, fasteners, and thumbscrews are securely in place after any maintenance is done to the icemaker. Make sure that none have fallen into the dispenser unit/ice storage bin.

Maintenance Schedule

Frequency	Area	Task
Daily	Scoop	Clean the ice scoop using a neutral cleaner. Rinse thoroughly after cleaning.
Bi-Weekly	Air Filters	Inspect. Wash with warm water and neutral cleaner if dirty.
Monthly	External Water Filters	Check for proper pressure and change if necessary.
	Icemaker Exterior	Wipe down with a clean, soft cloth. Use a damp cloth containing a neutral cleaner to wipe off oil or dirt build up. Clean any chlorine staining (rust colored spots) using a non-abrasive cleanser.
Yearly	Icemaker and Dispenser Unit/Ice Storage Bin Liner	Clean and sanitize per the cleaning and sanitizing instructions provided in the instruction manual or maintenance label on the icemaker.
	Water Supply Inlet	Close the icemaker water supply line shut-off valve and drain the water system. Clean the water supply inlet screen.
	Condenser	Inspect. Clean if necessary by using a brush or vacuum cleaner. More frequent cleaning may be required depending on location.
	Water Hoses	Inspect the water hoses and clean/replace if necessary.

VI. Preparing the Icemaker for Periods of Non-Use

NOTICE
• When storing the appliance for an extended time or in sub-freezing temperatures, follow the instructions below to prevent damage. • To prevent damage to the water pump, do not operate the appliance with the control switch in the "WASH" position when the water tank is empty.

When the appliance is not used for two or three days under normal conditions, it is sufficient to move the control switch to the "OFF" position. When storing the appliance for an extended time or in sub-freezing temperatures, follow the instructions below.

1. Remove the water from the icemaker water supply line:

1) Turn off the power supply.
2) Move the control switch to the "OFF" position.
3) Close the icemaker water supply line shut-off valve and open the icemaker water supply line drain valve.
4) Allow the icemaker water supply line to drain by gravity.
5) Attach compressed air or carbon dioxide supply to the icemaker water supply line drain valve.
6) Move the control switch to the "ICE" position and turn on the power supply.
7) Blow the icemaker water supply line out using compressed air or carbon dioxide.

2. Drain the water tank:

1) Turn off the power supply.
2) Remove the front panel.
3) Remove the screw, and move the tank drain pipe to the drain position.
4) Close the icemaker water supply line.
5) Turn on the power supply.
6) Press the the "RESET" button. The water tank will start to open.
   Note: This procedure is necessary to protect the icemaker from freezing up at subfreezing temperatures.
7) Turn off the power supply when the water tank has fully opened.
8) Move the tank drain pipe to the normal position, and secure it with the screw.
9) Replace the front panel.

VII. Disposal

The appliance contains refrigerant and must be disposed of in accordance with applicable national, state, and local codes and regulations. Refrigerant must be recovered by properly certified service personnel.

VIII. Technical Information

We reserve the right to make changes in specifications and design without prior notice.

A. Specification Data

1. IM-500SAA

AC SUPPLY VOLTAGE	115/60/1
AMPERAGE	11.5 A (5 Min. Freeze AT 104°F / WT 80°F)
MINIMUM CIRCUIT AMPACITY	20 A
MAXIMUM FUSE SIZE	20 A

APPROXIMATE ICE PRODUCTION PER 24 HR.
lbs./day (kg/day)
Reference without *marks

Ambient Temp.(°F)	WATER TEMP. (°F) 50	70	90
70	*500 (227)	481 (218)	447 (203)
80	485 (220)	456 (207)	417 (189)
90	481 (218)	*435 (197)	397 (180)
100	471 (214)	426 (193)	*363 (165)

SHAPE OF ICE	Cube Ice
ICE PRODUCTION PER CYCLE	6.9.lbs. (3.15kg) 140 pcs.
APPROXIMATE STORAGE CAPACITY	N/A

ELECTRIC & WATER CONSUMPTION	90/70°F	70/50°F
ELECTRIC W (kWH/100 lbs.)	990(5.45)	920(4.40)
WATER gal./24HR (gal./100 lbs.)	86(19.8)	105(21.0)

ENERGY STAR 3.0	YES
EXTERIOR DIMENSIONS (WxDxH)	44" x 27.6" x 21.7" (1118 x 700 x 550 mm)
EXTERIOR FINISH	Stainless Steel, Galvanized Steel (Rear)
WEIGHT	Net 196 lbs. (89 kg), Shipping 220 lbs. (100 kg)
CONNECTIONS - ELECTRIC	Permanent-Connection
- WATER SUPPLY	Inlet 1/2" FPT
- DRAIN	Outlet 3/4" FPT
CUBE CONTROL SYSTEM	Thermistor and Timer
HARVESTING CONTROL SYSTEM	Hot Gas, Thermistor and Timer
ICE MAKING WATER CONTROL	Timer Controlled. Overflow Pipe
COOLING WATER CONTROL	N/A
BIN CONTROL SYSTEM	Mechanical Level Switch with Delay
COMPRESSOR	Hermetic, Model NT6222GKV
CONDENSER	Air-Cooled, Fin and tube type
EVAPORATOR	Cell type, Copper and Tin dipping
REFRIGERANT CONTROL	Thermostatic Expansion Valve
REFRIGERANT CHARGE	R-404A 1lb, 10.5oz (750g)
DESIGN PRESSURE	High 350PSIG, Low 220PSIG
P.C. BOARD CIRCUIT PROTECTION	High Voltage Cut-out (Internal)
COMPRESSOR PROTECTION	Auto-reset Overload Protector (Internal)
REFRIGERANT CIRCUIT PROTECTION	Auto-reset High Pressure Control Switch
LOW WATER PROTECTION	N/A
ACCESSORIES -SUPPLIED	N/A
-REQUIRED	Ice Strage Bin
OPERATING CONDITIONS	VOLTAGE RANGE 104 - 127 V
	AMBIENT TEMP. 45 -100° F
	WATER SUPPLY TEMP. 45 - 90° F
	WATER SUPPLY PRESSURE 10 - 113 PSIG

B. Performance Data

Pressure data is recorded at 5 min. into freezing cycle. The data not in bold should be used for reference only.

1. IM-500SAA

APPROXIMATE ICE PRODUCTION PER 24 HR.	AMBIENT TEMP. (ºF/ºC)	WATER TEMP. (ºF/ºC)					
		50/10		70/21		90/32	
	70/21	**500**	227	481	218	447	203
	80/27	485	220	456	207	417	189
	90/32	481	218	**435**	197	397	180
lbs./day kg./day	100/38	471	214	426	193	**363**	165
APPROXIMATE ELECTRIC CONSUMPTION	70/21	**920**		941		967	
	80/27	936		968		993	
	90/32	941		**990**		1016	
watts	100/38	945		996		**1040**	
APPROXIMATE WATER CONSUMPTION PER 24 HR.	70/21	**105**	0.40	99	0.38	92	0.35
	80/27	101	0.38	92	0.35	84	0.32
	90/32	99	0.38	**86**	0.33	78	0.30
gal./day m^3/day	100/38	91	0.34	84	0.32	**71**	0.27
FREEZING CYCLE TIME	70/21	**17**		18		20	
	80/27	18		20		23	
	90/32	18		**22**		24	
min.	100/38	19		23		**27**	
HARVEST CYCLE TIME	70/21	**3.6**		3.0		2.0	
	80/27	3.2		2.2		2.0	
	90/32	3.0		**1.6**		1.5	
min.	100/38	2.4		1.6		**1.4**	
HEAD PRESSURE	70/21	**210**	14.8	231	16.3	255	18.0
	80/27	226	15.9	260	18.2	281	19.7
	90/32	231	16.3	**283**	19.9	306	21.5
PSIG kg/cm^2G	100/38	234	16.5	288	20.3	**327**	23.0
SUCTION PRESSURE	70/21	**42**	3.0	45	3.1	48	3.4
	80/27	44	3.1	48	3.4	52	3.6
	90/32	45	3.1	**51**	3.6	55	3.8
PSIG kg/cm^2G	100/38	45	3.2	52	3.6	**58**	4.1

TOTAL HEAT OF REJECTION FROM CONDENSER	4,500 BTU/h [AT 90ºF (32ºC) / WT 70ºF (21ºC)]
TOTAL HEAT OF REJECTION FROM COMPRESSOR	1,000 BTU/h [AT 90ºF (32ºC) / WT 70ºF (21ºC)]

C. Wiring Diagrams

1. IM-500SAA

Auxiliary Code: B-1 to H-0

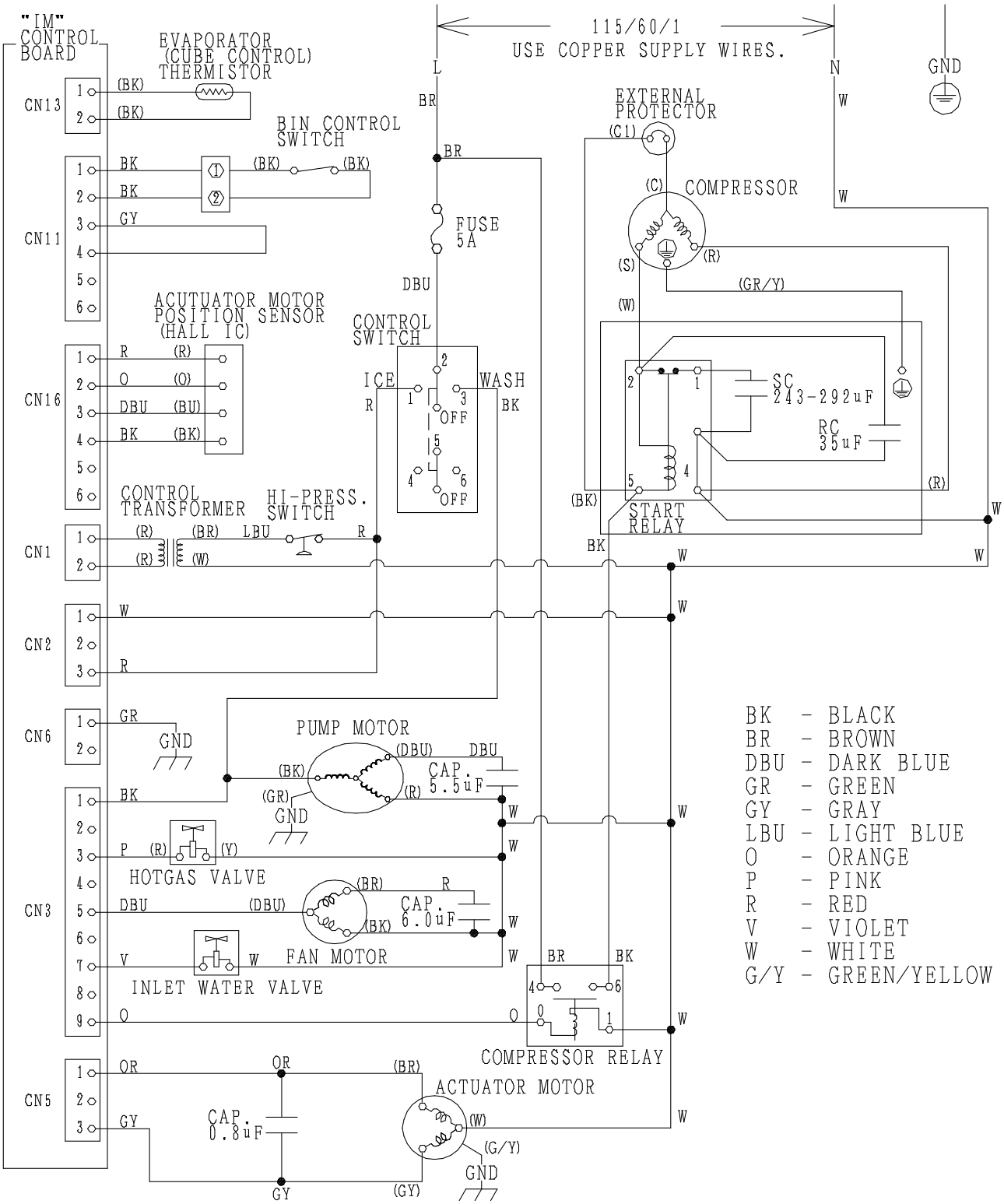

2. IM-500SAA
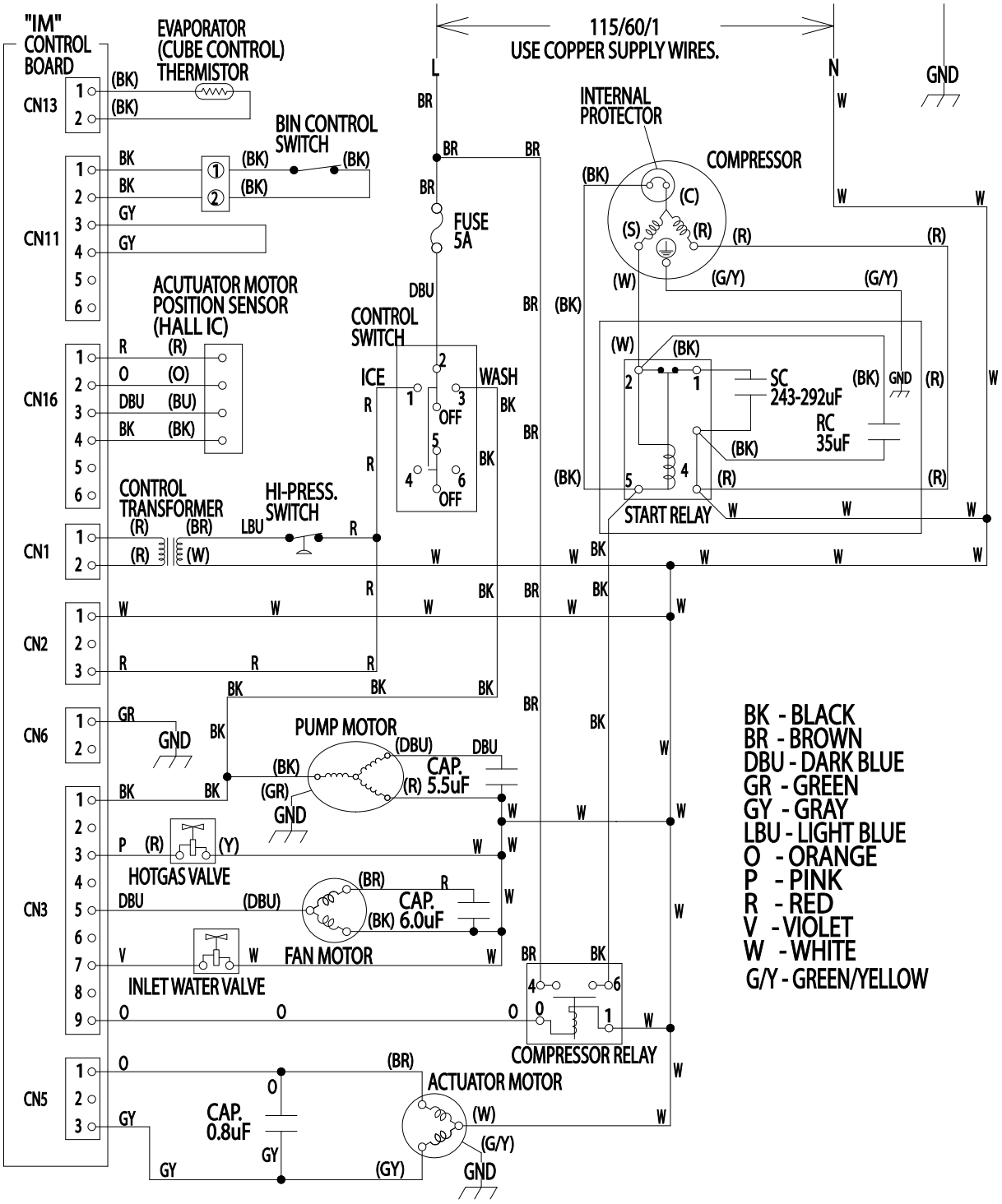
Auxiliary Code: H-1 and Later