The Challenge Machinery Company provides owner's manuals on its products solely as a courtesy to its customers. See the information below before using this manual.

These manuals are for reference only. These manuals include products which are noncurrent, unsupported or no longer produced by The Challenge Machinery Company, and are provided solely as an accommodation to our customers. By providing these manuals, The Challenge Machinery Company makes no representation or warranty as to the products, their current condition, or their suitability or fitness for use in any particular application, which are the sole and independent responsibility of the product owner and user.

Older products may not comply with current safety procedures, guidelines or regulations, and it is the product owner's and user's responsibility to evaluate the suitability and fitness of the products in their current use and application. The Challenge Machinery Company makes no representation, warranty or recommendation regarding any modifications which may be required on non-current or unsupported products. The Challenge Machinery Company assumes no liability for any modification or alteration to any Challenge product, and any such modification or alteration to any Challenge product is not authorized by The Challenge Machinery Company. The availability of these manuals is solely for the purpose of providing reference information for the products.

This manual may not be complete in all aspects of product maintenance and repair. **All products should be used only by qualified and properly trained personnel, following proper safety procedures.** All products should be regularly inspected and maintained, and their condition, application and use should be periodically evaluated by qualified personnel. Only qualified and properly trained technicians should perform maintenance, repair and replacement procedures. Attempting these procedures without proper training may cause machine damage or operator injury!

Products may be unsupported by The Challenge Machinery Company due to age or the unavailability of parts from their original manufacturer. No parts or product support will be available to repair or maintain unsupported products. Older products may not be UL listed (if the product does not have a UL label it is not a listed product), and may not comply with applicable installation or other regulations or requirements if relocated to a new facility. Many municipalities require a product to be UL listed before an electrician will connect power to them. Often the cost of updating an older product to comply with current safety regulations is greater than the value of the product.

TITAN 265 TC

Instruction and Parts Manual

Serial Numbers:
131965 through 159999,
265-D-150000 through 265-D-201411

Sold and Serviced by

The Challenge Machinery Company
6125 Norton Center Drive
Norton Shores, MI 49441-6081 USA

ChallengeMachinery.com

F.265-F
January 2024

1.0 Introduction

THIS MANUAL is designed to help you get the most from your Challenge equipment. Keep this manual in a safe, convenient place for quick reference by operators and service personnel.

⚠ CAUTION **SAFETY ALERT!** This symbol means **CAUTION: Personal safety instructions!** Pay special attention to the instructions in bold type. Personal injury may result if the precautions are not read and followed.

READ THIS MANUAL BEFORE OPERATING! Follow precautions and instructions given and you should have years of trouble-free operation. If after reading the manual questions still remain, contact your Authorized Challenge Dealer.

FOR PARTS AND SERVICE contact the Authorized Challenge Dealer from whom you purchased your machine. Use the illustrations and parts lists at the back of this manual to identify the correct parts needed. Always give the **SERIAL NUMBER** and **MODEL** of your machine to insure the correct parts are sent as soon as possible.

Take a few minutes right now to **RECORD YOUR MACHINE SERIAL NUMBER** in the space provided on the front cover of this manual. Also be sure to fill out the warranty card accompanying your machine and return it **DIRECTLY TO CHALLENGE.**

If you bought a used machine, it is important to have the following information on record at Challenge. Copy this page, fill in the information and send it care of The Challenge Service Department, Norton Center Drive • Norton Shores • MI 49441-6081.

CHALLENGE MODEL	SERIAL NUMBER	
ATTN	COMPANY	
ADDRESS		
CITY	STATE/PROVINCE	ZIP
PHONE	DATE INSTALLED	
DEALER NAME & CITY		

*** WARRANTY INFORMATION ***

It is very important that you read and understand the conditions outlined in the *Warranty Information Sheet* attached to the outside of the shipping container of your machine.

The *Warranty Information Sheet* must be filled out completely and returned to THE CHALLENGE MACHINERY COMPANY in order for the warranty to be issued for this machine.

Challenge® is a registered trademark of
The Challenge Machinery Company• 6125 Norton Center Drive • Norton Shores, MI 49441-6081
Copyright© 2024 by The Challenge Machinery Company. All rights reserved. Printed in the U.S.A

TABLE OF CONTENTS

1.0 Introduction 2

2.0 Safety 5
- 2.1 Precautions 5
- 2.2 Power Lockout Procedure 5
- 2.3 Warning Label Definitions 6

3.0 Packing List 8

4.0 Specifications 9

5.0 Installation & Setup 10
- 5.1 Inspecting Shipment 10
- 5.2 Uncrating 10
- 5.3 Cleaning 11
- 5.4 Fitting Through Narrow Door 11
  - 5.4.1 Removing the Extension Tables 11
  - 5.4.2 Removing the Table 12
  - 5.4.3 Removing the Electric Eyes 14
  - 5.4.4 Removing the Footswitch 14
  - 5.4.5 Attaching the Table 14
  - 5.4.6 Attaching the Extension Tables 14
  - 5.4.7 Attaching the Electric Eyes 15
  - 5.4.8 Attaching the Footswitch 15
- 5.5 Hydraulic System Check 15
- 5.6 Power Hook-Up (208/230 50/60Hz) 16
- 5.7 Power Hook-Up (380/400/415V 50Hz) 18
- 5.8 Line Light 20
- 5.9 False Clamp Plate 21

6.0 Operation 22

7.0 Knife Installation/Changing 23
- 7.1 Knife Removal 23
- 7.2 Knife Installation 24
- 7.3 Knife Care Tips 26
  - 7.3.1 Knife Blade Life 26
  - 7.3.2 Cut Stick 27
  - 7.3.3 Bevel Angle 27
  - 7.3.4 Helpful Suggestions 28
  - 7.3.5 Knife Care 28

Maintenance Section 29

8.0 Cleaning 31

9.0 Lubrication 32

10.0 Hydraulic System 34
- 10.1 Recommended Hydraulic Oil 34
- 10.2 Changing the Hydraulic Oil 35
- 10.3 Hydraulic Valve Adjustments 36

11.0 Adjustments 39
- 11.1 Electric Eye Alignment 39
- 11.2 Backgauge Gib Adjustment 40
- 11.3 Squaring the Backgauge 41
- 11.4 Backgauge Position Accuracy Adjustment 42
- 11.5 Clamp Height and Level Adjustment 42
- 11.6 Pre-Clamp Pressure Adjustment 44
- 11.7 Knife Latch Adjustment 45
- 11.8 Proximity Switches – Knife and Clamp 46
  - 11.8.1 Knife Down Proximity Switch 46

11.8.2 Clamp Up Proximity Switch 46
11.8.3 Knife Up Proximity Switch 47
11.8.4 Hydraulic Clamp Up Proximity Switch 47
11.9 Proximity Switch – False Clamp Plate 48
12.0 Troubleshooting 50
13.0 Parts List & Sequence of Operations 52
13.1 Main Assembly – Front View 52
13.2 Main Assembly – Side View 53
13.3 Main Assembly – Rear View 54
13.4 Main Assembly – Table View 55
13.5 Main Assembly – Parts List 56
13.6 Main Assembly – Parts List 57
13.7 Main Assembly – 3 Phase 50 Hz Option 58
13.8 Main Assembly – 3 Phase 60Hz Option 60
13.9 Main Assembly – Air Table Option 61
13.10 Main Assembly – Air Table Option Blower (w/Fuses) 62
13.11 Main Assembly – 460 Volt 3 Phase 60 Hz Option 64
13.12 Main Assembly – Stainless Steel Table Option 65
13.13 Electrical Panel Assembly – (w/Fuses) 66
13.14 Electrical Panel Assembly – (w/Circuit Breakers) 70
13.15 Basic Machine Schematic – Standard Cut Buttons w/fuses 76
13.16 Basic Machine Schematic – Ergo Cut Buttons w/fuses 77
13.17 Basic Machine Schematic – Standard Cut Buttons w/circuit breakers 78
13.18 Basic Machine Schematic – Ergo Cut Buttons (circuit breakers) 79
13.19 Electrical Sequence of Operation 80
13.20 Hydraulic Power Unit Assembly 82
13.21 Hydraulic Power Unit Assembly 84
13.22 Hydraulic Manifold Assembly 86
13.23 Hydraulic Manifold 87
13.24 Hydraulic Schematic 88
13.25 Hydraulic Sequence of Operation 89
13.26 Counterbalance Valve Assembly 90
13.27 Electric Eyes Assembly 92
13.28 Cut Button Assembly – Right Hand (Standard) 94
13.29 Cut Button Assembly – Left Hand (Standard) 95
13.30 Cut Button Assembly – ErgoTouch Option 96
13.31 Cut Button Assembly – ErgoTouch Option 98
13.32 TC Control Console Assembly 99
13.33 Pre-Clamp Compressor Assembly 100
13.34 Backgauge Control Assembly 101
13.35 Knife Latch Assembly 102
13.36 Line Light Assembly 103
13.37 Blower Assembly – Air Table Option 104
13.38 Power Panel Connection Procedure Label w/fuses 105
13.39 Power Panel Connection Procedure Label w/circuit breakers 106
TC Power Panel PCB Troubleshooting 107
14.0 Safety Systems Test 108

2.0 Safety

2.1 Precautions

- This machine is designed for one-person operation. Never operate the machine with more than one person.
- Safe use of this machine is the responsibility of the operator. Use good judgment and common sense when working with and around this machine.
- Read and understand all instructions thoroughly before using the machine. If questions remain, contact the dealer from which you purchased this machine. Failure to understand the operating instructions may result in personal injury.
- Only trained and authorized people should operate this machine.
- Do not alter safety guards or devices. They are for your protection. Severe personal injury may result.
- Disconnect power before cleaning or performing maintenance. See Section 2.2 Power Lockout Procedure.
- Observe all caution labels on this machine.
- Be sure the cutter is properly grounded.
- Be sure there is sufficient power to operate the cutter properly.
- Observe all caution plates mounted on this cutter.
- Keep foreign objects off table and away from cutter blade.
- **BE EXTREMELY CAREFUL** when handling and changing the cutter knife. Severe lacerations or dismemberment could result from careless handling procedures.
- Keep the floor around the cutter free of trim, debris, oil and grease.
- When replacing hydraulic parts, loosen the connections slowly to release pressure. Never loosen connections with the machine running.
- If the cutter sounds or operates unusually, turn it off and consult the troubleshooting section of this manual. If the problem cannot be corrected, have it checked by a qualified service person.
- **CRUSH HAZARD**, keep hand and fingers from under the clamp when clamping paper. Use Jogging Aid to load paper, and use the backgauge to push paper out before unloading. **DO NOT REACH UNDER THE KNIFE AND CLAMP AREA!**

2.2 Power Lockout Procedure

For maximum safety when making adjustments or repairs to your machine, be sure to lock out the main power control switch to which the machine is connected. The switch should be moved to the OFF position and a padlock placed in the loop. The key should be held by the person servicing the machine.

Figure 1

2.3 Warning Label Definitions

The following warning labels are found at various locations on your machine. Read and understand the meaning of each symbol. If a label is lost from the machine, it should be replaced.

HAZARDOUS AREA

Disconnect power before cleaning, servicing, or making adjustments not requiring power. Do not alter safety guards or devices; they are for your protection. Replace all guards. Do not operate with any guards removed.

SHOCK HAZARD

Disconnect power before removing cover. Replace cover before operation.

SHOCK HAZARD

Disconnect power before removing cover. Replace cover before operation.

SINGLE OPERATOR

Do not operate with more than one person.

!OJO!

CAUTION **This Este simbolo de alerta de seguridad significa ¡ OJO ! - INSTRUCCIONES DE SEGURIDADPERSONAL. Lea las instrucciones porque se refieren a su seguridad personal. Fall de obedecer las instrucciones que siguen podria resultar en lesiones corporales.**

- Esta maquina, junto con sus mecanismos de seguridad, esta disenada para ser manejada por
- **UNA SOLA PERSONA** a la vez. Jamas debe ser manejada por mas de una persona al mismo
- tiempo.
- La seguridad es la responsabilidad del operario que usa esta maquina.
- **LEA DETENIDAMENTE** el manual de instrucciones y las **PRECAUCIONES DE SEGURIDAD** antes de poner a funcionar la cortadora. Pidale a su supervisor una copia.
- El manejo de la guillotina debe estar exclusivamente a cargo de personal entrenado y autorizado para ello.
- **NO MODIFIQUE LOS MECANISMOS DE SEGURIDAD**, estan ahi para su proteccion no deben ni modificarse ni quitarse.
- **DESCONECTE LA CORRIENTE ELECTRICA** antes de proceder a hacerle servicio de limpieza, engrasar, o de hacer adjustes que no requieren corriente. Trabe el interruptor en la posicion **OFF** (apagado); vea “Procedimiento para cortar la corriente electrica” al pie de esta pagina.
- Eche llave a la guillotina y quite la llave cuando la maquina no esta en operacion; vea “Corriente electrica”.
- Asegurese de que la guillotina este debidamente a tierra. Vea “Conexion de la fuerza electrica”.
- Verifique el voltaje y asegurese de que este sea suficiente para el debido funcionamiento de la guillotina.
- Preste atencion a todas las placas con advertencias instaladas en esta guillotina.
- No permita que objetos estranos esten en la mesa o cerca de la cuchilla cortadora.
- **TENGA SUMO CUIDADO** al tocar y cambiar la cuchilla. Heridas severas y hasta desmembramiento pueden resultar del manejo sin cuidado o negligente.
- El suelo alrededor de la guillotina debe mantenerse despejado y libre de recortes, desperdicios, aceite y grasa.
- Al haber la necesidad de reemplazar partes hidraulicas, afloje todas las conexiones poco a poco para dejar escapar la presion. Jamas debe aflojarse conexiones mientras la maquina este
- andando.
- Si la guillotina empezara a sonar o trabajar diferentemente a lo acostumbrado, desconectela y consulte la seccion “Troubleshooting” (Reparador) de este manual. Si no es posible corregir el problema, llame a su servicio autorizado para que le examinen la maquina.
- **PELIGRO DE MACHUQUE** - Mantenga manos y dedos fuera de la agarradera mientras sujeta el papel. Use el calibrador trasero y su rueda de mano para empujar el papel cortado. **NO PONGA SUS MANOS BAJOLA CUCHILLA O AREA DE LA AGARRADERA.**
- **NO OPERE SIN LAS GUARDAS PROTECTORAS!**

¡ OJO ! PRECAUCION - Como proceder para desconectar la corriente electrica.

Para maxima seguridad durante ajustes y reparaciones de su maquina, verifique bien que el interruptor principal de control de corriente al cual la maquina esta conectada, este desconectado. El interruptor deba ser puesto en la posicion “OFF” (desconectado) y se debe poner un candado en la anilla. La llave del candado debe ser guardada por la persona que estara efectuando los trabajos de servicio o de reparacion en la guillotina.

Desconecte la corriente electrica antes de proceder a hacer cualquier ajuste o reparacion o de efectuar el engrase en cualquier maquina.

3.0 Packing List

Part No.	Description	Qty.
2263-3	Knife – High Speed Steel	2
44027	False Clamp Plate	1
4165	Cutting Stick (in addition to one installed in machine)	3
A-12608-4	Jogging Aid	1
20-2150-4	Tool Kit	1
H-6918-608	Knife Bolts, 3/8 – 16 x 1”	6
8815	Knife Washers, Special	6
5064	Cutting Stick Puller	1
44183	Knife Lifter Assembly	1
W-141	1/8” Allen Wrench	1
W-137	5/32” Allen Wrench	1
W-164	5/16” Hex ‘T’ Wrench	1
W-158	3/8 x 5/16” Wrench	1

Optional Items

Part No.	Description	Qty.
44027-2	False Clamp Plate (book trimming)	
50082	Magnetic Clamp Pads (2 per pkg.)	
5-7-M361	Book Guides	
41058	Waste Wagon	

4.0 Specifications

Description	Inch Units	Metric Units
Cutting Width	26 ½”	67.3 cm
Minimum Cut*	5/8”	16 mm
Clamp Opening	4”	10.2 cm
Table Space Front: Back:	 24 ¼” 28”	 62 cm 71 cm
Dimensions		
Table Height	36”	91 cm
Overall Height	59”	150 cm
Overall Length**	69 ½”	176.5 cm
Overall Width	54”	137.2 cm
Approx. Net Weight	1780 lbs	807 kg
Approx. Shipping Weight	2020 lbs	916 kg
Floor Loading	22 PSI	14.9 kPa
Electrical		
Standard: 5 HP, 3 Phase, 60 Hz AC; 208/230V, 25 Amps (Service size: 30 Amps) *Optional* Phase Converter Kit: **K-3482** (1 Phase, 208/230V, Service size: 50 Amps) *Optional:* 5 HP, 3 Phase, 50 Hz AC; 380/415V, 10 Amps (Service size: 20 Amps)		
Sound Emission		
A-weighted sound pressure level measured in an enclosed room at operator level (6 feet/183 cm): Machine in idle state: 60 dB Machine cycling without cutting paper: 70 dB		

*With false clamp plate attached, minimum cut is 2” (51 mm).
**With table, electric eyes, and footswitch removed, can be fit through a 32” (81.3 cm) door opening.

Challenge reserves the right to make changes to any product or specification without notice and without incurring responsibility to existing units.

5.0 Installation & Setup

5.1 Inspecting Shipment

This machine has been carefully packed to prevent damage during shipment. However, claims for damage or loss are the responsibility of the recipient. Inspect all shipments as soon as they are received. If there is any noticeable damage, note it on the freight bill. Visual and/or hidden damage must be reported to the claims department of the carrier within 15 days. Contact your dealer if you need any assistance. Check the contents of the box against the packing list on page 8. Make sure there are no missing items.

5.2 Uncrating

The Titan 265 weighs approximately 1780 lbs (807kg). DO NOT risk personal injury or damage by attempting to move machinery with makeshift equipment or inadequate manpower. This machine is shipped on a wooden skid and enclosed in a protective, corrugated top. The machine is secured in place with (4) lag screws. All accessories are packed in a separate box.

Remove the carton by removing the nails or staples holding it to the skid and lift it straight up over the cutter. If you don't have the ceiling clearance to do this, carefully slit the carton down the side and then unwrap it from around the cutter. Remove the accessory box. Remove the lag screws that secure the machine to the skid. Cut shipping straps on the hydraulic reservoir and remove wood spacer from under reservoir.

The machine may then be removed from the skid. A fork-lift may be used if the forks will extend to the back of the machine base. Raise the machine enough to create a small clearance between the skid and machine. Make sure the forks engage the fork pockets found beneath the base. Remove the skid.

⚠ CAUTION **DO NOT place hands under machine at any time during skid removal**. Place the machine on the ground and readjust placement of the forks for safe transport to its destination.

Alternately, the following method may be used to lift the machine from the skid. Remove the table extensions (page 11) and the lower front cover. Using lifting straps rated at 2000 lbs. or more, wrap the straps around the machine base from front to back on each side of the table as shown in Figure 2 & Figure 3. Hoist the machine and remove its skid.

IMPORTANT! Do not lift the machine by any portion of the table. The aluminum table may pull from the base and strip its mounting threads. Injury may result.

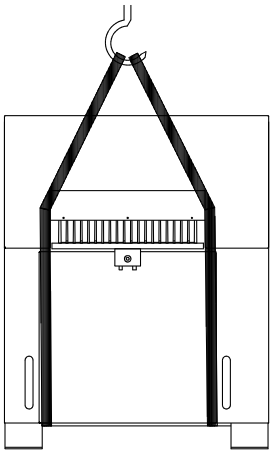

Figure 2

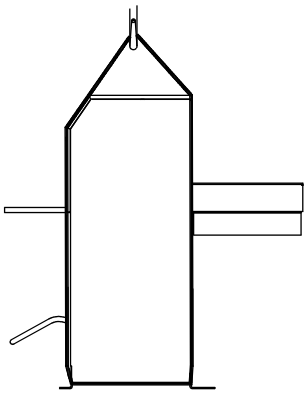

Figure 3

5.3 Cleaning

After unpacking, wipe down all machine panels and clean the table surface. The touch screen and control console should be cleaned using a mild water-based soap solution. **DO NOT use petroleum or oil based solvents as they will damage the touch screen and control console.**

5.4 Fitting Through Narrow Door

As shipped, the Titan 265 cutter will not fit through an opening less than 57” (137 cm). With the extension tables removed, it will fit through a 46-1/2” (118 cm) opening. With the table and electric eyes removed, it will fit through a 32” (81.3 cm) opening.

5.4.1 Removing the Extension Tables

Make sure power is disconnected from the machine. Remove the front table plate (Figure 4) by removing the hex nuts. Remove the extension table hardware and remove extension tables.

NOTE: There may be shims located between the extension tables and the extension table brackets. These are used for leveling the extension tables at the factory. Take note as to where they are located so they can be placed in the proper position when reattaching the extension tables later.

Now remove the two extension table support brackets (Figure 4).

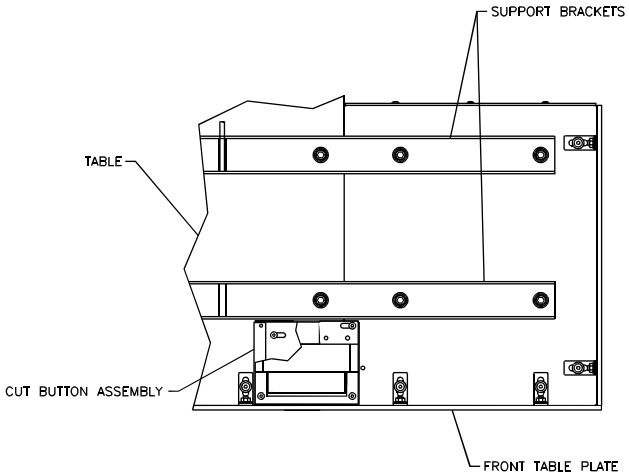

View from underneath table

Figure 4

5.4.2 Removing the Table

Make sure the knife has been removed from the machine and that the knife and clamp are in the “up” position. If they are not, read the Power Hookup Section (page 16) to connect power to the machine. Turn on the power using the red and yellow main power switch and follow the prompts on the screen to send the knife and clamp up.

Turn off the machine and disconnect the power.

Make sure the extension tables have been removed (page 11). Remove the 2-hand button controls. Remove the sheet metal covers from the rear of the table. Remove the backgauge motor cover, the lower back panel, and the lower front cover of the machine.

Unplug the cable to the encoder at the back of the machine (Figure 5). Remove the motor junction box cover and disconnect the wires to the motor (Figure 5). Remove the leadscrew cover and the nylon tyraps that are attached to the bottom of the table. The motor wires and encoder wires should now be free from the table.

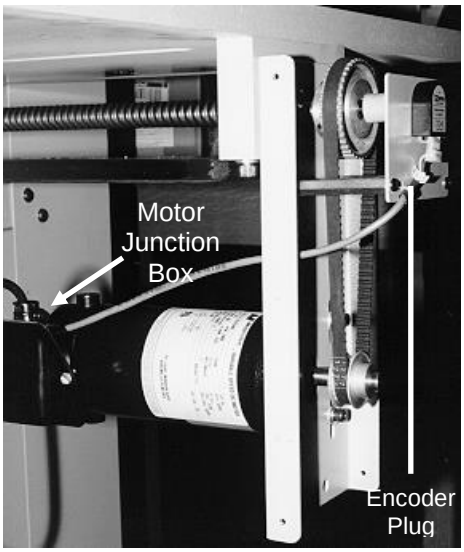

Figure 5

Remove the preset board assembly from the bottom of table (Figure 6).

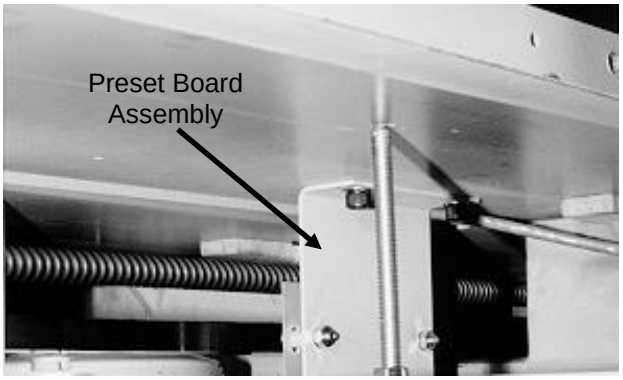

Figure 6

Open the top hood and loosen the jam nut on left hand side guide support screw and turn it in a few turns for clearance, then remove the left and right side guides as shown in Figure 7 & Figure 8.

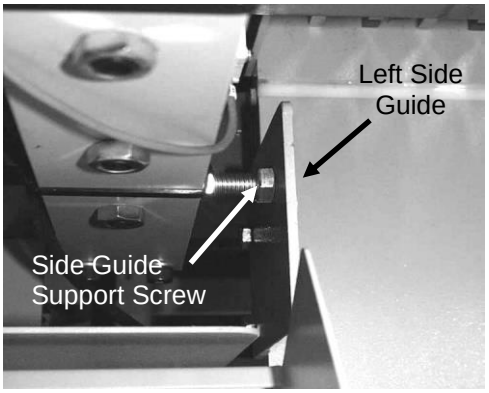

Figure 7

Figure 8

Remove the two taper pins from the bottom side of the table by tightening the jam nut on the taper pin. Then remove the four screws that mount the table to the base. **CAUTION: the table assembly is very heavy and requires at least four people to remove.** Pull the table out towards the back of the machine.

5.4.3 Removing the Electric Eyes

Make sure power is disconnected from the machine. Remove the top cover. Remove the four hex-head screws for each electric eye assembly from the inside of the machine. By sliding some of the slack in the cable through the side of the machine, the eye assemblies can be set on the machine. If it is necessary to completely remove the eyes from the machine, the wires must be disconnected from the power panel.

5.4.4 Removing the Footswitch

Make sure power is disconnected from the machine. Remove lower front cover. Remove the two screws that mount the footswitch bracket (Figure 9). Lay footswitch assembly inside the machine.

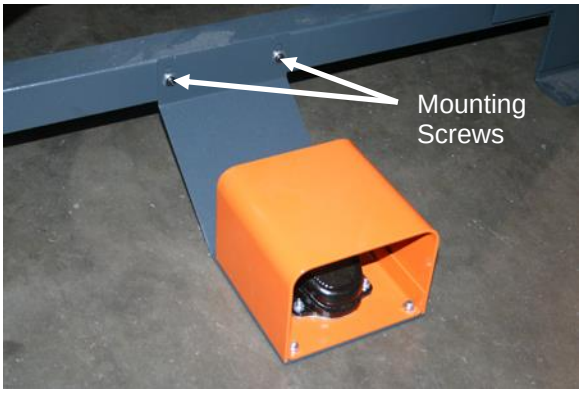

Figure 9

5.4.5 Attaching the Table

Set the table in position, and start its front two mounting screws. Then start the rear two mounting screws. Replace the two taper pins (must be snug to seat the table), and then tighten all four screws. Attach the right and left side guides then re-adjust the left hand side guide support screw until it contacts the side guide and tighten the jam nut. (Figure 7 & Figure 8 on page 13), the preset board assembly (Figure 6 on page 13), the motor and encoder wire (Figure 5 on page 12) and all guards and panels.

Once the table is installed, the backgauge squareness and accuracy must be readjusted (see Section 11.3 Squaring the Backgauge on page 41 and Section 11.4 Backgauge Position Accuracy Adjustment on page 42).

5.4.6 Attaching the Extension Tables

Attach the extension table support brackets to the under side of the main table as shown in Figure 10, but do not tighten screws completely. Route each cut button wire through the slots in the brackets while attaching them. Next, place any shims that were installed at the factory in the position they were in when the extension tables were removed. Lay the table extensions in place and insert the screws. Align the front edges of the tables and tighten screws. Attach the front table plate.

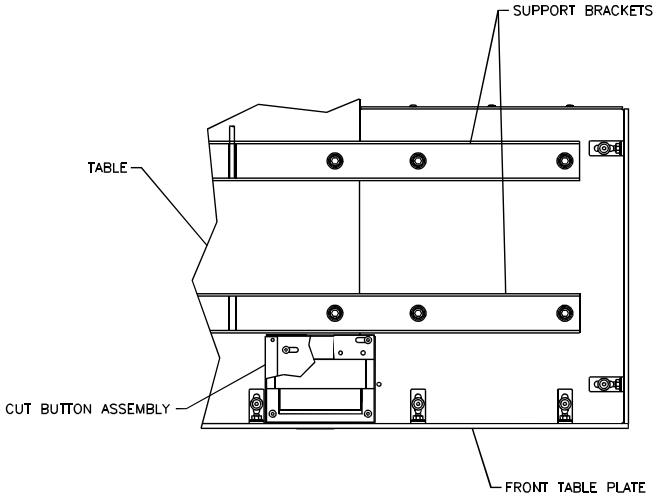

Figure 10

5.4.7 Attaching the Electric Eyes

Make sure power is disconnected from the machine. If necessary, connect the wires to the power panel. Attach electric eye assemblies with provided hardware, making sure that the bottom of the electric eye housings are parallel to the table. Once power is hooked up, the electric eyes should be checked for alignment (see Section 11.1 Electric Eye Alignment on page 39).

5.4.8 Attaching the Footswitch

Make sure power is disconnected from the machine. Attach the footswitch bracket using the mounting hardware (Figure 9, page 14).

5.5 Hydraulic System Check

The Titan 265 is powered by a hydraulic system consisting of an electric motor coupled directly to a hydraulic pump.

The hydraulic reservoir holds 5 gallons of hydraulic fluid. It is filled with ISO VG #46 hydraulic fluid at the factory but should be checked before operation. Remove the lower rear panel cover. Check the sight gauge on the rear side of the hydraulic tank. Fluid should just be visible in the sight gauge (Figure 11). Add fluid if necessary, but avoid overfilling. For more information about checking and changing the hydraulic fluid, see Section 10.2 Changing the Hydraulic Oil, page 35. When finished, replace the panel.

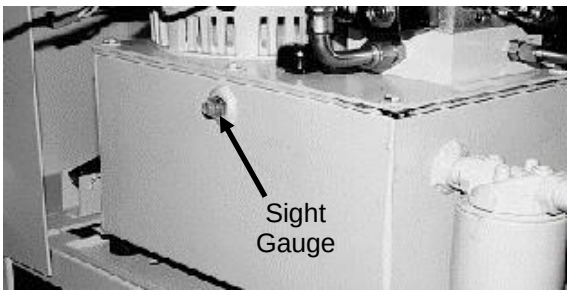

Figure 11

The hydraulic fluid should be checked weekly and changed **AT LEAST ONCE-PER-YEAR** or after every 1,000 hours of operation.

5.6 Power Hook-Up (208/230 50/60Hz)

For satisfactory operation, be sure that your cutter is wired for the correct phase and voltage and has adequate power. The correct electrical specifications for your machine are shown on the serial plate. Check the machine serial plate before connecting the power. For future reference, transfer this information to the front cover of this manual.

Watch Setup Voltage- Inadequate power to the cutter can be a major source of problems. Too many machines on the same circuit will reduce the power to each machine. Inadequate voltage will frequently cause overheating, loss of power, and in extreme cases, failure to operate. Test your voltage when the shop is at actual working levels. Challenge recommends a dedicated line with a lockable disconnect to provide adequate power for this machine.

⚠ CAUTION **CAUTION**: **SHOCK HAZARD! Always disconnect power at main power panel before working on the cutter. Lock it out to prevent accidental power up. (See Power Lockout Procedure page 5).**

Important: You must have an adequate size circuit and heavy enough wiring for this machine. The circuit size should be a minimum of 20% greater than the amperage rating on the machine nameplate. If a wire is run over 75 feet (23 meters), the next size wire should be used. Check local electrical codes.

Electrical Specifications for the 208/230V Titan 265:

Volts	Amps	Phase	Hz	Circuit Size	Wire Size	Metric Wire
208/230V	25A	3 PH	60 Hz	30A	#10 AWG	6mm sq.

IMPORTANT: There are two places that must be set for the proper incoming voltage. The first is the terminal blocks found in the power panel. Check incoming voltage and position the Terminal Block Jumper for the proper voltage selection location as shown in Figure 12.

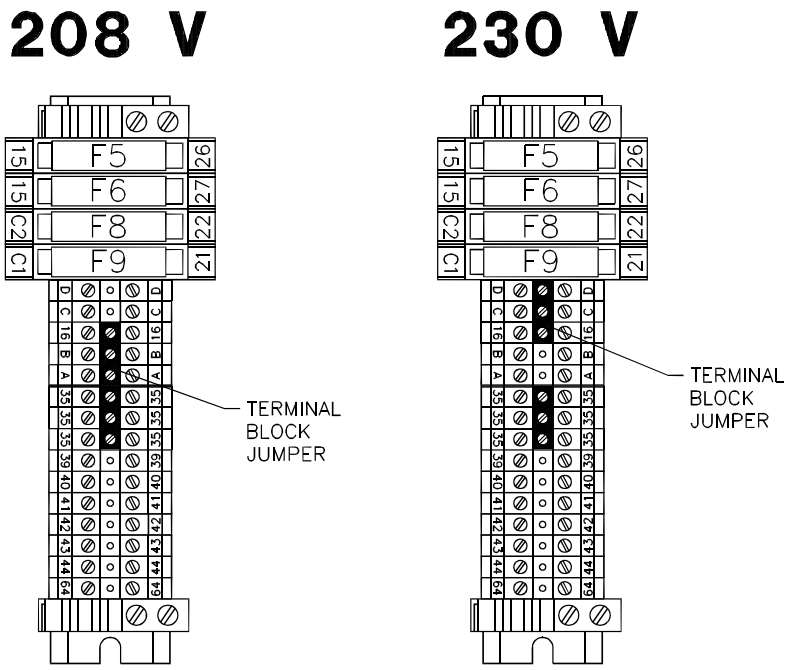

Figure 12

NOTE: The terminal block jumper must be set to the correct location according to the supply voltage of the machine. **Failure to set the terminal block jumper will cause damage to the machine!**

The second place that must be set for the proper incoming voltage is the transformer terminal strip behind the control console. Check the incoming voltage and move wire #21 to the proper terminal as shown in Figure 13

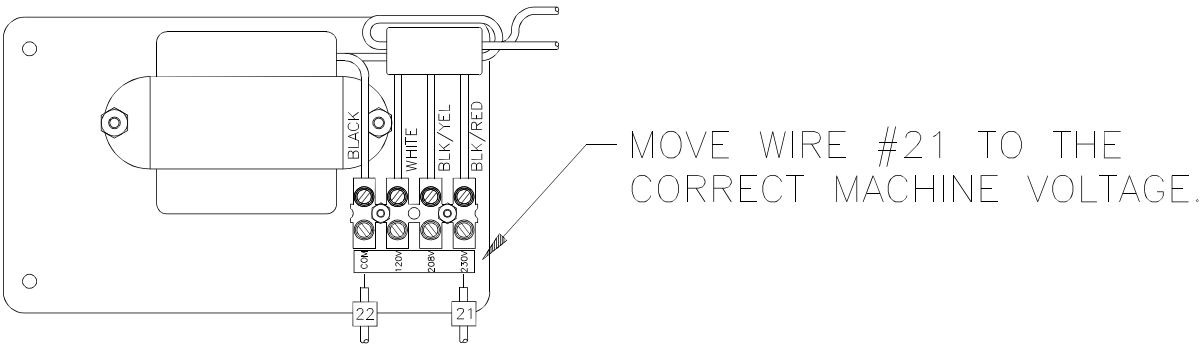

Figure 13

NOTE: The terminal block jumper must be set to the correct location according to the supply voltage of the machine. **Failure to move wire #21 to the proper terminal will cause damage to the machine!**

The power source is connected to the cutter at in the junction box located at the rear, right hand side of the machine.

Power cord connection procedure:

1. Disconnect the power at the main power panel and lock it out to prevent accidental power-up. See Power Lock-Out procedure, page 5.

2. Thread the power cord through the knock-out hole in the junction box located near the floor in the lower left hand corner of the machine rear. Secure it with a conduit connector.

3. Fasten the ground lead to the ground terminal lug found in the junction box.

4. Use wire nuts to join the three power leads to the L1, L2 and L3 leads found in the junction box.

5. Close all doors and guards, unlock the main power and switch it on. The machine should now have power.

6. Press both cut buttons simultaneously to activate the motor and check to make sure it is turning the same direction as the arrow on the motor casing. If it isn't, disconnect the power and simply exchange any two leads of the power cord as in Figure 14. The motor will now turn the correct direction. Double check to make sure.

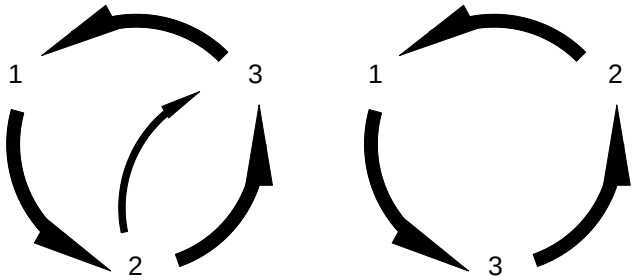

Figure 14

5.7 Power Hook-Up (380/400/415V 50Hz)

For satisfactory operation, be sure that your cutter is wired for the correct phase and voltage and has adequate power. The correct electrical specifications for your machine are shown on the serial plate. Check the machine serial plate before connecting the power. For future reference, transfer this information to the front cover of this manual.

Watch Setup Voltage- Inadequate power to the cutter can be a major source of problems. Too many machines on the same circuit will reduce the power to each machine. Inadequate voltage will frequently cause overheating, loss of power, and in extreme cases, failure to operate. Test your voltage when the shop is at actual working levels. Challenge recommends a dedicated line with a lockable disconnect to provide adequate power for this machine.

CAUTION **CAUTION**: **SHOCK HAZARD! Always disconnect power at main power panel before working on the cutter. Lock it out to prevent accidental power up. (See Power Lockout Procedure page 5).**

Important: You must have an adequate size circuit and heavy enough wiring for this machine. The circuit size should be a minimum of 20% greater than the amperage rating on the machine nameplate. If a wire is run over 75 feet (23 meters), the next size wire should be used. Check local electrical codes.

Electrical Specifications for the 380/415V Titan 265

Volts	Amps	Phase	Hz	Circuit Size	Wire Size	Metric Wire
380/415V	10A	3 PH	50 Hz	20A	#12 AWG	10mm sq.

IMPORTANT: Check the incoming voltage – if it is different from the factory set 415V, the tap on the main transformer must be changed to match the incoming voltage - see Figure 15 for the procedure.

THIS MACHINE IS CONNECTED FOR 415 VOLTS
IF YOUR INCOMING VOLTAGE IS 380V OR 400V – THE TAP ON THE MAIN POWER TRANSFORMER MUST BE CHANGED TO THE PROPER TAP;

FOR 380V (TAPS H4 AND H3)
FOR 400V (TAPS H4 AND H2)

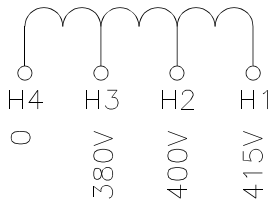

PROCEDURE: LOCATE THE MAIN POWER TRANSFORMER – MOUNTED TO THE SIDE OF THE MACHINE, UNDER THE TOP HOOD, NEAR THE POWER PANEL. LEAVE THE WIRE #4 ATTACHED TO THE "H4" TERMINAL – MOVE WIRE #5 TO THE TAP THAT IS INDICATED FOR THE DESIRED INCOMING VOLTAGE.

THE TAPS LABELED "X1" AND "X4" ON THE OPPOSITE SIDE OF THE TRANSFORMER INDICATES THE SECONDARY SIDE OF THE TRANSFORMER – THESE WIRES MUST NEVER BE CHANGED – THE SECONDARY SIDE IS SET FOR 230V.

Figure 15

The power source is connected to the cutter at in the junction box located at the rear, right hand side of the machine. The power is then run up to the main transformer mounted to the side of the machine, under the top hood.

Power cord connection procedure:

1. Disconnect the power at the main power panel and lock it out to prevent accidental power-up. See Power Lock-Out procedure, page 5.

2. Thread the power cord through the knock-out hole in the junction box located near the floor in the lower left hand corner of the machine rear. Secure it with a conduit connector.

3. Fasten the ground lead to the ground terminal lug found in the junction box.

4. Use wire nuts to join the three power leads to the L1, L2 and L3 leads found in the junction box.

5. Close all doors and guards, unlock the main power and switch it on. The machine should now have power.

6. Press both cut buttons simultaneously to activate the motor and check to make sure it is turning the same direction as the arrow on the motor casing. If it isn't, disconnect the power and simply exchange any two leads of the power cord as in Figure 16. The motor will now turn the correct direction. Double check to make sure.

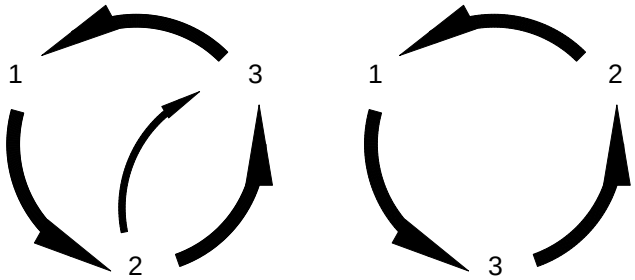

Figure 16

5.8 Line Light

The Titan 265 is equipped with two lights, which provide a line of light on the paper in the approximate location of where the paper will be cut. The lights come on when power to the machine is turned on. The light from each bulb reaches the table after passing between the knife and clamp. Each light is focused with a socket head capscrew see Figure 17

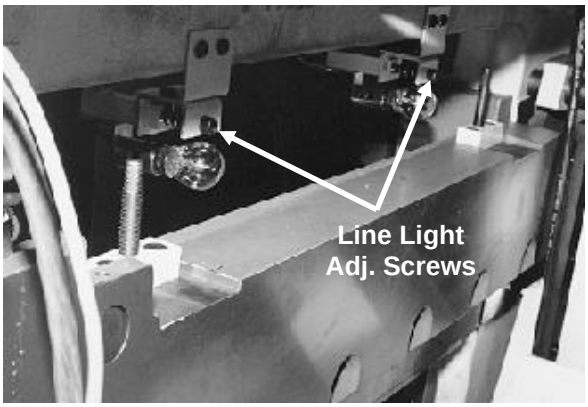

Figure 17

To Adjust:

1. Place a wide sheet of paper on the cut stick to view the line light.

2. Using a 3/16” hex allen wrench, turn one of the cap screws until you see a 1/16-1/8” beam. NOTE: it is best to start by turning the screw clockwise. If the screw turns all the way in before a line appears, begin turning the screw counterclockwise.

3. Similarly, turn the adjustment screw of the other bulb, until one continuous beam is seen across the cut stick.

CAUTION **SHOCK HAZARD! Always disconnect power at main power panel before working on the cutter. Lock it out to prevent accidental power up. See Power Lockout Procedure, page 5.**

Bulb replacement:

1. Make sure power is off (see Power Lockout Procedure, page 5).

2. Remove the old bulb by lightly pushing the bulb into the socket and turning it 1/4 turn counterclockwise. **CAUTION! If the bulb is still hot, allow a few minutes for it to cool.**

3. Insert the new bulb into the socket, push it in and twist it clockwise until the bulb locks into place.

4. Reconnect power and turn the main power switch on. Readjust the line if necessary.

5.9 False Clamp Plate

To prevent marking on pressure sensitive jobs, a false clamp plate is included with your machine. This plate attaches to the bottom of the clamp. It is secured with (3) setscrews located in holes on the lower front face of the clamp.

To install:

1. Make sure the knife and clamp are in the “up” position. If they are not, turn on the power using the red and yellow main power switch and follow the prompts on the screen to send the knife and clamp up.

2. Place the false clamp plate into position on the bottom of the clamp, making sure the locator pins on the false clamp plate slide into the three holes on the bottom of the clamp.

3. While holding the false clamp plate tight against the clamp, tighten the right most set screw located in the front face of the clamp (Figure 18). If the center set screw is accessible below the knife, tighten that screw as well.

4. Place a pile of paper approximately 2” high on the table under the clamp. Then lower the clamp down to the paper using the low pressure clamping feature by pressing the foot pedal.

5. Continue to hold the foot pedal down then tighten the remaining setscrews located in the lower front face of the clamp (Figure 18).

6. Release the foot pedal to allow the clamp to return up.

NOTE: The minimum cut with the false clamp plate attached is 2” (51 mm). A sensor on the clamp detects if the false clamp plate is installed, and thus prevents the backgauge from being positioned less than 2” (51 mm).

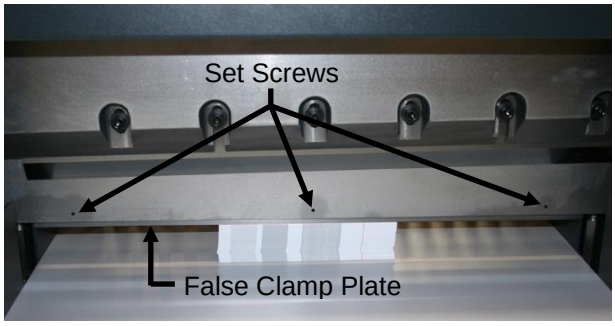

Figure 18

6.0 Operation

IMPORTANT: DO NOT ATTEMPT TO OPERATE YOUR CUTTER UNTIL YOU HAVE THOROUGHLY READ AND UNDERSTAND ALL OF THE INSTRUCTIONS FOUND IN THE OPERATOR AND INSTRUCTION MANUALS INCLUDED WITH YOUR CUTTER. CALL YOUR AUTHORIZED CHALLENGE DEALER IF YOU STILL HAVE ANY QUESTIONS.

Complete operating instructions for all TC Model paper cutters can be found in the TC Touch Screen Control Operating Instructions manual that was included with your machine (Figure 19). If you do not have a copy, or to download the latest version, visit: www.challengemachinery.com/support.

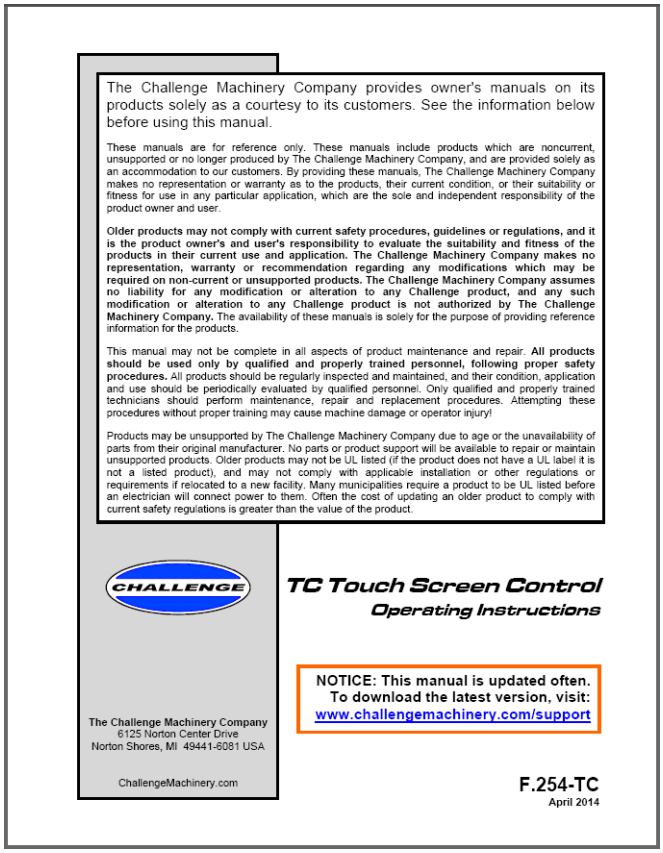

The Challenge Machinery Company provides owner's manuals on its products solely as a courtesy to its customers. See the information below before using this manual.

These manuals are for reference only. These manuals include products which are noncurrent, unsupported or no longer produced by The Challenge Machinery Company, and are provided solely as an accommodation to our customers. By providing these manuals, The Challenge Machinery Company makes no representation or warranty as to the products, their current condition, or their suitability or fitness for use in any particular application, which are the sole and independent responsibility of the product owner and user.

Older products may not comply with current safety procedures, guidelines or regulations, and it is the product owner's and user's responsibility to evaluate the suitability and fitness of the products in their current use and application. The Challenge Machinery Company makes no representation, warranty or recommendation regarding any modifications which may be required on non-current or unsupported products. The Challenge Machinery Company assumes no liability for any modification or alteration to any Challenge product, and any such modification or alteration to any Challenge product is not authorized by The Challenge Machinery Company. The availability of these manuals is solely for the purpose of providing reference information for the products.

This manual may not be complete in all aspects of product maintenance and repair. **All products should be used only by qualified and properly trained personnel, following proper safety procedures.** All products should be regularly inspected and maintained, and their condition, application and use should be periodically evaluated by qualified personnel. Only qualified and properly trained technicians should perform maintenance, repair and replacement procedures. Attempting these procedures without proper training may cause machine damage or operator injury!

Products may be unsupported by The Challenge Machinery Company due to age or the unavailability of parts from their original manufacturer. No parts or product support will be available to repair or maintain unsupported products. Older products may not be UL listed (if the product does not have a UL label it is not a listed product), and may not comply with applicable installation or other regulations or requirements if relocated to a new facility. Many municipalities require a product to be UL listed before an electrician will connect power to them. Often the cost of updating an older product to comply with current safety regulations is greater than the value of the product.

CHALLENGE

TC Touch Screen Control
Operating Instructions

NOTICE: This manual is updated often.
To download the latest version, visit:
www.challengemachinery.com/support

The Challenge Machinery Company
6125 Norton Center Drive
Norton Shores, MI 49441-6081 USA

ChallengeMachinery.com

F.254-TC
April 2014

Figure 19

7.0 Knife Installation/Changing

⚠ CAUTION Changing knives can be very dangerous unless safety precautions are observed and extreme care is taken when handling knives.

- Make sure knife lifters are properly installed, see instructions following.
- Keep handling of unprotected knives to an absolute minimum.
- Clear off cutter table before removing knife.
- Have scabbard on cutter table and insert knife immediately.
- Warn people of any unprotected knife.
- Knife changing is a **ONE PERSON OPERATION**. Having more than one person trying to change knives invites accidents.

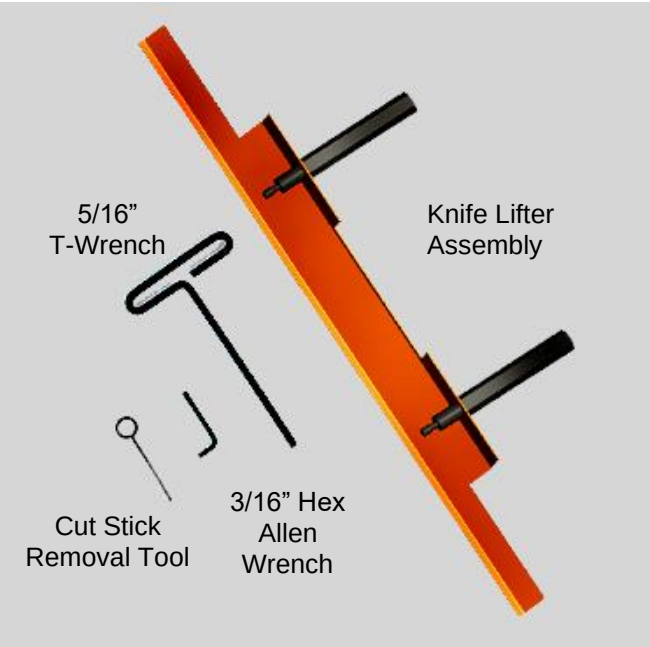

Figure 20 – Knife Changing Equipment

The knife changing equipment shown in Figure 20 is included in the cutter tool kit. The following instructions show how to remove and install a new or re-sharpened knife. Read through these instructions AT LEAST ONCE before attempting to actually change or install any blades.

7.1 Knife Removal

1. Make sure the knife and clamp are in the “up” position. If they are not, turn on the power using the red and yellow main power switch and follow the prompts on the screen to send the knife and clamp up.

2. Turn the power off and lockout power to machine, see Power Lockout Procedure, page 5.

3. Back off the knife adjusting screws on top of the knife bar several turns (Figure 21). A new knife will cut deeper than one that has been ground several times. Failure to back off the screws could damage the knife and/or the cutting stick.

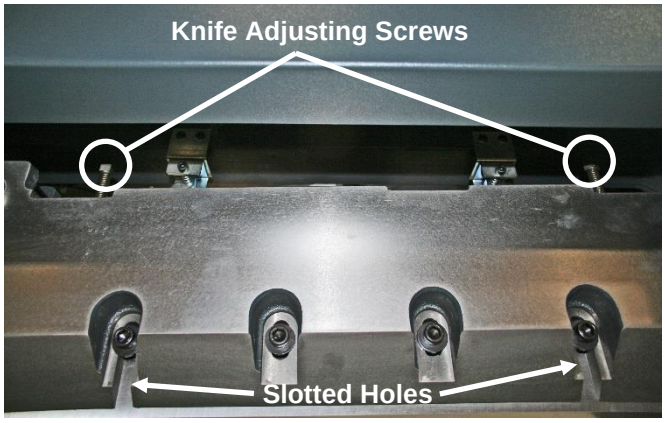

Figure 21

4. Remove the knife bolts from the two slotted knife bar holes (Figure 21) and replace with the knife lifters (Figure 22). Tighten the lifters to hold the knife in place, and then remove the remaining knife bolts.

Figure 22

5. Clear the table surfaces and place the empty knife scabbard on the table. Remove the scabbard's knife retaining screws.

6. Grasp the knife lifters firmly and, at the same time, turn them counterclockwise to release the knife from the knife bar. Lower the left end first, then lower the right end as you shift the knife sideways to the left. Bring the right end of the knife out from the machine. Shift the knife to the right and bring out the left end. Put the blade in the scabbard immediately and secure the knife retainer screws.

7.2 Knife Installation

⚠ CAUTION Knives are heavy and always very sharp! Be sure to keep the edge away from your body and keep other people out of the area while handling the blade. Severe lacerations or dismemberment could result from careless handling procedures.

1. Make sure the knife and clamp are in the "up" position. If they are not, turn on the power using the red and yellow main power switch and follow the prompts on the screen to send the knife and clamp up.

2. Turn the power off and lockout power to machine, see Power Lockout Procedure, page 5.

3. Rotate or replace the cut stick (see Section 7.3.2 Cut Stick page 27).

4. Remove the left retainer screw from the new blade and screw the knife lifter assembly into the new blade. Screw the lifters all the way in and then back them out a 3/4 turn).

5. Remove the other scabbard retainer screw.

6. Double check to make sure the knife adjusting screws have been backed out all the way (Figure 21, page 24). Guide the blade, left edge first, into the space between the knife bar guide frames on the left. Move the right end of the blade into the machine, under the knife bar slot. Align the lifters with the slots in the knife bar, raise the knife into the knife bar slot as high as it will go and tighten the lifters.

   NOTE: If the blade will not go in, either the lifters are screwed into the blade too far, or the end of the blade is hitting the cylinder bracket at the right end of the knife slot. In this case, drop the left end when inserting the knife.

7. Insert the knife bolts with washers and snug to hold the knife, but don't tighten them yet.

8. Remove the knife lifter assembly and replace with bolts and washers.

9. Place a few sheets of paper over the cut stick, covering the stick end-to-end.

10. Restore power to machine and turn power on.

11. Go to the MAINTENANCE screen and choose KNIFE ADJUST. Choose KNIFE DOWN, then press and hold the cut buttons to send the knife to the down position.

12. Turn the power off and lockout power to machine.

13. Turn the knife adjusting screws (Figure 23) down evenly, a little at a time, until the knife cuts through the bottom sheet of paper the entire length of the cutting stick. Turning the screws down evenly prevents uneven wear on the knife and cutting stick.

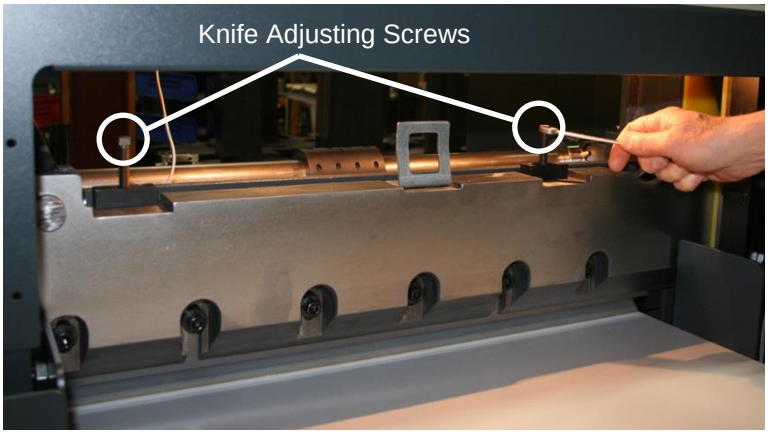

Figure 23

14. Restore power to machine and turn power on.

15. Follow the prompts on the screen to send the knife and clamp up.

16. Turn the power off and lockout power to machine.

17. Tighten all knife bolts securely.

18. Restore power to machine and turn power on. Make a test cut through a full lift of paper and make minor adjustments if necessary by repeating steps 9 through 17. **NOTE:** If the knife ends cut but the middle doesn't, you could have dips or uneven spots in the knife and/or cutting stick. These can be eliminated by placing 1/2" strips of paper in the table slot beneath the cutting stick to shim it.

19. Send the dull knife to a knife grinder. Do not attempt to sharpen your own knives! See the Knife Care Tips Section below to determine the knife bevel angle.

7.3 Knife Care Tips

⚠ CAUTION **! KNIFE SAFETY** ! Knives are **DANGEROUS!!!** They are heavy and very sharp, even after use. Keep the edge away from your body and keep the area clear of others when handling knives. Never touch the cutting edge! To prevent personal injury and damage to the knife, always keep knives in their holders with screws tightened. You are aware of the dangers, but others may not be. Never attempt to hone, polish, or service the knife in any way. Failure to follow safety procedures may result in severe lacerations or dismemberment.

7.3.1 Knife Blade Life

Knife blade life, or the time between sharpenings, can be affected by many factors. One important factor is the type of paper being cut. Abrasive paper, such as recycled paper, soft paper such as newsprint paper, and bound books can all significantly shorten knife blade life. Also, if the knife depth is set too deep, the knife will cut too deep into the cutting stick and can dull the knife blade.

A knife can last between 2,000 and 5,000 cuts before it needs to be sharpened. Cutting soft paper (such as newsprint paper) or paper with high post-consumer recycled content can cause the knife to need sharpening after only 2,000 to 3,000 cuts. Cutting pure paper, such as bond paper with no recycled content, or hard paper can allow the knife to be used for as many as 5,000 cuts before it needs to be sharpened. In all cases, the operator should continually check the quality of the cut to determine when the knife blade needs to be sharpened. Some characteristics that indicate a blade needs sharpening are:

- The knife hesitates or stalls while making a cut.
- The sheets are not all cut to the same length (usually the top few sheets are longer than the rest of the sheets - this is sometimes called "draw").
- Cut marks appear on the cut face of the paper.
- The profile of the cut (side view) is not perpendicular to the table.
- The cut does not appear straight when viewed from the top.
- The knife makes a "rougher" sound as it passes through paper.
- Nicks are visible on the cutting edge of the knife.

7.3.2 Cut Stick

The cut stick should be changed or rotated at every knife change. It may require changing more often if deep grooves or jagged edges can be seen along the score marks. A worn cut stick can negatively affect cut quality.

Procedure to change or rotate cut stick

1. Turn the power off and lockout power to machine, see Power Lockout Procedure, page 5.
2. Locate the Cut Stick Puller provided with the machine. The cut stick puller has a finger hold and hook (Figure 24).

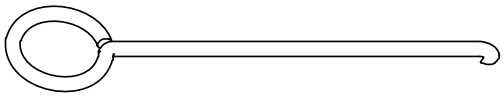

Figure 24

3. Hook the Cut Stick Puller over the right end of the cut stick with a finger in the loop of the puller. With the Cut Stick Puller at a slight angle over the cut stick lift the puller straight up until the end of the cut stick comes out of the table. Remove the remainder of the cut stick from the table by hand.
4. Inspect the cut stick for wear. It may be used a total of 8 times (twice on each surface) before replacing. To use a surface twice, reinstall the cut stick by turning it such that the end that came out of the right end of the slot goes into the left end of the slot. If a surface has been used twice, rotate the stick to an unused surface (Figure 25). If all (4) surfaces have been used twice, replace the stick with a new one. New cut sticks can be purchased from your authorized Challenge dealer.

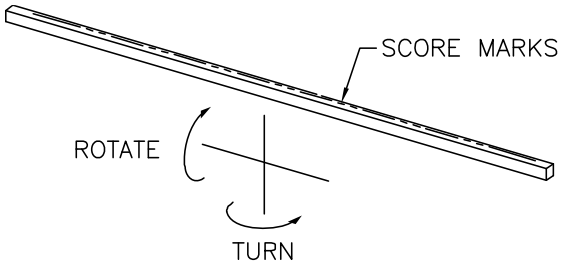

Figure 25

5. Firmly press the new or rotated cut stick all the way down into the slot. The top of the cut stick should be flush with the table. If the cut stick is not level or flush with the table, place 1/2” wide strips of paper in the table slot under the cut stick to raise it slightly.

7.3.3 Bevel Angle

Challenge recommends that bevel angles for the Titan 265 knives be in the range of 21° to 23°. In general, a 21° bevel angle will provide better cut quality when cutting soft paper (such as newsprint), recycled paper, or bound books. However, 21° angle knives can become dull sooner than 23° knives, which results in shorter knife blade life. A knife with a 23° bevel angle, on the other hand, will not dull as easily, and can provide satisfactory results when cutting most types of paper. Knives shipped with the Titan 265 from the factory have a bevel angle of 23°.

7.3.4 Helpful Suggestions

- If your establishment is large enough to purchase more than one set of knives, have one set beveled at 21° and the other at 23°. Note: A set consists of 3 knives: one in the machine, one as a back up, and one at the grinder.

- If the machine seems to strain but the cut quality is still good, reduce the pile height. You may also carefully apply glycerin to the bevel when cutting hard, coated paper. Tie a cloth to the end of a stick; dip the stick in glycerin, and apply. Never apply by hand! In lieu of glycerin you may lightly rub white bar soap along the bevel. Lubrication will prolong the life of your machine and reduce maintenance.

7.3.5 Knife Care

- To prevent corrosion, knives are coated with light oil. It should be REMOVED WITH CARE.

- While removing or installing a knife, be careful not to allow the edge to bump against the machine. Nicks will result.

- If a knife bolt is damaged, replace it.

- Always keep knife bolts securely tightened.

- Always use the heavy-duty knife bolt washers provided by Challenge. Failure to do so could result in scratching or marring of the clamp face.

- Store knives in a dry environment to prevent corrosion.

- Never attempt to service a knife in any way.

Maintenance Section

⚠ NOTICE ⚠

The instructions on the following pages are for the use of trained service personnel only!

Attempting to perform repair and replacement procedures without proper training may cause machine damage or operator injury!

PARTS CUSTOMERS: Parts with the express understanding that they are to replace parts found missing or no longer serviceable on equipment designed and/or manufactured at Challenge. The Challenge Machinery Company assumes no liability for any modification or alteration to any Challenge products, and any such modification or alteration to any Challenge product is not authorized by The Challenge Machinery Company. Any modification or alteration of any Challenge product will void any remaining warranty.

NOTES:

8.0 Cleaning

Before cleaning inside machine turn off and lockout power, page 5.

Hydraulics

1. The vent fans should be wiped off weekly to maintain maximum cooling of the hydraulic system.

2. The hydraulic manifold, fittings, and hoses should be wiped off weekly to maintain maximum cooling. Remove then replace panels as necessary.

Table

1. The front table should be wiped down periodically. Use a non-abrasive cleaner along with a protective wax.

2. The rear table cover may be cleaned with glass cleaner or a mild water based detergent. Some petroleum-based solvents may damage the Plexiglas.

Console

1. The console should be cleaned with a mild water based detergent applied to a damp cloth or paper towel. Petroleum based solvents **will** damage the console.

Machine Exterior

1. The machine's exterior should be cleaned with a non-abrasive water based detergent applied to a damp cloth.

2. Always be careful when cleaning around safety warning labels. Use limited amounts of cleaners in those areas.

9.0 Lubrication

A clean, lubricated machine will cut more accurately, run longer, with less downtime, and fewer repairs.

Schedule lubrication maintenance both early in the day and early in the week. This allows the lubricants to work into the machine. Lubrication at the end of the day or week allows the lubricants to run off without any benefit to the machine.

Clean off dirty, excess grease. Clean accumulated dust off valves, hoses, and connections. Dust build-up increases operating temperatures and causes premature wear of all hydraulic components.

Oil and grease **WEEKLY** as described below.

When necessary, send the knife down by choosing “MAINTENANCE” and then “KNIFE CHANGE” on the TC touch screen. Select “Knife Adjust Mode” then press and hold both cut buttons until the knife and clamp reach the table. Now release the buttons (the knife and clamp should stay down).

DISCONNECT THE POWER AND LOCK IT OUT, (See Power Lockout Procedure on pg. 5).

Most moving parts require lubrication. Remove all panel covers and look for all oil locations (marked with red paint). Make sure oil holes are not plugged and lubricate with a 30 weight oil. See the photos below for critical locations (not all locations are illustrated here). Notice that some are oil locations and some are grease points. Wipe off old and excess grease. Use a National Lubricating Grease Institute No. 2 consistency, extreme pressure grease.

⚠ CAUTION **Replace all guards before operating. Never operate cutter with any guards removed.**

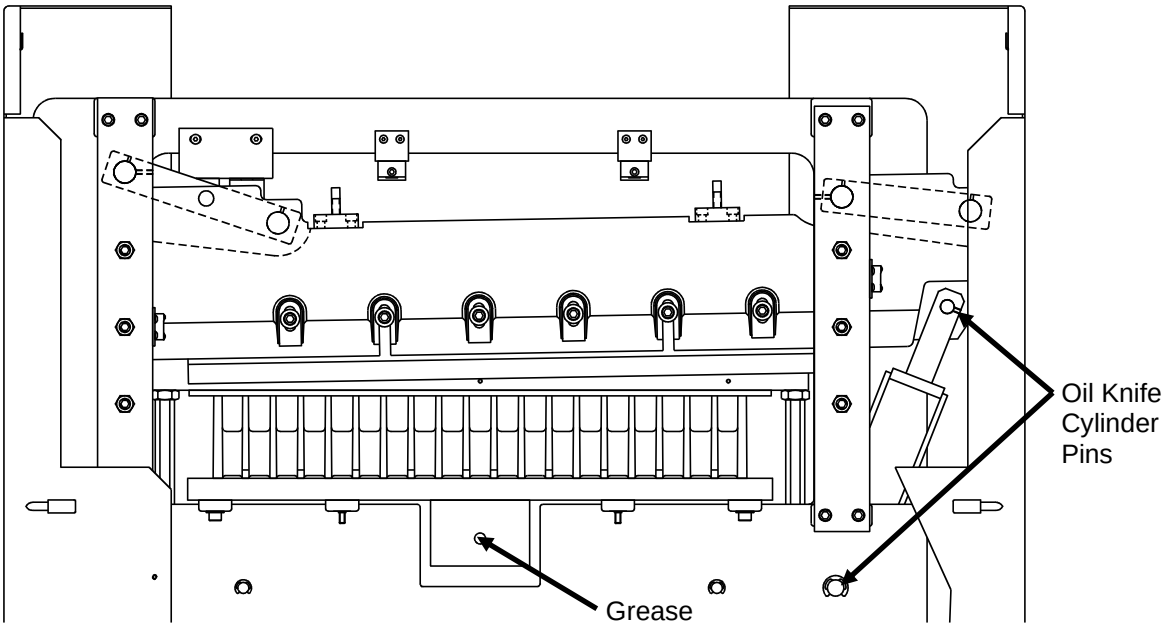

Figure 26

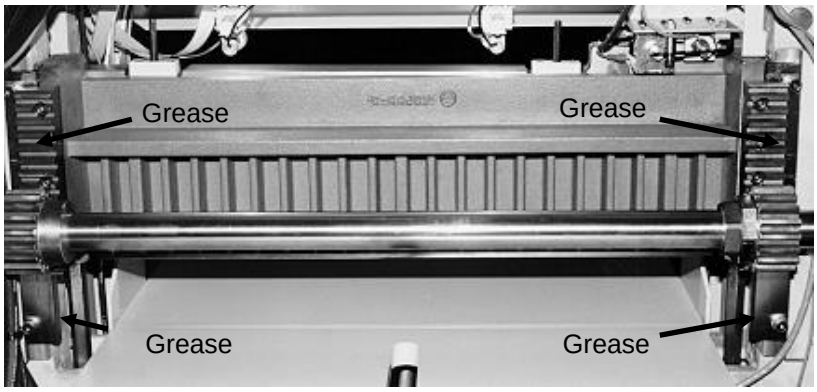

Figure 27 – Clamp Gibs and Rack & Pinion

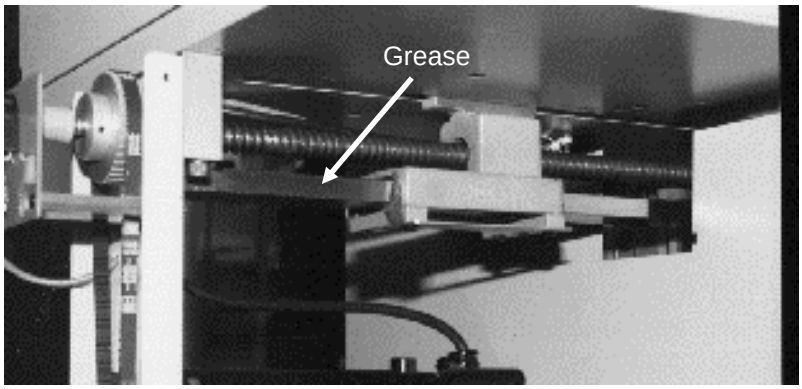

Figure 28 – Backgauge Guide

10.0 Hydraulic System

The Titan 265 Cutter has both hydraulic cutting and hydraulic clamping operation. The cutter is powered by an electric motor coupled directly to a hydraulic pump. The clamp action is powered by a hydraulic cylinder. When the cut buttons are depressed, this cylinder moves the clamp down (or brings the clamp up to full hydraulic pressure if the manual foot clamp is down). The cutting action is also powered by a hydraulic cylinder that moves the knife bar down. The knife sequence valve generates 1,200 PSI of back pressure throughout the system to maintain full clamp pressure during the cut. One advantage of the hydraulics is the immediate return of the knife when the cut buttons are released.

Check the level of the hydraulic reservoir **WEEKLY** or whenever the machine sounds like it is laboring (this could be due to low oil level). To check, remove the lower rear cover and look at the sight gauge on the rear side of the hydraulic tank (Figure 29).

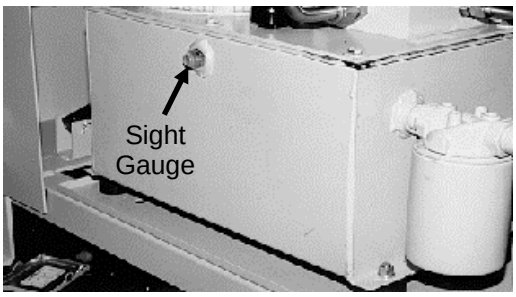

Figure 29

Fluid should just be visible in the sight gauge. Add fluid if necessary, but avoid overfilling. Use only the recommended fluid type as described in Section 10.1 below. Replace the panel.

The hydraulic tank, fan, manifold, and fittings should be wiped off **WEEKLY** to maintain maximum cooling of the tank/hydraulic oil.

The hydraulic fluid should be changed **YEARLY** or EVERY 1,000 HOURS of operation.

The oil filter (Challenge part H-227-1) should be changed **YEARLY** or whenever any repairs are made to the hydraulic system.

NOTE: Failure to change the oil and filter when needed can damage the seals in the clamp and knife cylinders.

10.1 Recommended Hydraulic Oil

Use only ISO (International Standards Organization) Viscosity Grade 46, rust, oxidation, and foam inhibiting, non-detergent hydraulic oil. **Oils other than the recommended type will cause seals, cups, and O-rings to deteriorate.** The proper hydraulic oil can be purchased in 5 gallon containers from your authorized Challenge Dealer using the Challenge part number: **S-1991-3**.

⚠ CAUTION **NEVER USE Automatic transmission oil or brake fluid as a substitute! Oils other than the recommended type will cause seals, cups, and O-rings to deteriorate. Unsafe operations conditions will result.**

10.2 Changing the Hydraulic Oil

The oil and filter should be changed **AT LEAST ONCE-A-YEAR** or after every 1,000 hours of operation.

The oil filter (Challenge part H-227-1) should be changed **YEARLY** or whenever any repairs are made to the hydraulic system.

NOTE: Failure to change oil and filter when needed can damage seals in the cylinders, pump, and valves.

⚠ CAUTION Only change oil when it is cold. Burns could result from changing hot oil.

Before beginning, you will need an empty five gallon bucket, three oil pans or more, a funnel and an assistant. If oil is hot, wait until it cools.

1. Make sure main power switch is off and disconnect power to the machine and lock it out.
2. Remove the lower rear cover
3. Unscrew and remove the breather cap from the top of the tank (Figure 30).

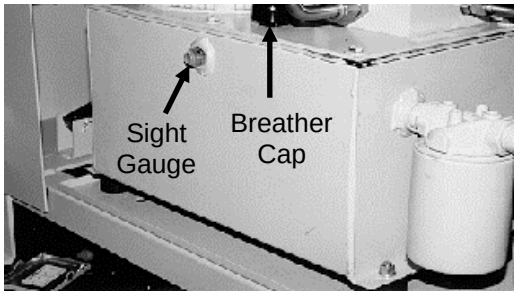

Figure 30

4. Using a hand drill and transfer pump commonly found at hardware and home improvement stores, transfer the used oil to empty container.
5. Replace the oil filter. Place a thin film of new hydraulic oil on the seal of the new filter to insure a proper seal. Firmly hand-tighten the filter onto the filter head.
6. Using the transfer pump, fill the tank with 5 gallons of the recommended fluid (See Section 10.1 above). Make sure the level is just above the sight gauge shown in Figure 30.
7. Re-install the breather cap.
8. Before turning on the machine, make sure all hydraulic hose fittings are tight.
9. Turn on main power to the machine. Make several a cut cycles and inspect the hydraulic system for leaks. If leaks are found, turn off main power to the machine and tighten any leaking fittings.

10.3 Hydraulic Valve Adjustments

⚠ CAUTION Several of the following tests require the machine to be operational for checking and adjusting. Be very careful that tools and other people are clear of moving parts and that the cutter is not accidentally operated while adjustments are being made. Disconnect the power and lock it out, (see Safety Precautions, page 5) whenever working on the machine unless the directions specifically require the machine to be powered.

NOTE: Pressure settings fluctuate with oil temperature. **Set pressures when the oil is hot.**

Pressure Settings:

1. Main System Relief Pressure — 2,000 psi.
2. Knife Down Sequence Pressure — 1,200 psi.
3. Clamp/Knife up Sequence Pressure — Visual.
4. Clamp Pressure — 400-900 psi.

Notes:

- To access hydraulic gauges and valves, remove the lower front cover panel.
- To adjust valves, loosen hex jam nut, then make adjustments by turning the adjusting screw with a hex allen wrench.
- On all valves, turning in (clockwise) increases pressure; out (counter-clockwise) decreases pressure.

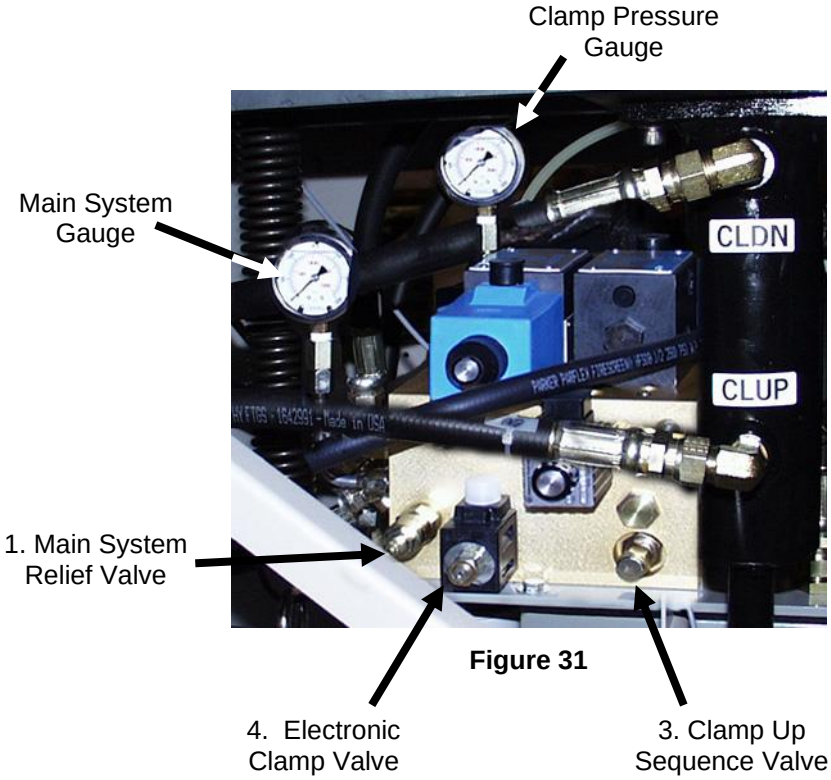

Figure 31

1. MAIN SYSTEM RELIEF PRESSURE: Use the “Knife Change” feature found in the Maintenance pull-down menu to send the knife and clamp down. Read the pressure on the main system gauge when the knife is bottomed on the table. Adjust the main system relief valve (Figure 31) to obtain a reading of 2,000 psi. It may be necessary to send the knife down several times.

2. KNIFE DOWN SEQUENCE PRESSURE: Begin a cut cycle and read the knife sequence pressure from the main system gauge as the knife is traveling down (after the clamp reaches the table). The pressure should read 1,200 psi. If necessary, adjust the knife sequence valve (Figure 32) to obtain the proper reading.

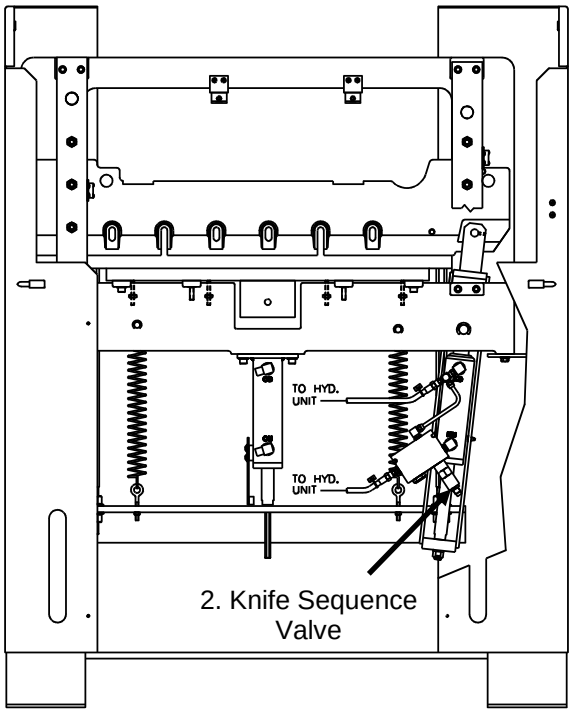

Figure 32

3. CLAMP UP SEQUENCE PRESSURE: Activate a cut cycle and visually inspect the motion of the knife and clamp. The clamp should not lift off the table until the knife is all the way up. If it does, increase the sequence pressure by adjusting the clamp up sequence valve (Figure 31).

4. ELECTRONIC CLAMP PRESSURE SETTING: The electronic clamping control allows the convenience of changing the clamp pressure at the control console, as well as the ability to program different clamp pressure settings within programmed jobs. The clamp pressure is controlled by use of a slide bar on the TC touch screen located at the lower left corner of the screen. A number between 0 and 15 will be displayed, indicating the current pressure setting (0 being the lowest, 15 the highest). To adjust the actual clamp pressures at the minimum (0) and maximum (15) settings, follow the procedure below:

   On the TC touch screen, select the Maintenance pull-down menu then choose Setup. Then select the Service Info tab, and in the box for Enable Tabs Code, enter **6125**. Now select the Hydraulic Settings tab. The screen should look similar to Figure 33:

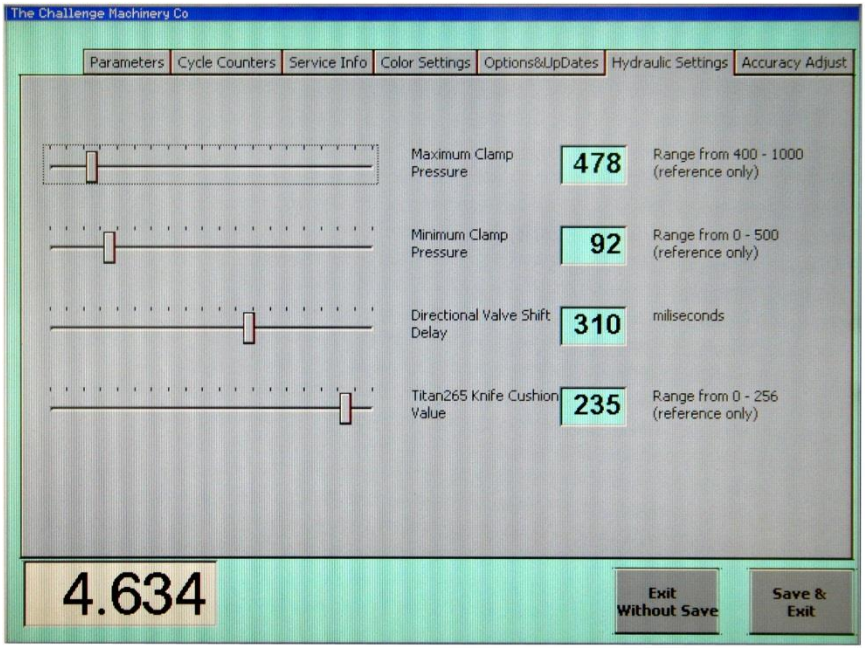

Figure 33

To set the maximum clamp pressure, first make sure the correct slide bar is “active” by touching the appropriate slider button. Now press both cut buttons, and after the clamp has contacted the table and while the knife bar is coming down, read the pressure on the right hand pressure gauge. It should be set at 900 psi. If not, adjust the maximum clamp pressure slider button higher or lower and re-check the clamp pressure reading on the gauge. Repeat until the pressure is properly set at 900 psi.

To set the minimum pressure, first make sure the correct slide bar is “active” by touching the appropriate slider button. Now press both cut buttons, and after the clamp has contacted the table and while the knife bar is coming down, read the pressure on the right hand pressure gauge. It should be set at 400 psi. If not, adjust the minimum clamp pressure slider button higher or lower and re-check the clamp pressure reading on the gauge. Repeat until the pressure is properly set at 400 psi.

To adjust the directional valve shift delay, first make sure the correct slide bar is “active” by touching the appropriate slider button. Move the slider button all the way to the right. Now make a complete cut cycle by pressing and holding the cut buttons throughout the entire cycle. Watch the motion of the knife bar. When the knife bar reaches the bottom of its stroke, you should notice a delay before the knife bar begins its upward motion. Decrease this delay by moving the slider button slightly to the left. Continue making cuts and checking the delay each time you move the slider button. Stop moving the slider button once the delay is mostly eliminated. If you go too far to the left, you will hear an unusual “clunk” sound when the knife begins its upward motion. If this happens, you will need to move the slider bar back to the right until the clunk sound has disappeared.

To adjust the knife cushion value, first make sure the correct slide bar is “active” by touching the appropriate slider button. The knife cushion can be described as a slight slowing down of the knife bar at the top of its stroke – thus providing a “cushion” effect. To increase the amount of cushion, move the slider button to the right. To decrease the amount of cushion, move the slider button to the left.

When finished, press Save and Exit.

11.0 Adjustments

CAUTION **Several of the following tests require the machine to be operational for checking and adjusting. Be very careful that tools and other people are clear of moving parts and that the cutter is not accidentally operated while adjustments are being made. Whenever working on the machine, disconnect the power and lock it out (see SAFETY PRECAUTIONS, page 5) unless the directions specifically require the machine to be powered.**

11.1 Electric Eye Alignment

If the electric eyes are not in alignment, or if they become out of alignment during a cut cycle due to vibration, the machine will see them as blocked and will cease any downward motion.

To check if the electric eyes are aligned properly, turn on the power switch and look at the indicator light pattern on the receiver (left hand unit). If the eyes are functioning properly and aligned properly, and if there are no obstructions, the light pattern will look like the one shown in Figure 34 below.

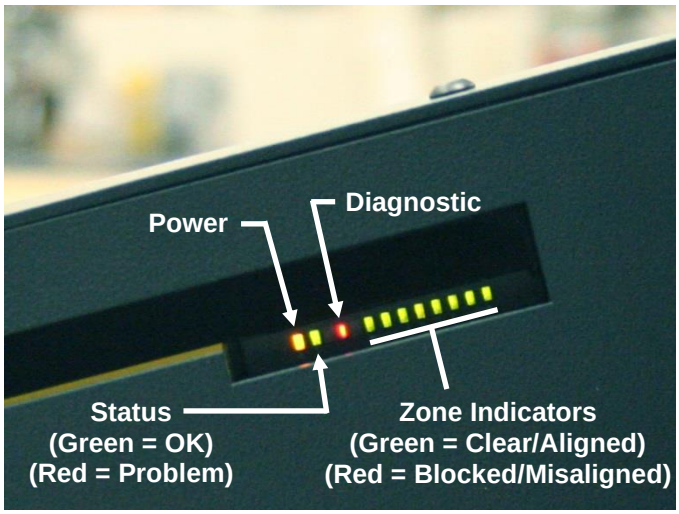

Figure 34 – Electric Eye Indicator Lights

To simulate the vibration caused by a normal cut cycle, gently tap on the electric eye housings one at a time with your hand. Watch the indicator lights to see if any of them change.

If the status light or any of the zone indicator lights are red, this indicates an obstruction. However if there are no physical obstructions blocking the eye beams, then most likely the electric eyes are out of alignment. To adjust:

1. Remove the inner housing covers from both eye housings.

2. Loosen the outer mounting screws (Figure 35) to adjust the eye beam units until they are aligned over their length.

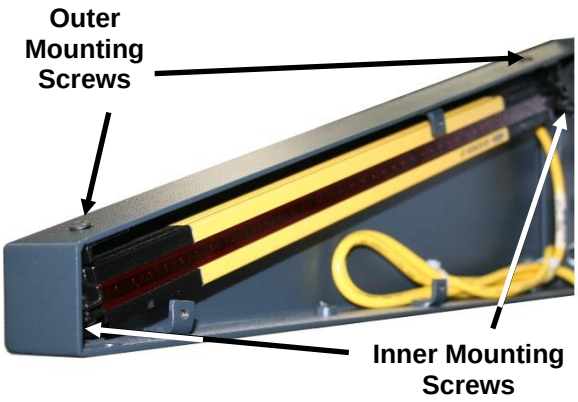

Figure 35

3. Loosen the inner mounting screws (Figure 35) to rotate the beams until they are aligned over their width. When the indicator lights indicate proper alignment as shown in Figure 34, tighten all screws.

4. Replace the inner housing covers and re-check the alignment as indicated above.

11.2 Backgauge Gib Adjustment

If the backgauge does not stay squared or jumps up and down when jogging paper against it, the backgauge gib screws are probably loose or worn.

To Adjust:

1. Send the backgauge near the rear of the table.

2. Turn off the power and lock it out, page 5.

3. Remove the leadscrew cover under the table.

4. Loosen the side gib setscrews and the bottom guide screws (Figure 36).

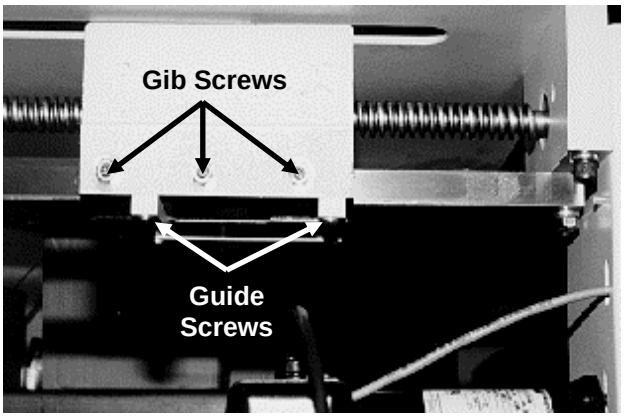

Figure 36

5. Tighten the bottom guide screws until they touch the guide then back off 1/8 turn. Do not over-tighten or they could cause the backgauge to bind.

6. Turn the side gib screws in until they just touch the guide. The backgauge should not be able to rock side to side. Lock in position with the jam nuts.

7. Run the backgauge back and forth the length of the table using the backgauge control. Check for any binding. Readjust if necessary.

NOTE: The screws should be tightened to hold the backgauge square against the guide rail. Excessive tightening will cause the backgauge to bind and cause premature wear of all components.

11.3 Squaring the Backgauge

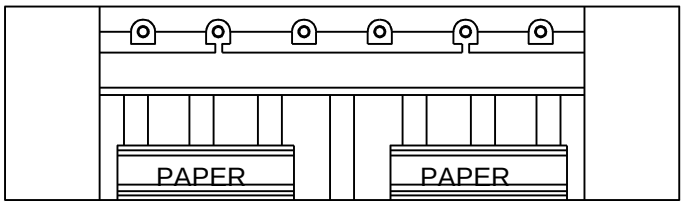

Figure 37

To test the backgauge for squareness, place a small lift of paper against the left side of the backgauge (but not against the side guide) and make a cut.

Now, leave the backgauge in the same position, flip the lift over and against the right side of the backgauge (but not against the side guide). Make another cut to see if any of the stock will trim off. Run two checks, one starting on the left and moving to the right, the other, moving from the right to the left. Trim in either sequence indicates the backgauge is out of square.

1. Make sure the backgauge gibs are set properly (see previous section). Then follow steps 2 through 5.

   NOTE: Backgauge gib adjustment is not necessary on initial machine setup as gibs have been adjusted at the factory.

2. Loosen the jam nuts on the backgauge adjusting screws (Figure 38).

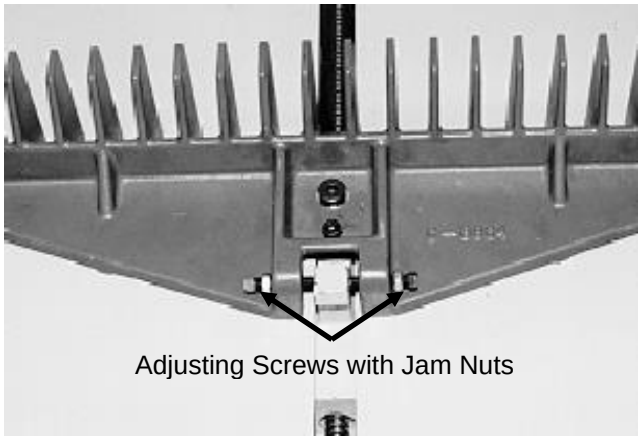

Figure 38

3. Back off the adjusting screw on the side that the trim occurred and tighten the other.

4. With the squaring screws tight, make another test. Continue to adjust and test until no trim occurs when testing in either sequence.

5. Tighten the jam nuts and lock screw.

6. Replace rear table cover.

NOTE: Once the backgauge is square, restore power to the machine and check the backgauge accuracy to make sure it is accurate (see next section).

11.4 Backgauge Position Accuracy Adjustment

If the backgauge position readout does not match the actual measurement between the knife and the backgauge, the cutter must be re-calibrated.

The accuracy can be checked by comparing cut sheets of paper. This process is described below.

NOTE: The backgauge gibs should be adjusted and the backgauge squared before attempting to adjust accuracy.

1. Place a 1/4 to 1/2 inch (5 to 13mm) pile of 8-1/2 X 11 (A4) paper against the center of the backgauge.

2. Trim cut lengthwise and rotate 180^0. Using the backgauge position readout, bring the paper up to the 10" (254mm) position and make a cut. Move the backgauge up to 5" (127mm) and make another cut.

3. Take several sheets from the center of each lift and compare them to each other. The encoder system on your cutter will space accurately between your 10” (254mm) and 5" (127mm) cuts, whether the overall accuracy is correct or not. The stack of paper between the 10” (254mm) and 5" (127mm) cuts will be a true 5", but the paper left against the backgauge will not- if the backgauge position readout is off.

4. If the backgauge position readout is off, you will have to adjust the accuracy. On the TC touch screen console, select Maintenance, then Setup. Then select the Service Info tab and in the box for Enable Tabs Code, enter **6125**. Now select the Accuracy Adjust tab and follow the instructions on the screen. You will be asked to cut a sample pile, measure it, and then key in the actual measured value. Press Save and Exit when finished.

5. Run the backgauge back several inches, then bring it forward through the 3.750" (95 mm) preset dimension, then repeat steps 1-3 again.

11.5 Clamp Height and Level Adjustment

The clamp height and level need not be adjusted on a new machine setup. If the bottom edge of the clamp does not measure 4” without false clamp plate (3-3/4” with false clamp plate) from the table surface on each end of the clamp, then it should be adjusted for optimal cutting performance.

Clamp Height Adjustment Procedure:

1. Make sure clamp and knife are in the up position. Turn the machine off and lock out power, page 5.

2. Remove the bottom front cover and the top rear cover.

3. Loosen one end of the rack & pinion shaft coupling from the rear of the machine (Figure 39).

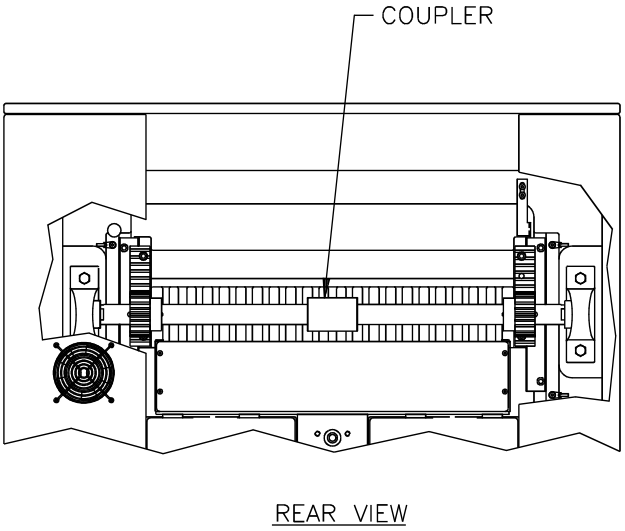

Figure 39

4. Loosen the bottom nut at the bottom end of each clamp pull down tie rod (Figure 40).

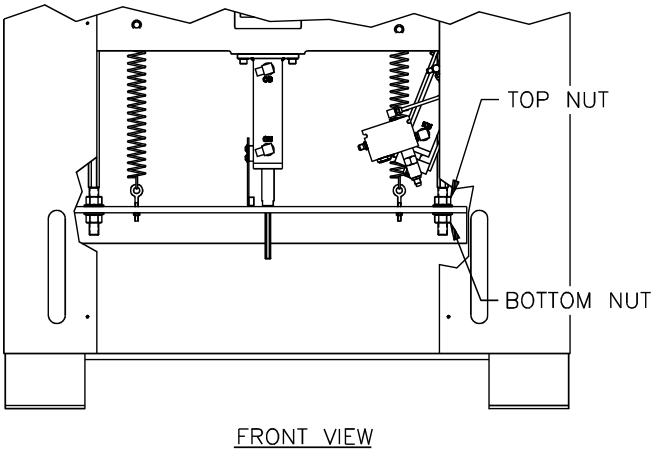

Figure 40

5. Adjust the top nut at the bottom end of each clamp pull down tie rod until a 4” (3-3/4” if false clamp plate installed) height is measured at each end of the clamp.

6. Tighten each bottom nut at the bottom end of pull down rods.

7. Tighten the rack & pinion shaft coupling.

8. Recheck the clamp height in case tightening the linkage moved it out of adjustment. If the clamp has moved out of adjustment, repeat steps 3 through 7 as necessary.

9. Once a satisfactory setting has been obtained, replace all covers and unlock the power source.

Clamp Leveling Procedure:

Remove the knife, false clamp plate and the cut stick. Place a 2” wide strip of paper under the left and right hand side of the clamp. Access the Knife Adjust menu in the “Maintenance Section” and cycle the clamp and knife to the down position. Pull on the paper strips; if one pulls out, that side will have to be adjusted. NOTE: Keep the adjustments small so the clamp will remain at 4”

1. Turn the machine off and lock out power, page 5.
2. Remove the bottom front cover and the top rear cover.
3. Loosen one end of the rack and pinion shaft coupling (Figure 39).
4. Loosen the clamp rod bottom nut on the side of the clamp that doesn’t hold paper.
5. Adjust the top clamp rod nut until the paper is held tight.
6. Tighten the bottom nut, then recheck the paper. Readjust if necessary.
7. Tighten the rack and pinion shaft coupling.

11.6 Pre-Clamp Pressure Adjustment

The pre-clamp feature of the Titan 265 uses low-pressure pneumatics to bring the clamp down prior to making a cut. The system pressure is set at the factory and allows for safe and proper operation of the clamp. It should not be necessary to adjust unless the clamp does not come down all the way to the table after pressing the foot pedal. If this is the case follow these instructions to adjust:

1. Remove lower front cover and locate the pneumatic pressure adjustment knob (Figure 41).

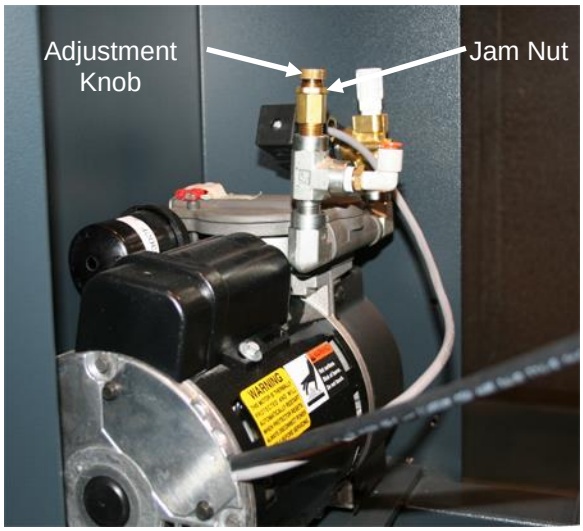

Figure 41

2. Loosen jam nut.

3. Increase the pressure by turning the valve clockwise until the clamp is able to travel down to the table completely when pressing the foot pedal switch.

4. Check to make sure the force under the clamp does not exceed 66 lbs (30 kg). A scale, such as a bathroom scale, should be used to measure this. If the force exceeds 66 lbs (30 kg), decrease the pressure by turning the valve clockwise until the force is below 66 lbs (30 kg).

5. Tighten the jam nut on the pressure control valve.

6. Replace covers.

11.7 Knife Latch Adjustment

The knife latch prevents the knife edge from drifting down while the machine is not in operation. The knife latch height must be set properly in order for the machine to function properly and to prevent the knife blade edge from becoming exposed.

⚠ CAUTION Failure to adjust the knife latch properly could result in the knife blade edge being exposed at times other than normal operation. Serious injury could result.

Follow these instructions to adjust:

1. Make sure the knife is all the way up and has not drifted down by performing a cut cycle.

2. Turn the machine off and lock out power, see page 5.

3. Remove the upper rear cover of the machine and locate the knife latch assembly.

4. Check the gap as shown in Figure 42. The gap should be .030” (.8 mm) to .060” (1.5 mm).

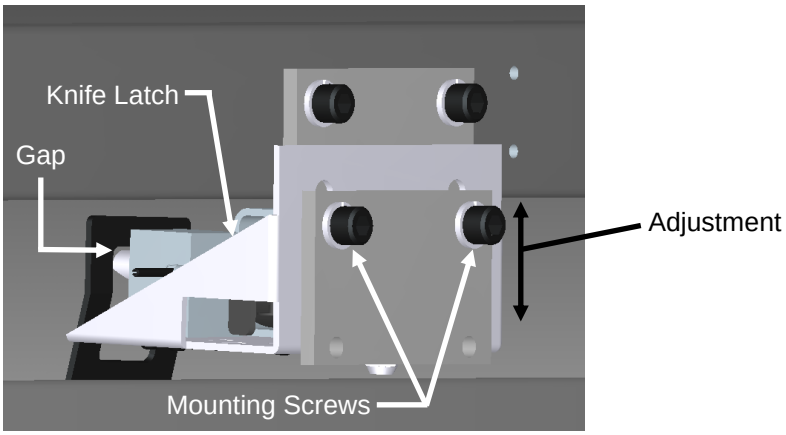

Figure 42 – Knife Latch

5. If the gap is out of range, adjust the knife latch height by loosening the mounting screws (Figure 42) and move the knife latch assembly up or down until the gap is in the correct range of .030” (.8 mm) to .060” (1.5 mm).

6. Tighten the mounting screws.

7. Restore power to the machine and perform a cut cycle. Recheck the gap to make sure it is still within the correct range.

8. Also make sure that the distance between the knife blade edge and the bottom surface of the clamp is greater than the knife latch gap. This ensures that if the knife were to drift down and hang on the knife latch, the knife blade edge will not be exposed.

9. Re-attach upper rear cover.

11.8 Proximity Switches – Knife and Clamp

Proximity switches are used to inform the computer of the up and down positions of the knife and clamp. They do not determine the stopping positions of the knife and clamp, and therefore rarely need to be adjusted. However, if a proximity switch is not sensing the knife or clamp position correctly, it may need adjustment.

11.8.1 Knife Down Proximity Switch

Make sure the clamp and knife are in the up position. Turn the power switch off and lock out power, page 5. Open the top hood.

Adjust the knife down proximity switch (Figure 43) by loosening the two mounting screws and sliding the switch closer to the knife bar. The gap between the proximity switch and the knife bar should be 1/32” – 1/16” (0.5mm – 1.5mm). Turn the power back on and send the knife down using the “Knife Change” feature found in the Maintenance pull-down menu. The light on the proximity switch should be off. If not, adjust the switch up until the light goes out.

Figure 43

11.8.2 Clamp Up Proximity Switch

Make sure the clamp and knife are in the up position. Turn the power switch off and lock out power, page 5. Open the top hood and the upper rear cover.

Adjust the clamp up proximity switch (Figure 44) by loosening the two proximity bracket mounting screws and slide it up or down. The gap between the actuator and the proximity switch should be 1/32” – 1/16” (0.5mm – 1.5mm).

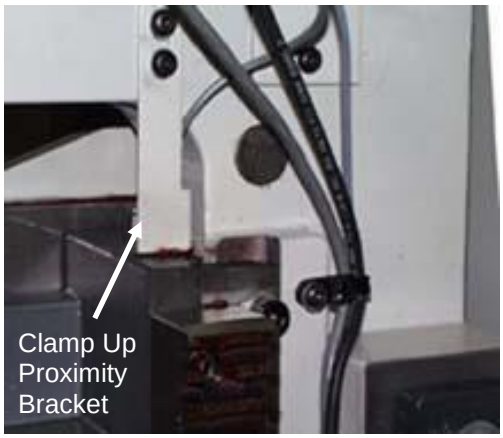

Figure 44

11.8.3 Knife Up Proximity Switch

Send the knife down using the “Knife Change” feature found in the Maintenance pull-down menu. Turn the power switch off and lockout power, page 5. Open the top hood.

Adjust the knife up proximity switch (Figure 45) by loosening the two mounting screws and sliding the switch closer to the knife bar. The gap between the switch and the knife bar should be 1/32” - 1/16” (0.5mm - 1.5mm). Turn the power back on and when the knife is in it’s full up position the proximity should not be on. If it is, lower the switch until it goes off.

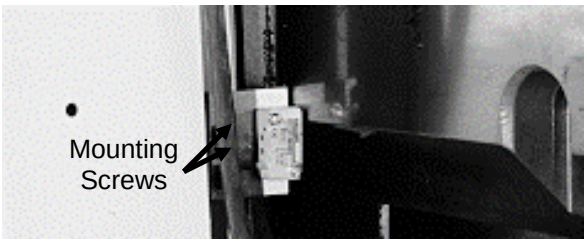

Figure 45

11.8.4 Hydraulic Clamp Up Proximity Switch

Make sure the clamp and knife are in the up position. Turn the power switch off and lockout power, page 5. Remove the lower front panel.

Adjust the hydraulic clamp up proximity switch (Figure 46) by loosening the two mounting bracket screws and sliding the bracket up or down. The gap between the switch and the actuator plate should be 1/32” to 1/16” (0.5 to 1.5 mm). The knife may need to be run down several times to make this adjustment.

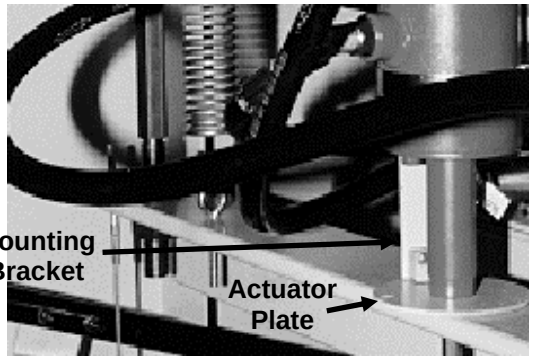

Figure 46

11.9 Proximity Switch – False Clamp Plate

Turn the power switch off and lock out power, page 5. Install the false clamp plate into the clamp. Remove the upper rear cover.

Adjust the proximity switch such that the sensor is aligned with the head of the actuator screw (Figure 47). The gap between the actuator screw head and the proximity switch should be 1/32” – 1/16” (0.5mm – 1.5mm).

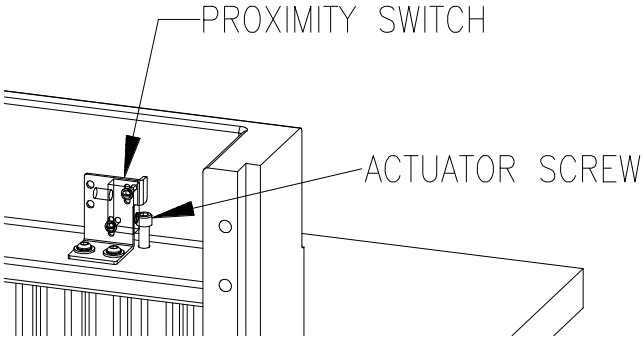

Figure 47

NOTES

12.0 Troubleshooting

CAUTION **Never work on this machine with the power on unless the instructions say the machine power must be on. Lock the power off at the wall disconnect switch. See Power Lockout Procedure, page 5.**

NO POWER/MACHINE FAILS TO TURN ON
Fuse Blown/Circuit Breaker tripped.
Power disconnected.
Main power switch not turned on.

BACKGAUGE DISPLAY INACCURATE
Preset circuit board malfunction.
Encoder malfunction.
Main circuit board malfunction.

BACKGAUGE DISPLAY INACCURATE - BY CONSTANT AMOUNT
Backgauge needs accuracy adjustment.
Presetter malfunction.

CUT BUTTONS PUSHED - WON'T CUT
Electric eyes out of alignment, blocked, or defective.
Hydraulic fluid low.
Main relief valve setting off.
Sequence pressure set wrong.
Cut button defective.
Motor relay defective.
Knife latch solenoid defective.
Knife down coil defective.
Defective directional valve.
Cylinder disconnected from cylinder bracket.
Knife bar dirty or dry, lubricate knife guideways.
Dirt in hydraulic system.

CLAMP STARTS UP BEFORE KNIFE IS UP
Clamp Up Sequence Valve setting incorrect/defective.

CONCAVE CUTTING - ENDS WIDE, CENTER NARROW
Excessive moisture at edges of paper.

CONCAVE CUTTING - VARIATION FROM TOP TO BOTTOM
Soft paper not firmly clamped.
Knife dull or incorrectly grounded.

ERRATIC OPERATION-POWER LOSS
Hydraulic fluid low.
Dirt in hydraulic system.
Oil bypassing piston in cylinder .
Voltage supply is low.
Main relief valve not set properly or defective.

KNIFE DRIFTS DOWN
Knife latch not engaging or damaged.

KNIFE HESITATES OR STALLS
Dull knife.
Main relief valve setting off.
Paper clamped too tight - lower clamp pressure reducer setting.
Cylinder seals worn - leaking pressure.
Hydraulic fluid low.
Voltage supply is low.

KNIFE STARTS DOWN BEFORE CLAMP REACHES TABLE
Knife down sequence valve setting incorrect.
Clamp pressure set too low.

KNIFE WON’T RETURN UP
Solenoid defective.
Limit switch out of adjustment.
Cylinder disconnected from bracket.
Sequence valve misadjusted.

PUMP-MOTOR WON’T SHUT OFF
Knife/Clamp Up Limit switch not activated - readjust.
Motor relay contacts welded.

13.0 Parts List & Sequence of Operations

13.1 Main Assembly – Front View

44600 Sheet 1, Rev. B (See 44600 Sheets 5 & 6 for item descriptions)

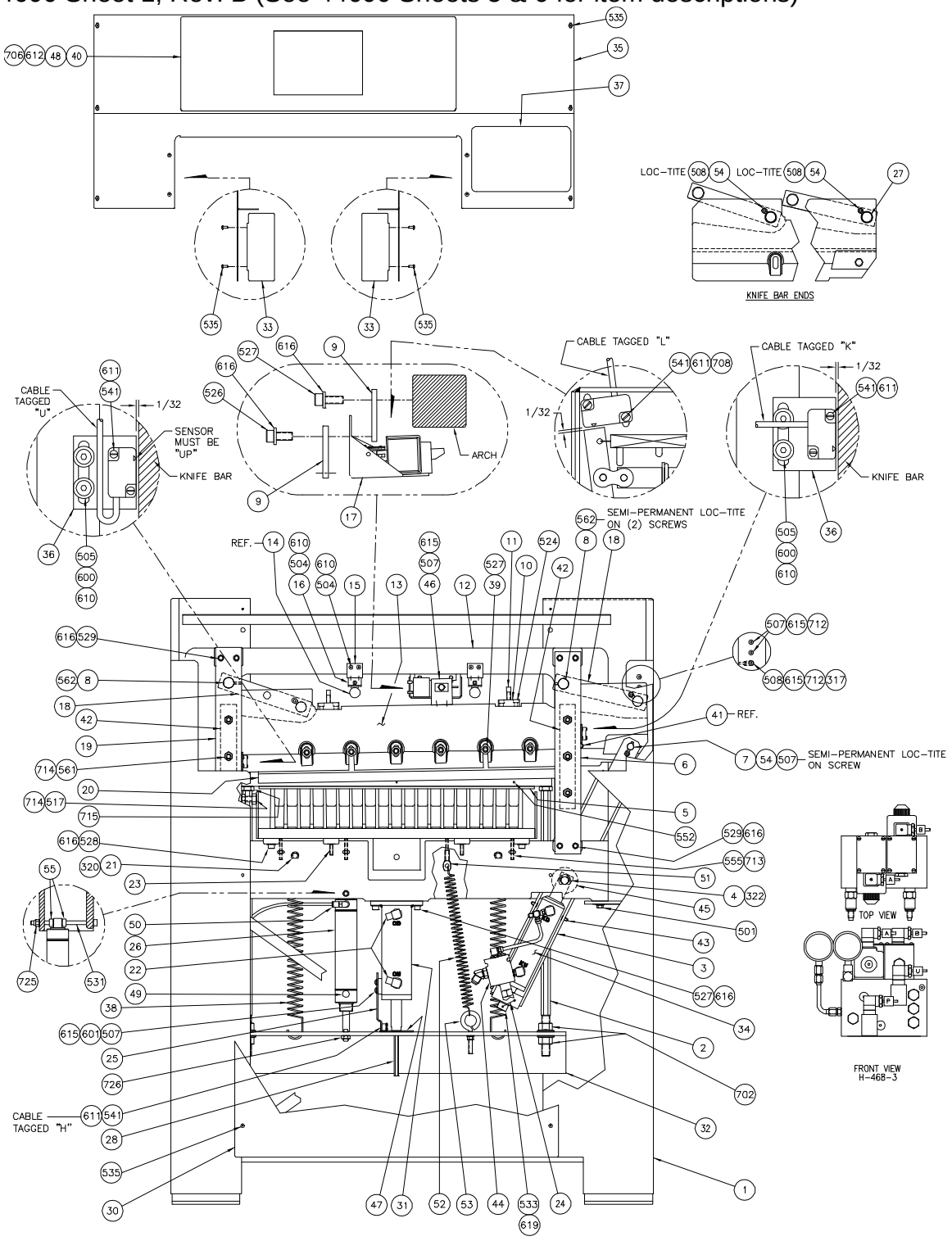

13.2 Main Assembly – Side View

44600 Sheet 2, Rev. A (See 44600 Sheet 5 & 6 for item descriptions)

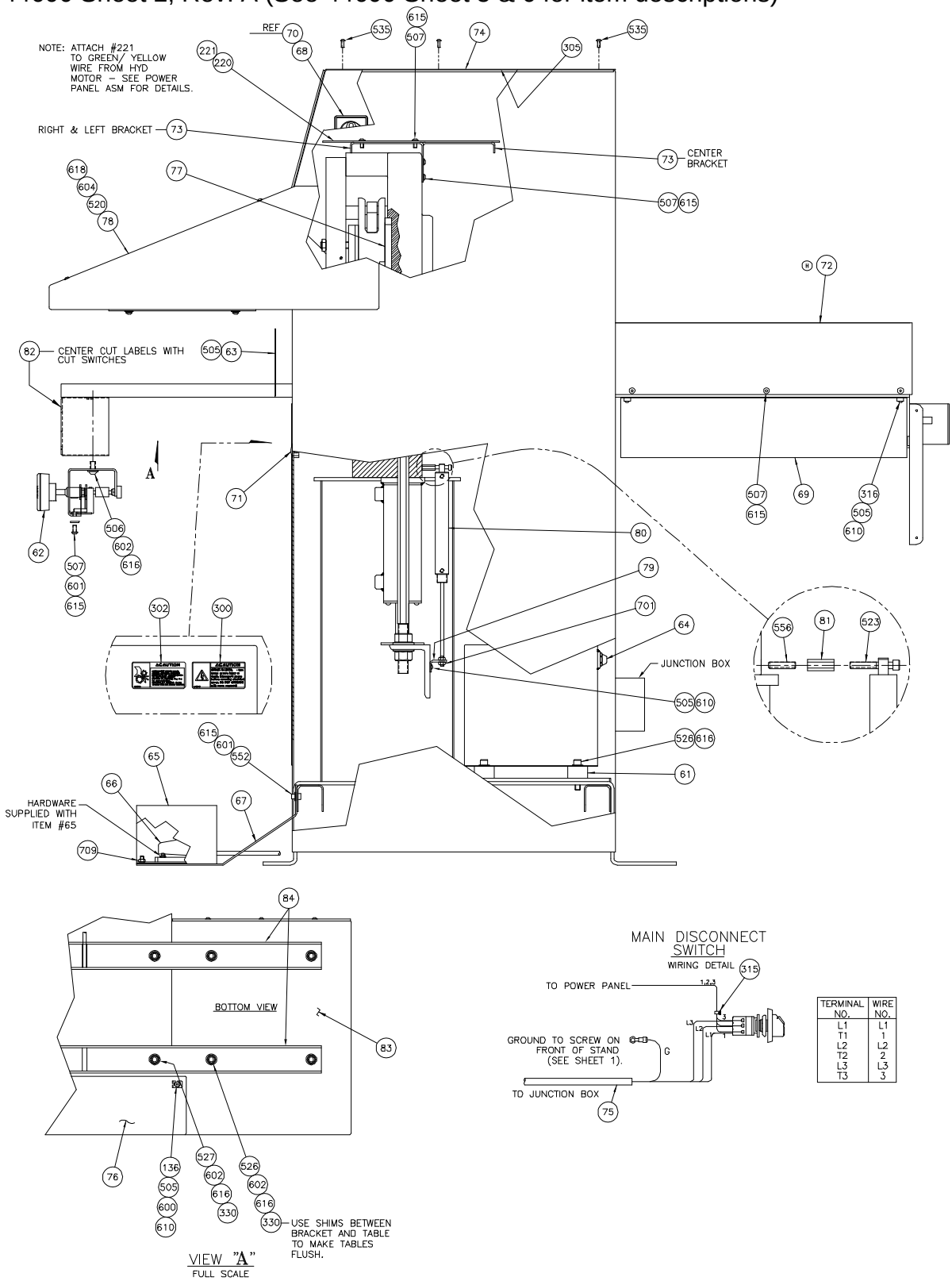

13.3 Main Assembly – Rear View

44600 Sheet 3, Rev. A (See 44600 Sheet 5 & 6 for item descriptions)

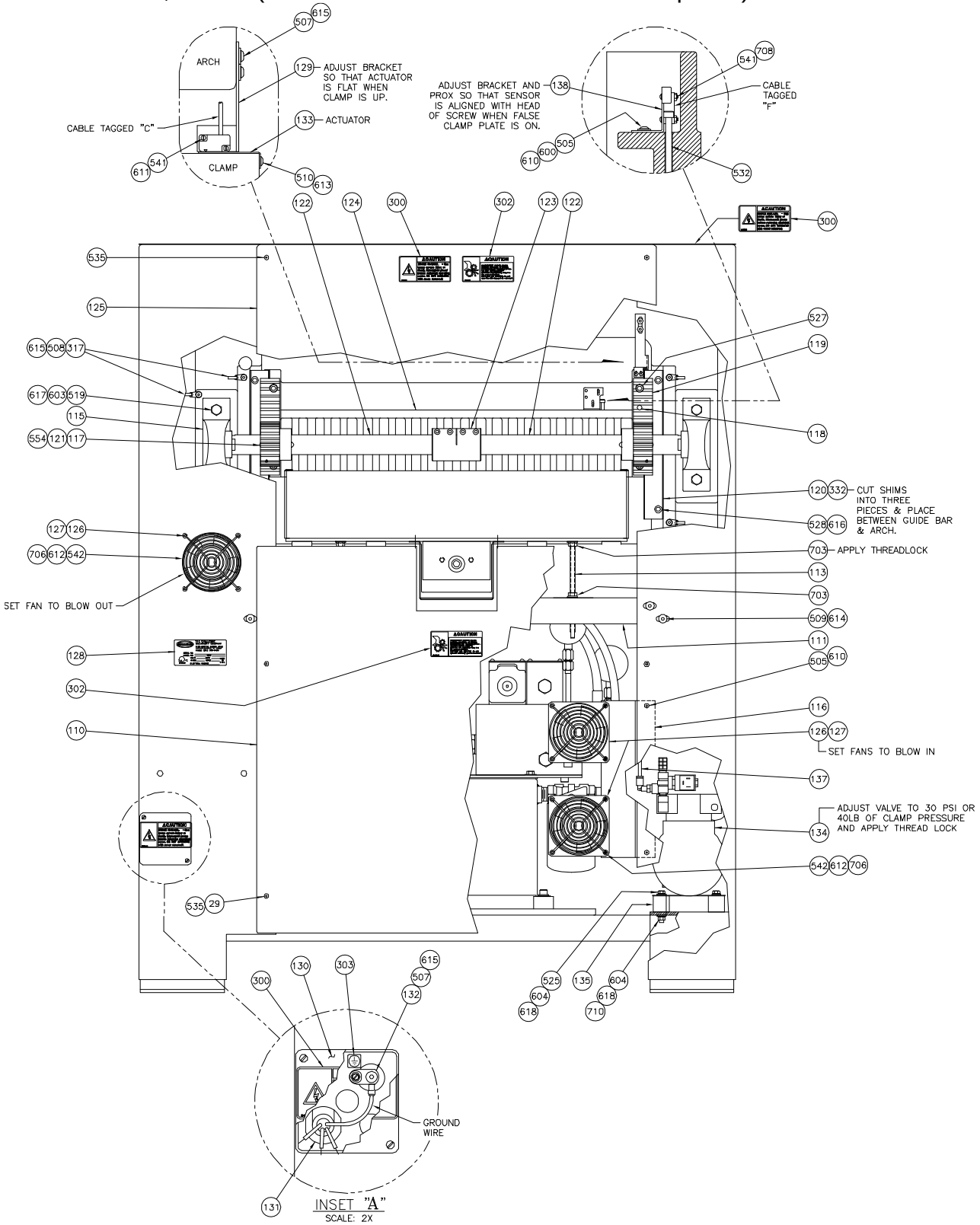

13.4 Main Assembly – Table View

44600 Sheet 4, Rev. A (See 44600 Sheet 5 & 6 for item descriptions)

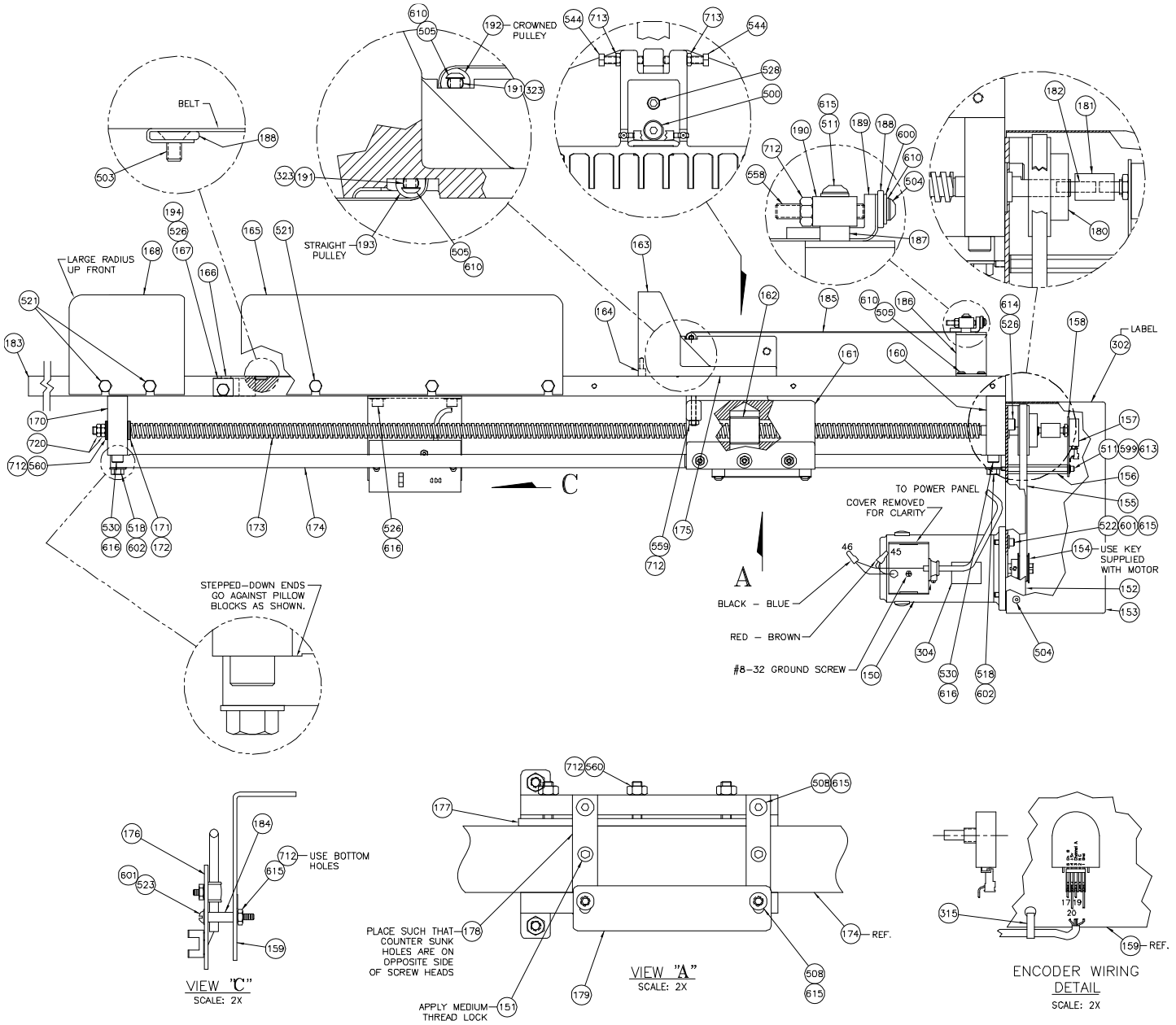

13.5 Main Assembly – Parts List

44600 Sheet 5, Rev. B

NO.	PART NO.	DESCRIPTION OF ACCESSORIES	QTY
1	44030-2	STAND ASSEMBLY	1
2	44013	PULL DOWN ROD	2
3	44058-3	CYL. BRACKET (S/N 265-D-181299 & BELOW)	1
	44058-4	CYL. BRACKET (S/N 265-D-181300 & ABOVE)	
4	44065	PIN - KNIFE CYLINDER	1
5	44027	FALSE CLAMP PLATE	1
6	44016-2	PLATE - RIGHT KNIFE GIB	1
7	44079-1	PIN - KNIFE BAR	1
8	44066-1	PIN - KNIFE LINK	2
9	44114	BRACKET - KNIFE LATCH	2
10	8175	BRACKET - KNIFE ADJ. SCREW	2
11	4449	KNIFE ADJUSTING SCREW	2
12	44002-2	ARCH/BASE	1
13	8963-2	KNIFE BAR ASSEMBLY	1
14	E-967-1	LIGHT BULB	REF.
15	44078	LINE LIGHT BRACKET	2
16	EE-2779	LINE LIGHT ASM.	2
17	47568-1	KNIFE LATCH ASSEMBLY	1
18	44008-1	LINK - KNIFE BAR	2
19	44015-1	PLATE - LEFT KNIFE GIB	1
20	2263-2	KNIFE	1
21	44064	PIN - CLAMP RETURN SPRING	2
22	H-230-6	ELBOW - 90° #6 O-RING TO #8 TUBE	2
23	44055	TAPER PIN	2
24	S-2024	SAFETY WIRE	8"
25	44077	BRACKET - HYD. UP PROX.	1
26	49243	AIR CYLINDER	1
27	8821-1	PIN - KNIFE BAR	2
28	43074	ROD - CLAMP CYLINDER	1
29	E-1152-61	STAND OFF - 3/4"	8
30	44025	COVER - FRONT STAND	1
31	H-505	CYLINDER - CLAMP	1
32	44046-2	FOOT PEDAL PULL DOWN BAR	1
33	44226	SIDE SHIELD	2
34	H-506-4	KNIFE CYL. (S/N 265-D-181299 & BELOW)	1
	H-506-5	KNIFE CYL. (S/N 265-D-181300 & ABOVE)	
35	44220	BEVELED COVER	1
36	44014	BRACKET - KNIFE PROX. SWITCH	2
37	S-1781-116	LABEL - WARNING	1
38	47136-13	SPRING - CLAMP RETURN	2
39	8815	WASHER - KNIFE	6
40	EE-3456-2	CONTROL CONSOLE - TC	1
41	H-21S-375-	PIN - 3/8 X 3/4 ROLL	REF.
42	4505	KNIFE BAR GIB	2
43	E-2196-23	HOLE PLUG	2
44	H-551-2	COUNTERBALANCE VALVE ASM. (S/N'S 265-D-161106 & BELOW)	1
	H-551-3	COUNTERBALANCE VALVE ASM. (S/N'S 265-D-161107 TO 265-D-171151)	
	H-551-4	COUNTERBALANCE VALVE ASM. (S/N'S 265-D-171152 & UP)	
45	44111	DISK	1
46	47504	BRACKET - KNIFE BAR KEEPER	1
47	43076	ACTUATOR - HYD. UP PROX	1
49	P-511	SILENCER/MUFFLER - 1/4 NPT	1
50	P-503-402	ELBOW FITTING - 1/4 TUBE X 1/4 NPT	1
51	44195	EYE NUT	1
52	47136-15	SPRING	1
53	S-1885	EYE BOLT	1
54	44206	ROD END PIN RETAINER	3
55	A-10644-1	COLLAR	2
61	40016-5	VIBRATION MOUNT	4
62	49249	BACKGAUGE CONTROL ASSEMBLY	1
63	44163	BACKPLATE	2
64	H-571-2	HYD. UNIT - 380-415V 3PH 50HZ	1
	H-571-3	HYD. UNIT - 208-230V 3PH 60HZ	
65	E-1719	GUARD - FOOTSWITCH	1
66	EE-3220	FOOTSWITCH ASM	1
67	44189	FOOTSWITCH BRACKET	1
68	E-3083	SWITCH FACE - MAIN DISCONNECT	1
69	44045	COVER - LEADSCREW	1
70	E-3082	SWITCH - MAIN DISCONNECT	REF
71	E-2196	HOLE PLUG	1
72	44225	BACKGAUGE COVER- SHEETMETAL	1
73	44007-1	BRACKET - ELEC. PANEL	3
74	44221	TOP COVER	1
75	EE-2865-2	CABLE ASM. - JUNCTION BOX	1
76	44212	BOX ASSEMBLY - CUT BUTTONS	1
77	44188	UHMW - REAR	2
78	EE-3363	ELEC EYE ASM	1
79	43061-1	BRACKET - CLAMP DAMPER	1
80	44023	DAMPER CYLINDER ASM.	1

NO.	PART NO.	DESCRIPTION OF ACCESSORIES	QTY
81	E-1152-69	STANDOFF - 1"	1
82	S-1781-115	LABEL - CUT BUTTON	2
83	44158	SIDE TABLE	2
84	44166	SUPPORT - SIDE TABLES	2
110	44053-1	COVER - REAR STAND BOTTOM	1
111	44044-1	SUPPORT - REAR STAND	1
113	44084	JACKSCREW	2
115	44096	BEARING	2
116	44196	FAN BRACKET	1
117	S-743	KEY - 3/8 X 3/8 X 2-1/4	2
118	H-5246-612	PIN - 3/8 X 1-1/2 DOWEL	2
119	44083	CLAMP RACK	2
120	44080	CLAMP GUIDE BAR	2
121	44094	GEAR	2
122	44095	SHAFT	2
123	44106	COUPLER	1
124	44005	CLAMP	1
125	44222	COVER - REAR STAND TOP	1
126	47092	GUARD - FINGER	6
127	E-2483-1	FAN - 230 V.	3
128	41130	SPEC. PLATE	1
129	44012	BRACKET - CLAMP UP PROX.	1
130	E-1369-1	COVER - JUNCTION BOX	1
131	S-1350-5	CLAMP - CORD GRIP	1
132	E-640-2	GROUND LUG	1
133	44197	CLAMP UP PROXIMITY ACTUATOR	1
134	44192	COMPRESSOR ASSEMBLY	1
135	40016-8	MOUNT - VIBRATION	4
136	49255-2	STAND-OFF - #10-24X 3-9/16"	2
137	P-303	TUBING - 1/4" AIR	
138	44194	PROX. BRKT - FALSE CLAMP PLATE	1
150	E-1600-166	MOTOR - 180V DC	1
151	S-1944-1	NYLON TIP SET SCREW	2
152	43027-2	BRACKET - MOTOR MOUNT	1
153	43028-1	COVER - BACKGAUGE	1
154	43063	PULLEY	1
155	7954	BELT - TIMING	1
156	E-1152-60	STANDOFF - 3"	2
157	E-2467	ENCODER	1
158	43029	PLATE - ENCODER MOUNT	1
159	10040-1	BRACKET - PRESET	1
160	44068	REAR PILLOW BLOCK ASM.	1
161	44006	BACKGAUGE CARRIER	1
162	43005-1	NUT - LEADSCREW	1
163	44017	BACKGAUGE	1
164	10065	PIN - BACKGAUGE	10
165	44054	SIDEGUIDE - REAR	2
166	4165	CUT STICK	1
167	47630	STOP - CUT STICK	1
168	44121	SIDEGUIDE	2
169	E-1237-6	WIRE NUT	2
170	44067	FRONT PILLOW BLOCK ASM.	1
171	S-1295-3	THRUST WASHER	4
172	S-1300-2	THRUST BEARING	2
173	44003-1	LEADSCREW	1
174	44021	GUIDEBAR - BACKGAUGE BRACKET	1
175	47264	TAPE - UHMW	3
176	EE-1688-1	P.C.B. ASSEMBLY - PRESET	1
177	44069	GIB - BACKGAUGE BRACKET	1
178	43060	STRAP	2
179	43032	PRESET WAND	1
180	43062	PULLEY	1
181	47053	COUPLING	1
182	H-21S-250-1000	PIN - 1/4 X 1" ROLL	1
183	44001-1	TABLE	1
184	E-1152-12	SPACER	2
185	44154	BELT	1
186	44155	BRACKET - BELT	1
187	E-1152-93	SPACER	2
188	44153	BELT CLAMP	2
189	44157	BRACKET - BELT ADJ	1
190	44156	BELT ADJ. BLOCK	1
191	47597	PIN - PULLEY	2
192	47588	CROWNED PULLEY	1
193	47601	STRAIGHT PULLEY	1
194	44210	CUT STICK STOP- LH	1
220	EE-3470	PANEL ASM, POWER - 208/230V	1
221	E-1214-63	CONNECTOR - 1/4 NON- ING RING	1
222	E-2441-11	OVERLOAD - 13A TO 19A (60HZ)	1

13.6 Main Assembly – Parts List

44600 Sheet 6, Rev. B

NO.	PART NO.	DESCRIPTION OF ACCESSORIES	QTY
300	S-1781-11	LABEL - EURO SHOCK W/TEXT	4
301			
302	S-1781-16	LABEL - CAUTION	4
303	S-1781-42	LABEL - EARTH GROUND	1
304	S-1781-50	LABEL - CAUTION	1
305	S-1781-170	LABEL - POWER CONNECTION	1
305	S-1781-235	LABEL – POWER CONNECTION	1
315	S-1694-1	TYRAP	20
316	S-1694-2	TYRAP	4
317	S-1694-3	TYRAP	7
320	S-1193-50	RETAINING RING - 1/2	4
321	S-1193-25	RETAINING RING - 1/4	1
322	S-1193-75	RETAINING RING - 3/4	2
323	S-1073-25	RETAINING RING - 1/4 EXTERNAL	4
330	S-1859-1	SHIM - .005"	12
331			
332	S-1861	SHIM	2
500	H-5254-1008	SCREW - 5/8 X 1" SOC SHOULDER	1
501	H-6894-610	SCREW - 3/8-16 X 1-1/4 WHIZ LOCK	4
502			
503	H-6909-102403	SCREW - #10 X 3/8 FLT HD	2
504	H-6910-102403	SCREW - #10-24 X 3/8 BUT HD SOC	14
505	H-6910-102404	SCREW - #10-24 X 1/2 BUT HD SOC	36
506	H-6910-606	SCREW - 3/8-16 X 3/4 BUT HD	2
507	H-6910-404	SCREW - 1/4-20 X 1/2 BUT HD SOC	28
508	H-6910-406	SCREW - 1/4-20 X 3/4 BUT HD SOC	14
509	H-6910-606	SCREW - 3/8-16 X 3/4 BUT HD	4
510	H-6910-83203	SCREW - #8-32 X 3/8 BUT HD SOC	2
511	H-6918-83203	SCREW - #8-32 X 3/8 SOC HD CAP	2
517	H-6913-812	SCREW - 1/2-13 X 1-1/2 HEX HEAD	1
518	H-6913-608	SCREW - 3/8-16 X 1" HEX HEAD	2
519	H-6913-816	SCREW - 1/2-13 X 2" HEX HEAD	4
520	H-6913-506	SCREW - 5/16-18 X 3/4 HEX HEAD	8
521	H-6913-606	SCREW - 3/8-16 X 3/4 HEX HEAD	10
522	H-6918-406	SCREW - 1/4-20 X 3/4 SOC HD CAP	4
523	H-6918-410	SCREW - 1/4-20 X 1-1/4 SOC HD CAP	3
524	H-6918-508	SCREW - 5/16-18 X 1" SOC HD CAP	4
525	H-6913-504	SCREW - 5/16-18 X 1/2 HEX HEAD	4
526	H-6918-606	SCREW - 3/8-16 X 3/4 SOC HD CAP	18
527	H-6918-608	SCREW - 3/8-16 X 1" SOC HD CAP	20
528	H-6918-610	SCREW - 3/8-16 X 1-1/4 SOC HD CAP	11
529	H-6918-618	SCREW - 3/8-16 X 2-1/4 SOC HD CAP	8
530	H-6918-628	SCREW - 3/8-16 X 3-1/2 SOC HD CAP	4
531	H-6918-648	SCREW - 3/8-16 X 6 SOC HD CAP	1
532	H-6918-440	SCREW - 1/4-20 X 5 SOC HD CAP	1
533	H-6918-1020HH	SCREW - 5/8-11 X 2-1/2 HOLE-IN-HD	1
535	H-6930-102408	SCREW - #10-24 X 1/2 BUT HD NYLC	25
540	H-6920-103203	SCREW - #10-32 X 3/8 BUT HD SOC	4
541	H-6923-44012	SCREW - #4-40 X 3/4 RND HD MACH	10
542	H-6923-63232	SCREW - #6-32 X 2" RD HD MACH	12
543			
544	H-6931-614	SCREW - 3/8-16 X 1-3/4 SQ. HD. SET	2
551	H-6938-102408	SCREW - #10-24 X 1/2 SOC SET	
552	H-6938-408	SCREW - 1/4-20 X 1/2 SOC SET	2
553	H-6951-406	SCREW - 1/4-20 X 3/8 SOC SET NYL.	3

NO.	PART NO.	DESCRIPTION OF ACCESSORIES	QTY
554	H-6938-606	SCREW - 3/8-16 X 3/8 SOC SET	4
555	H-6938-632	SCREW - 3/8-16 X 2" SOC SET	4
556	H-6938-416	SCREW - 1/4-20 X 1" SOC. SET	1
557			
558	H-6938-424	SCREW - 1/4-20 X 1-1/2 SOC. SET	2
560	H-6953-416	SCREW - 1/4-20 X 1" OVL PT. SET	3
561	H-6938-844	SCREW - 1/2-13 X 2-3/4 SOC SET	6
562	H-6947-608	SCREW- 3/8-16 FULL DOG SET	2
599	H-7321-#8	WASHER - #8 PLAIN	2
600	H-7321-#10	WASHER - #10 PLAIN	12
601	H-7321-4	WASHER - 1/4 PLAIN	22
602	H-7321-6	WASHER - 3/8 PLAIN	12
603	H-7321-8	WASHER - 1/2 PLAIN	4
604	H-7321-5	WASHER - 5/16 PLAIN	16
610	H-7324-#10	WASHER - #10 INT. TOOTH	44
611	H-7324-#4	WASHER - #4 INT. TOOTH	8
612	H-7324-#6	WASHER - #6 INT. TOOTH	16
613	H-7324-#8	WASHER - #8 INT. TOOTH	4
614	H-7324-12	WASHER - 3/8 INT. TOOTH	6
615	H-7324-8	WASHER - 1/4 INT. TOOTH	48
616	H-7327-12	WASHER - 3/8 MED. LOCK	48
617	H-7327-16	WASHER - 1/2 MED. LOCK	4
618	H-7327-10	WASHER - 5/16 MED. LOCK	16
619	H-7327-20	WASHER - 5/8 MED. LOCK	1
701	H-5248-4	NUT - 1/4-28 FLEX LOCK	1
702	H-6414-10	NUT - 3/4-10 HEX WHIZ LOCK	4
703	H-6414-6	NUT - 3/8-16 HEX WHIZ LOCK	4
705			
706	H-6423-#6	NUT - #6-32 HEX	16
707			
708	H-6423-#4	NUT- #4-40 HEX KEP	4
709	H-6423-4	NUT - 1/4-20 HEX KEP	3
710	H-6423-5	NUT - 5/16-18 HEX	4
712	H-6424-4	NUT - 1/4-20 HEX JAM	11
713	H-6424-6	NUT - 3/8-16 HEX JAM	6
714	H-6424-8	NUT - 1/2-13 HEX JAM	7
715	H-6424-12	NUT - 3/4-10 HEX JAM	2
720	H-6428-6	NUT - 3/8-24 HEX JAM	2
725	H-5247-6	NUT - 3/8-16 FLEX LOCK	1
726	H-5240-9	NUT - 1/2-20 FLEX LOCK - THIN	1

13.7 Main Assembly – 3 Phase 50 Hz Option

44600 Sheet 7, Rev. B

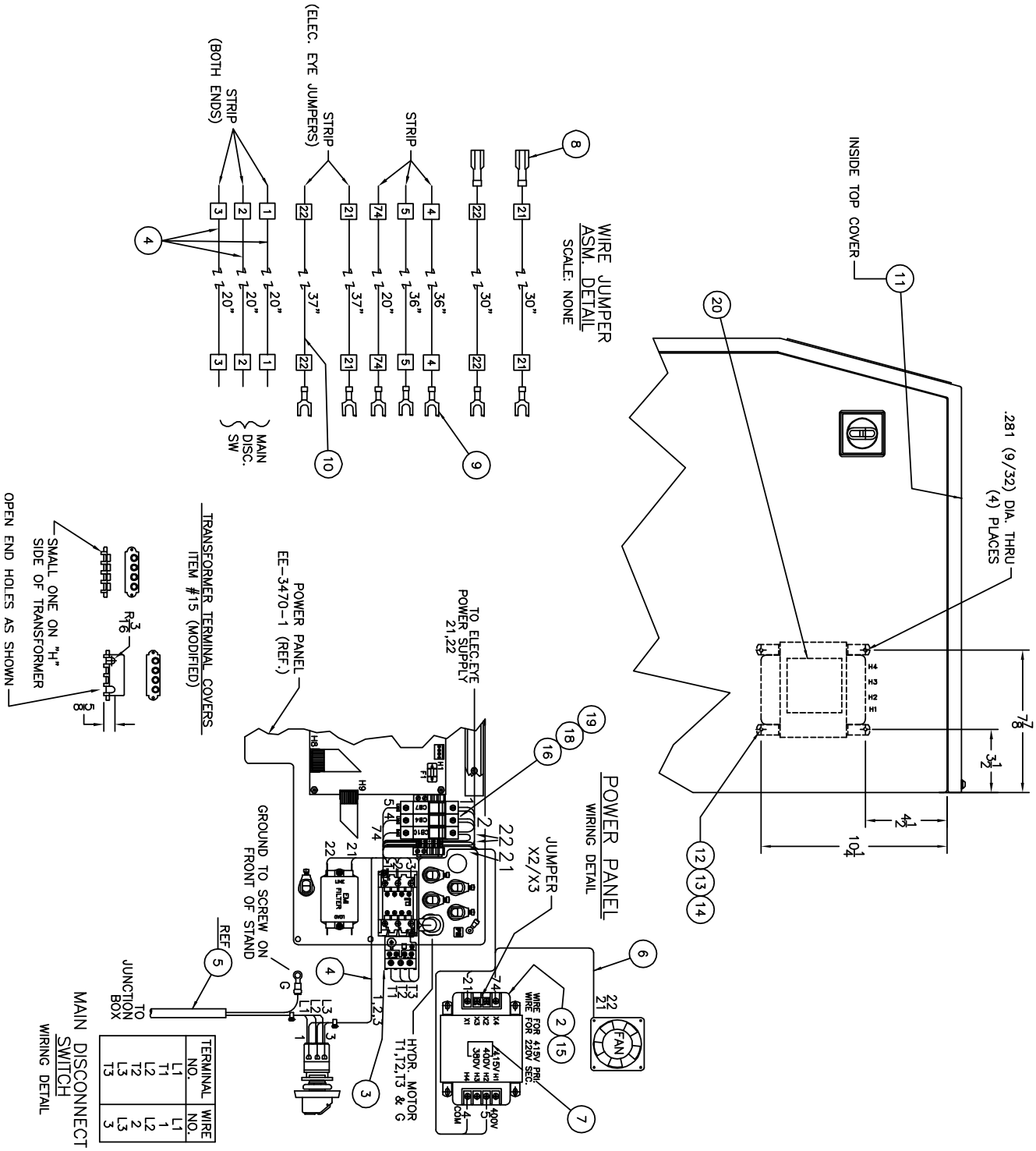

Main Assembly – 3 Phase 50Hz Option (cont)

INSTRUCTIONS:

1) REPLACE THE EXISTING CABLE FROM THE JUNCTION BOX TO THE MAIN DISCONNECT SWITCH WITH ITEM #5.
2) REPLACE THE EXISTING CABLE FROM THE POWER PANEL TO THE MAIN DISCONNECT SWITCH WITH ITEMS #4.

NOTE: IF YOUR MACHINE ALREADY HAS INDIVIDUAL WIRES RUNNING FROM THE POWER PANEL TO THE MAIN DISC. SWITCH, REPLACE THEM WITH THE SUPPLIED WIRES (ITEM #4) BECAUSE THE WIRE NUMBERS AND PANEL LOCATIONS CHANGE – SEE WIRE DETAIL.

3) REPLACE THE OVERLOAD CONTACT WITH ITEM #3. SET TO 8.5A
4) REMOVE THE FAN CABLE FROM THE POWER PANEL.
5) USING THE WIRE JUMPER DETAIL, CUT WIRES TO THE LENGTHS SHOWN. STRIP WIRE INSULATION BACK 1/4" ON ALL WIRES. IF REQUIRED, INSTALL WIRE CONNECTORS AS SHOWN IN THE CHART. WIRE TAG ALL WIRES AS SHOWN IN THE CHART.
6) DRILL (4) HOLES AT DIMENSIONS SHOWN.
7) INSTALL THE TRANSFORMER TO THE INSIDE OF THE MACHINE AS SHOWN.
8) REPLACE THE EXISTING TERM RAIL WITH THE NEW SUPPLIED ONE.
9) REWIRE THE POWER PANEL AS SHOWN IN WIRING DETAILS.

NO.	PART NO.	DESCRIPTION OF ACCESSORIES	QTY
1			
2	E–1089–28	TRANSFORMER – 750VA 50Hz	1
3	E–2441–20	CONTACTOR – OVERLOAD, 7.6A TO 10A	1
4	E–798–B	WIRE – #12GA. BLACK MTW 20" LONG	3
5	EE–2865–2	CABLE ASM. – POWER CORD JUMPER, 3PH	REF
6	EE–2466–3	CABLE ASM. – FAN, 230V	1
7	E–1584–53	LABEL – TRANSFORMER, "T3"	1
8	E–1214–49	CONNECTOR – 1/4" FULLY INS. Q.D.	2
9	E–1214–1	CONNECTOR – #10 INS. LOCKING FORK	7
10	E–702–R	WIRE – #14 GA. RED MTW 226" TOTAL	1
11	S–1781–170	LABEL – POWER CONNECTION PROCEDURE	REF
12	H–6910–404	SCREW – 1/4–20 X 1/2 BUT HD CAP	4
13	H–7321–4	WASHER – 1/4 FLAT	4
14	H–6423–4	NUT – 1/4–20 HEX W/LOCKWASHER (KEP)	4
15	E–2974	COVER – TRANSFORMER TERMINALS (MODIFIED)	1
16	E–3264–6	CIRCUIT BREAKER – 5A (CB10)	1
17			
18	E–2068–8	TERMINAL BLOCK – THROUGH, #10 GA.	2
19	E–1977–10	TERMINAL RAIL – 3–1/2"	1
20	S–1781–167	LABEL – TRANSFORMER TAP SETTINGS	1

13.8 Main Assembly – 3 Phase 60Hz Option

44600 Sheet 8, Rev. A

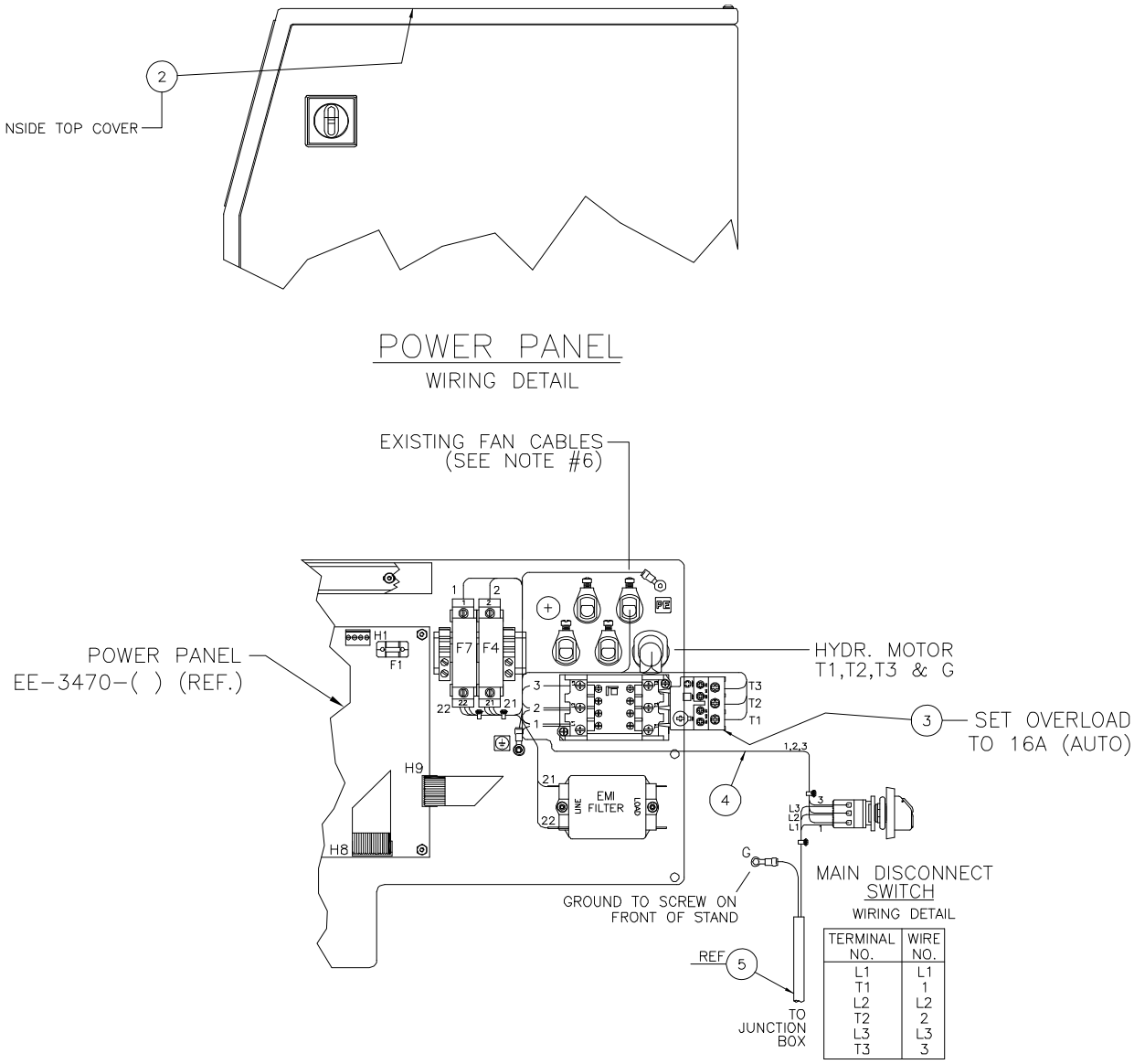

NO.	PART NO.	DESCRIPTION OF ACCESSORIES	QTY
1			
2	S-1781-170	LABEL - POWER CONNECTION PROCEDURE	REF
3	E-2441-11	CONTACTOR - OVERLOAD, 13A TO 19A	REF
4	E-798-B	WIRE - #12GA BLACK MTW 20" LONG	3
5	EE-2865-3	CABLE ASM. - JUNCTION BOX POWER, 3PH	1
6	S-1694	TYRAP	2
7	EE-3068-1	CABLE ASM. - FILTER/MANIFOLD FANS	1

13.9 Main Assembly – Air Table Option

44600 Sheet 9, Rev. A

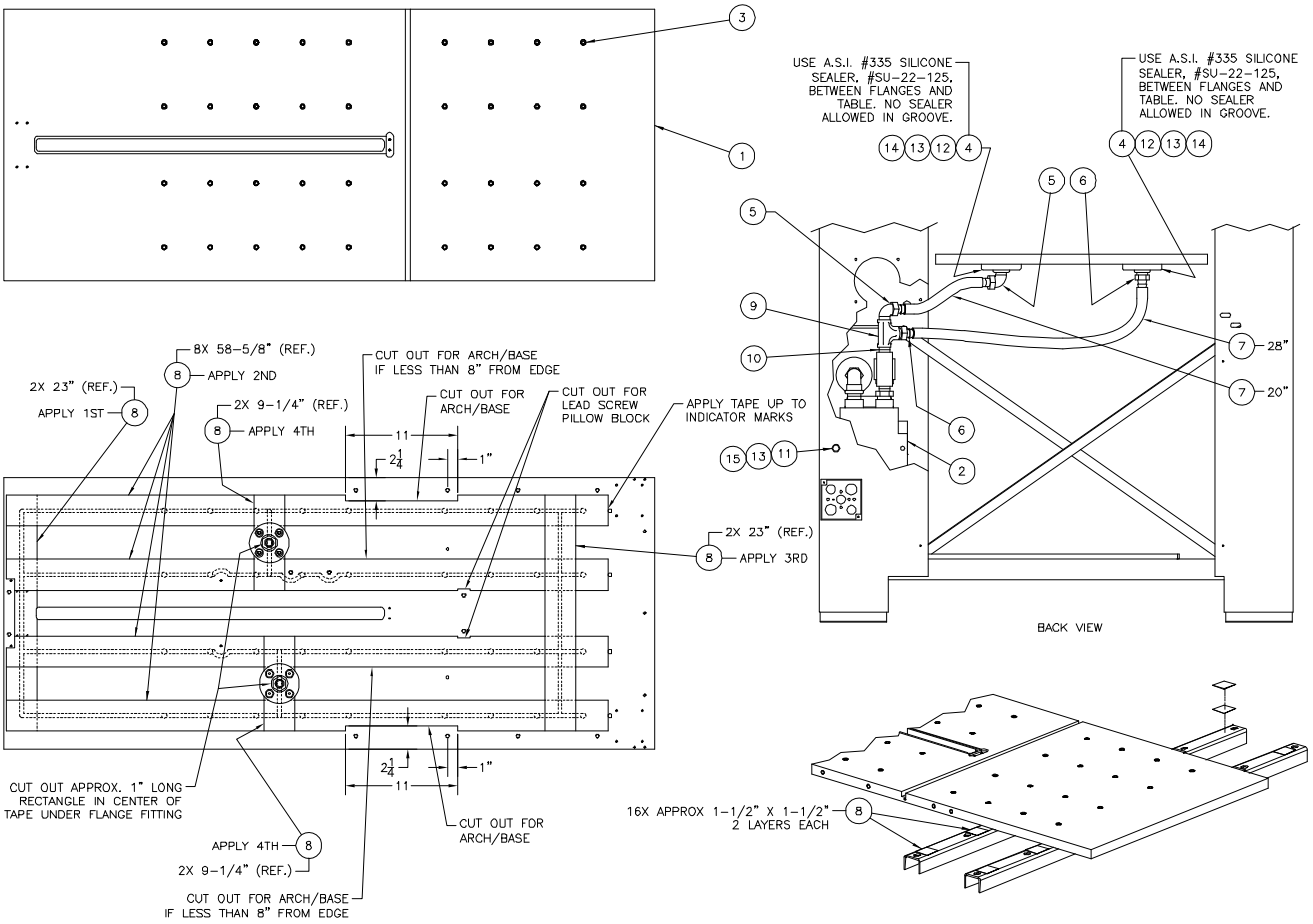

NO.	PART NO.	DESCRIPTION OF ACCESSORIES	QTY
1	44165	TABLE - AIR	1
2	44186	BLOWER ASSEMBLY	1
3	P-207-2	AIR JET	36
4	P-211	THREADED FLANGE FITTING - PVC	2
5	P-205-10	INSERT - 90%%176 ELBOW - 3/4 NPT X 3/4 TUBE	2
6	P-210-11	INSERT - 3/4 NPT X 3/4 TUBE	2
7	P-275	3/4" HOSE - REINFORCED PVC	48"
8	S-2015-1	TAPE - ALUMINUM	620"
9	P-463	TEE - 3/4 NPT (PVC)	1
10	H-6405-1212	NIPPLE - 3/4 NPT (STEEL)	1
11	H-6894-610	SCREW - 3/8-16 X 1-1/4 WHIZ LOCK	2
12	H-6910-608	SCREW - 3/8-16 X 1" BUT HD	8
13	H-7327-12	WASHER - 3/8 MEDIUM LOCK	10
14	H-7321-6	WASHER - 3/8 PLAIN	8
15	H-6417-6	NUT - 3/8-16 HEX	2

13.10 Main Assembly – Air Table Option Blower (w/Fuses)

44600 Sheet 10, Rev. A

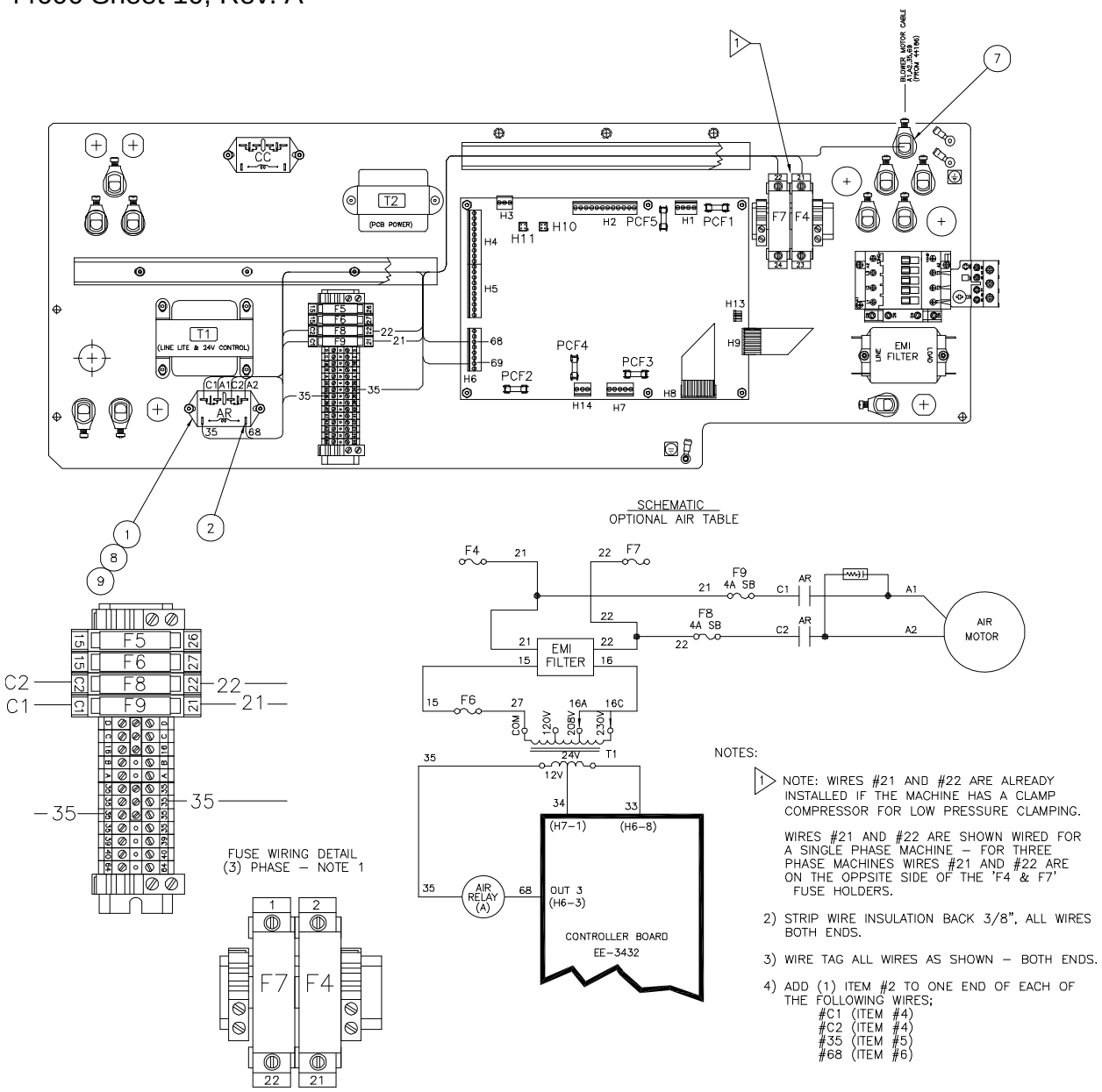

NOTES:

1) NOTE: WIRES #21 AND #22 ARE ALREADY INSTALLED IF THE MACHINE HAS A CLAMP COMPRESSOR FOR LOW PRESSURE CLAMPING.

WIRES #21 AND #22 ARE SHOWN WIRED FOR A SINGLE PHASE MACHINE – FOR THREE PHASE MACHINES WIRES #21 AND #22 ARE ON THE OPPSITE SIDE OF THE 'F4 & F7' FUSE HOLDERS.

2) STRIP WIRE INSULATION BACK 3/8", ALL WIRES BOTH ENDS.

3) WIRE TAG ALL WIRES AS SHOWN – BOTH ENDS.

4) ADD (1) ITEM #2 TO ONE END OF EACH OF THE FOLLOWING WIRES;
#C1 (ITEM #4)
#C2 (ITEM #4)
#35 (ITEM #5)
#68 (ITEM #6)

NO.	PART NO.	DESCRIPTION OF ACCESSORIES	QTY
1	E-2232-2	RELAY - AIR - 24V COIL	1
2	E-1214-65	CONNECTOR - 1/4" FULLY INS. FEMALE Q.D.	4
3	E-709-R	WIRE - #18 GA. RED, 23" LONG (#21 & 22)	2
4	E-709-R	WIRE - #18 GA. RED, 9" LONG (#C1 & C2)	2
5	E-709-R	WIRE - #18 GA. RED, 9" LONG (#35)	1
6	E-709-R	WIRE - #18 GA. RED, 18" LONG (#68)	1
7	S-1350-16	STRAIN RELIEF - CABLE	1
8	H-6910-83203	SCREW - #8-32 X 3/8 BUT HD SOC CAP	2
9	H-7324-#8	WASHER - #8 INT. TOOTHLOCK	2

Main Assembly – Air Table Option Blower (w/circuit breakers)

44600 Sheet 10 – Rev. B

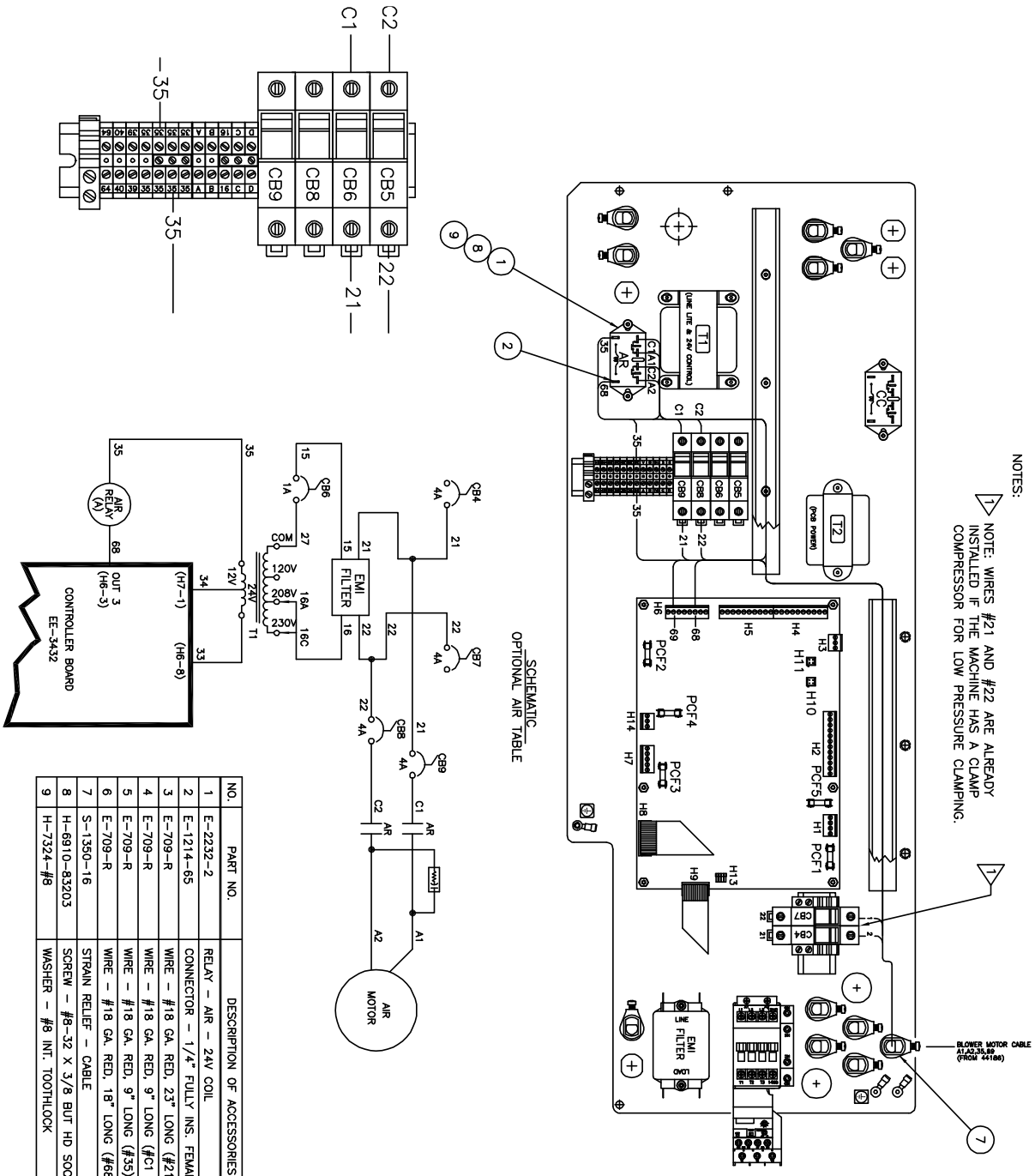

NO.	PART NO.	DESCRIPTION OF ACCESSORIES	QTY
1	E-2232-2	RELAY – AIR – 24V COIL	1
2	E-1214-65	CONNECTOR – 1/4" FULLY INS. FEMALE Q.D.	4
3	E-709-R	WIRE – #18 GA. RED, 23" LONG (#21 & 22)	2
4	E-709-R	WIRE – #18 GA. RED, 9" LONG (#C1 & C2)	2
5	E-709-R	WIRE – #18 GA. RED, 9" LONG (#35)	1
6	E-709-R	WIRE – #18 GA. RED, 18" LONG (#68)	1
7	S-1350-16	STRAIN RELIEF – CABLE	1
8	H-6910-83203	SCREW – #8-32 X 3/8 BUT HD SOC CAP	2
9	H-7324-#8	WASHER – #8 INT. TOOTHLOCK	2

13.11 Main Assembly – 460 Volt 3 Phase 60 Hz Option

44600 Sheet 11, Rev. A

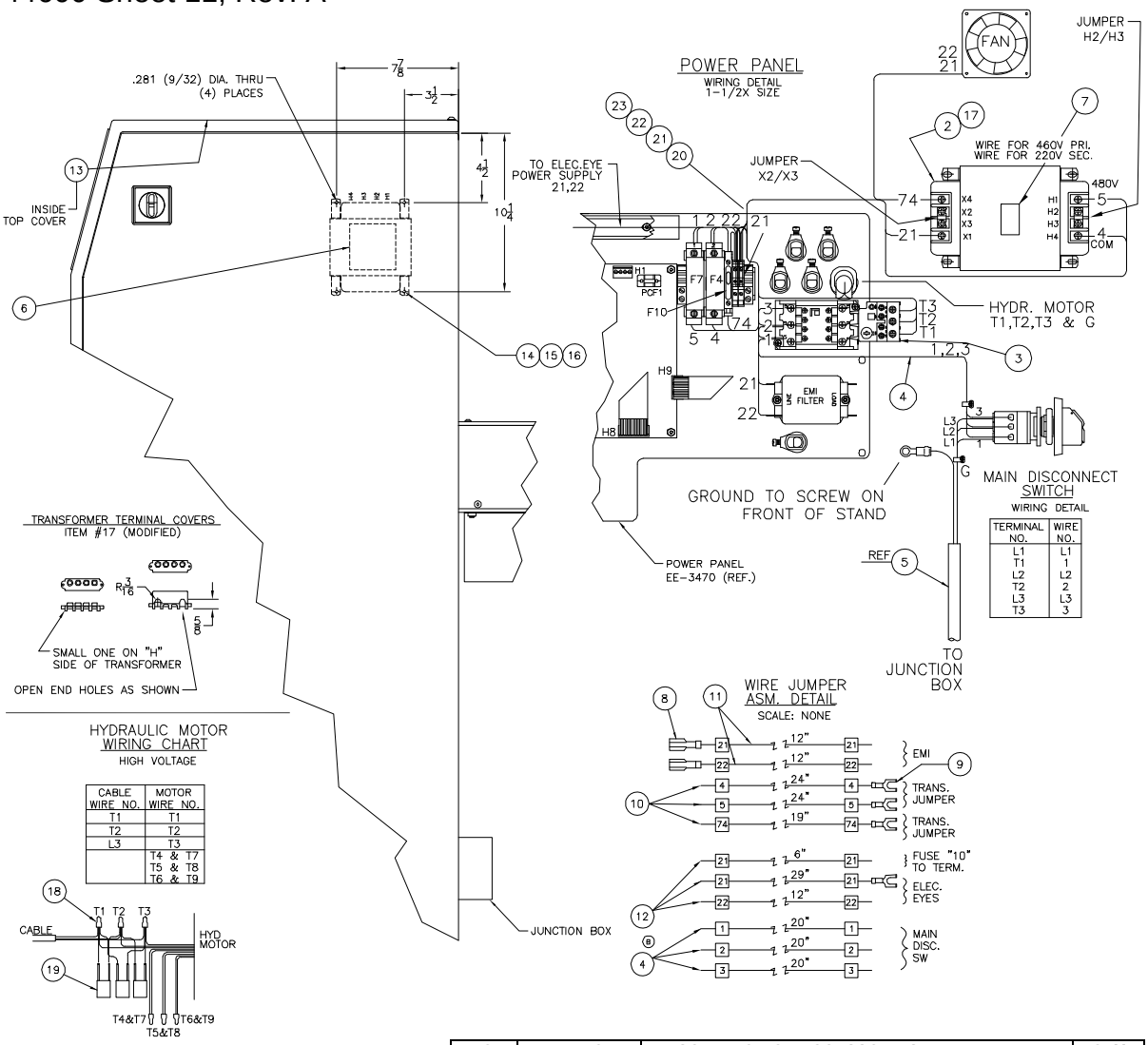

NO.	PART NO.	DESCRIPTION OF ACCESSORIES	QTY
1			
2	E-1089-46	TRANSFORMER - 750VA	1
3	E-2441-13	CONTACTOR - OVERLOAD, 7.5A TO 11A	1
4	E-798-B	WIRE - #12GA. BLACK MTW 20" LONG (1,2,3)	3
5	EE-2865-2	CABLE ASM. - POWER CORD JUMPER, 3PH	REF
6	S-1781-167	LABEL - TRANSFORMER TAP SETTINGS	1
7	E-1584-53	LABEL - TRANSFORMER, "T3"	1
8	E-1214-49	CONNECTOR - 1/4" FULLY INS. Q.D.	2
9	E-1214-1	CONNECTOR - #10 INS. LOCKING FORK	4
10	E-702-R	WIRE - #14 GA. RED MTW 67" TOTAL	1
11	E-849-R	WIRE - #16 GA. RED MTW 29" TOTAL	1
12	E-709-R	WIRE - #18 GA. RED MTW 41" TOTAL	1
13	S-1781-170	LABEL - POWER CONNECTION PROCEDURE	REF
14	H-6910-404	SCREW - 1/4-20 X 1/2 BUT HD CAP	4
15	H-7321-4	WASHER - 1/4 FLAT	4
16	H-6423-4	NUT - 1/4-20 HEX W/LOCKWASHER (KEP)	4
17	E-2974	COVER - TRANSFORMER TERMINALS (MODIFIED)	1
18	E-1237-2	WIRE NUT	6
19	E-1736-2	QUENCHARC	3
20	E-1974-9	FUSE HOLDER - GLASS (1/4 X 1-1/4)(F10)	1
21	E-889-6	FUSE - 5A SLO-BLO GLASS (F10)	1
22	E-2068-9	TERMINAL BLOCK - UK5 RETURN, #10 GA.	2
23	E-1977-10	TERMINAL RAIL - 3-1/2"	1

13.12 Main Assembly – Stainless Steel Table Option

44600 Sheet 12, Rev. A

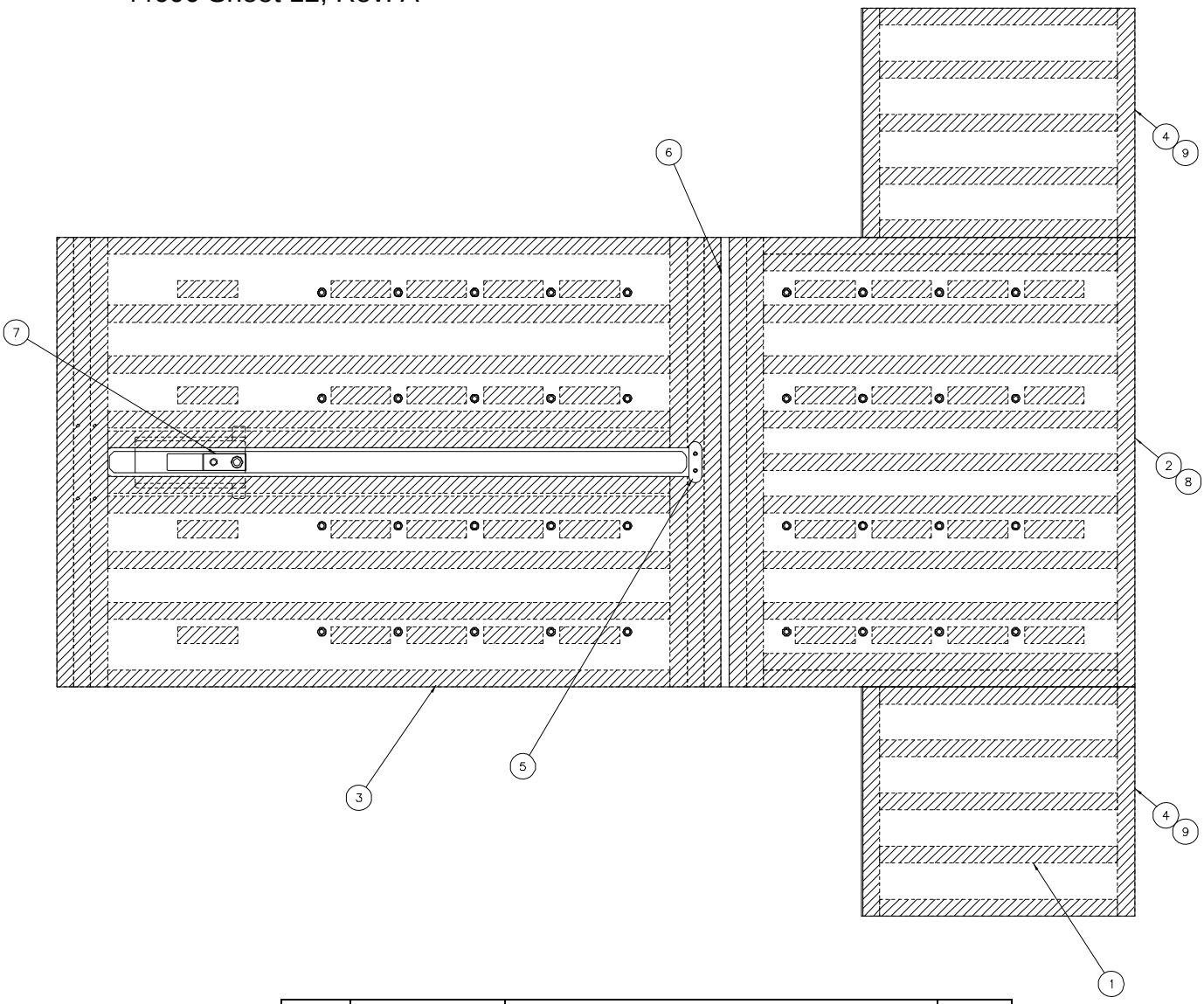

NO.	PART NO.	DESCRIPTION OF ACCESSORIES	QTY
1	35222-1	TAPE- ADHESIVE TRANSFER, 1 X .005	89'
2	44198	FRONT TABLE	1
	44205	FRONT TABLE- AIR	
3	44199	REAR TABLE	1
	44204	REAR TABLE- AIR	
4	44200	SIDE TABLE	2
5	44202	BELT CLAMP SHIM	1
6	44201	CUT STICK SHIM	1
7	44203	BACKGAUGE SHIM	1
8	44165-1	AIR TABLE- TITAN 265, NO PAINT	1
	44001-2	TABLE- TITAN 265, NO PAINT	
9	44158-1	SIDE TABLE- TITAN 265, NO PAINT	2

13.13 Electrical Panel Assembly – (w/Fuses)

EE-3470, Rev. P

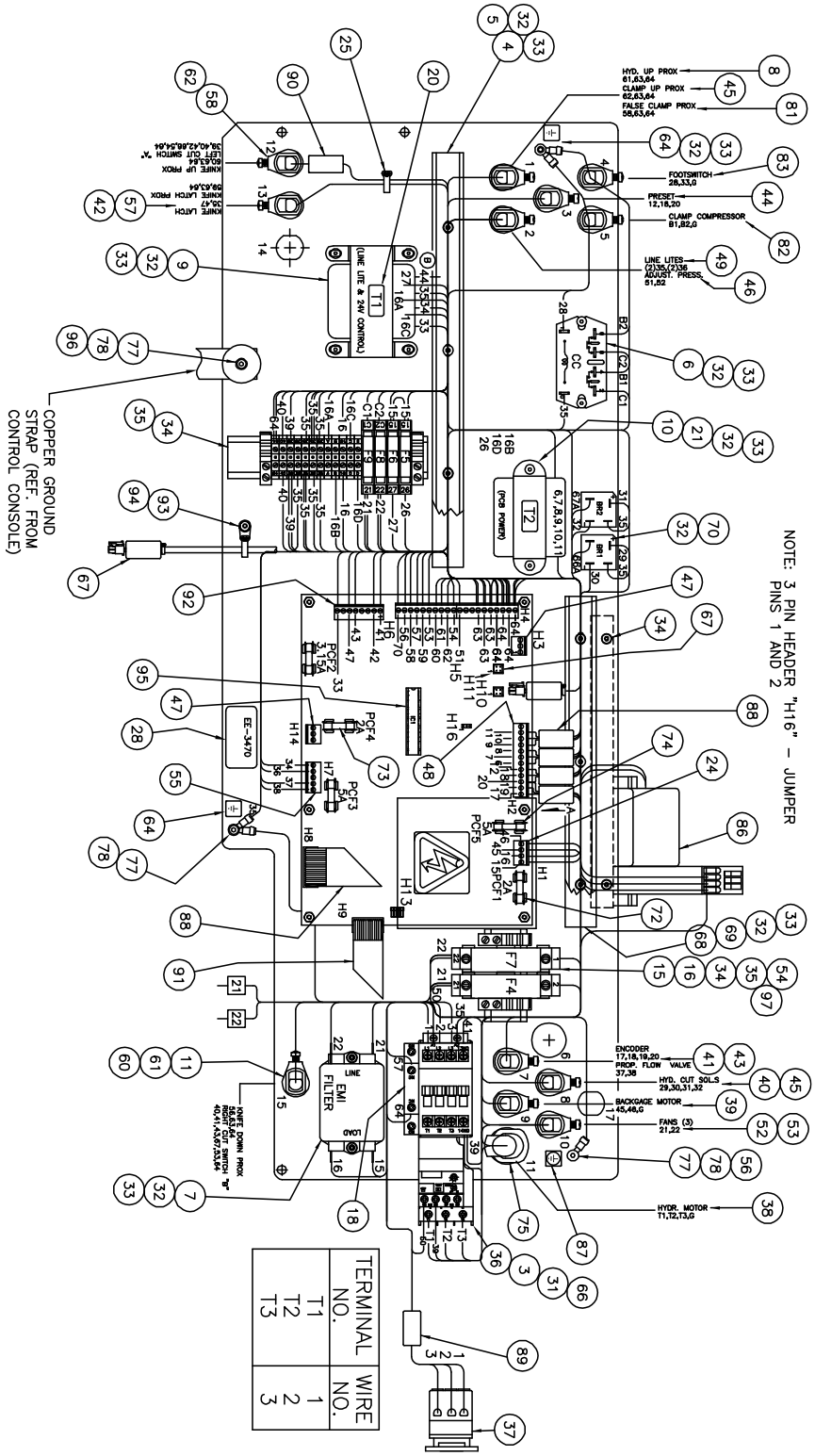

Electrical Panel Assembly (cont.)

TRANSFORMER COLOR CODE	
T1	
WIRE COLOR	WIRE NO.
BLACK	27
BLACK/YELLOW	16A
BLACK/RED	16C
WHITE	35
YELLOW	34
RED	33
GREEN	44
T2	
WIRE COLOR	WIRE NO.
BLACK	26
BLACK/YELLOW	16B
BLACK/RED	16D
BLUE	9
BLUE/YELLOW	10
BLUE	11
RED	8
RED/YELLOW	7
RED	6

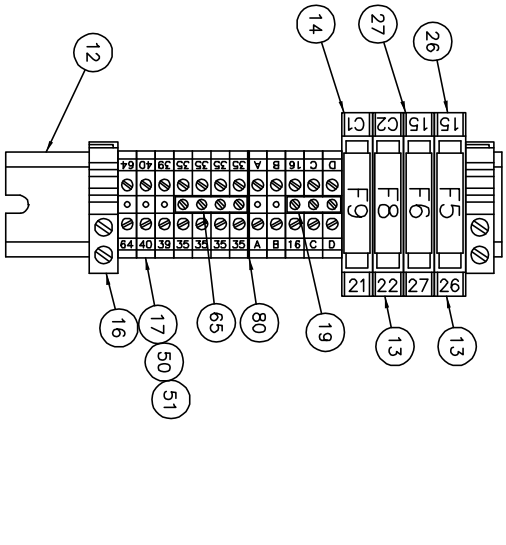

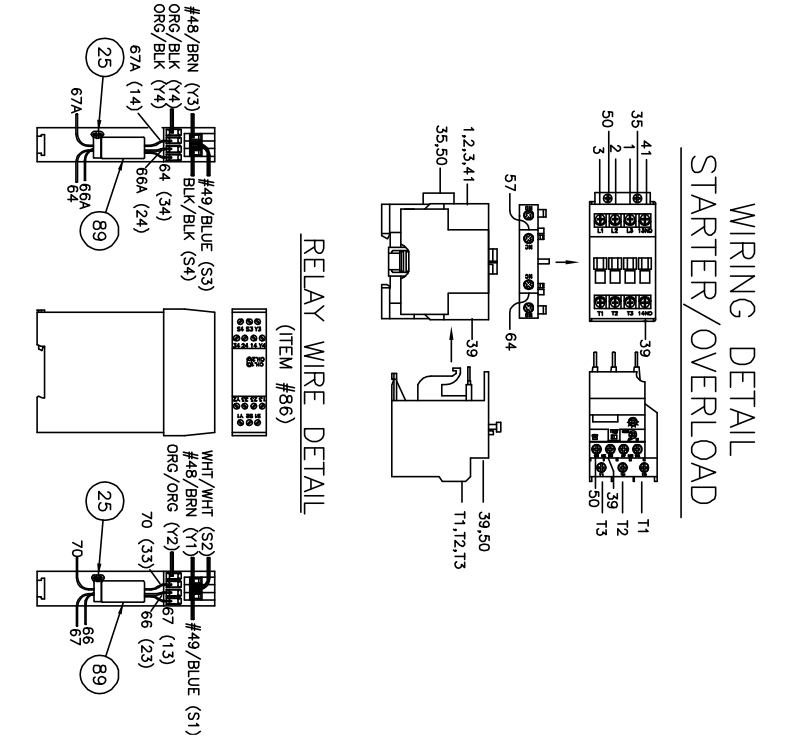

EE-3470 – Parts List

NO.	PART NO.	DESCRIPTION OF ACCESSORIES	QTY
1	43006-2	PANEL - ELECTRICAL	1
2	EE-3432-2	P.C.B. ASSEMBLY - CONTROLLER	1
3	E-2805-6	STARTER - CONTACTOR	1
4	E-1429-14	WIRE DUCT - 13-1/2" LONG	1
5	E-2719-14	COVER - WIRE DUCT, 13-1/2" LONG	1
6	E-2232-2	RELAY - CLAMP COMPRESSOR (CC)	1
7	E-2730-3	FILTER - EMI, PANEL MOUNT	1
8	EE-2770-1	PROXIMITY ASSEMBLY - HYDRUALIC UP	1
9	E-2742-6	TRANSFORMER - 120/208/230V PRIM., "T1"	1
10	E-2742-5	TRANSFORMER - 120/230V PRIM., "T2"	1
11	S-1350-16	STRAIN RELIEF - CABLE	12
12	E-1977-18	RAIL - TERMINAL BLOCK, 6-1/2 LONG	1
13	E-1974-9	FUSE BLOCK - TERMINAL MOUNT, GLASS FUSE	4
14	E-889-5	FUSE - GLASS, 4A T "F8" & "F9"	2
15	E-1974-10	FUSE HOLDER - RAIL MOUNT, MIDGET	2
16	E-2070-1	END BRACKET - TERMINAL BLOCK	4
17	E-2068-8	TERMINAL BLOCK - THROUGH, #10 GA.	12
18	E-2376-8	CONTACTOR - AUXILIARY (SIDE MOUNT)	1
19	E-2507-3	FIXED BRIDGE - TERMINAL BLOCK - 3 POLE	2
20	E-1584-51	LABEL - TRANSFORMER, "T1"	1
21	E-1584-52	LABEL - TRANSFORMER, "T2"	1
22	E-1152-56	STAND-OFF - 1/2" LONG, #6-32 THR'D	6
23	E-2066-10	CONNECTOR - PLUG IN PCB TERMINAL BLOCK	2
24	E-2066-4	CONNECTOR - PLUG IN PCB TERMINAL BLOCK	1
25	S-1694	CABLE TIE	7
26	E-889-12	FUSE - GLASS, 1/2A T "F5"	1
27	E-889	FUSE - GLASS, 1-1/4A T "F6"	1
28	E-1584-( )	LABEL - PART NUMBER/ REVISION LEVEL	1
29	H-6910-63203	SCREW - #6-32 X 3/8" BUT HD	6
30	H-6423-#6	NUT - #6-32 HEX	6
31	H-7324-#6	WASHER - #6 INT. TOOTHLOCK	14
32	H-6910-83204	SCREW - #8-32 X 1/2" BUT	18
33	H-7324-#8	WASHER - #8 INT. TOOTHLOCK	16
34	H-6910-102403	SCREW - #10-24 X 3/8" BUT HD	6
35	H-7324-#10	WASHER - #10 INT. TOOTHLOCK	4
36	E-2441-18	OVERLOAD - CONTACTOR, 13A TO 19A	1
37	E-3082	SWITCH BODY - MAIN DISCONNECT	1
38	EE-2858-1	CABLE ASSEMBLY - HYDRAULIC MOTOR	REF
39	EE-2768	CABLE ASSEMBLY - BACKGAGE MOTOR	1
40	EE-2769-10	CABLE ASSEMBLY - CUT SOLENOID "A"	1
41	EE-2534-1	CABLE ASSEMBLY - ENCODER	1
42	EE-2775-1	CABLE ASSEMBLY - KNIFE LATCH	1
43	EE-2769-21	CABLE ASSEMBLY - PROP. FLOW CONTL VALVE	1
44	EE-1688-1	CABLE ASSEMBLY - PRESET	1
45	EE-2769-11	CABLE ASSEMBLY - CUT SOLENOID "B"	1
46	EE-2769-3	CABLE ASSEMBLY - ADJUST. PRESS. SOL.	1
47	E-2066-3	CONNECTOR - PLUG IN TERM. 3 POLE	2
48	E-2066-12	CONNECTOR - PLUG-IN PCB TERM. BLOCK	1
49	EE-3060	WIRE ASSEMBLIES - CUT LIST	1
50	E-1356-133	LABEL - TERMINAL BLOCK	1

NO.	PART NO.	DESCRIPTION OF ACCESSORIES	QTY
51	E-1356-134	LABEL - TERMINAL BLOCK	1
52	EE-2961-24	CABLE ASSEMBLY - FAN	1
53	EE-2961-23	CABLE ASSEMBLY - FILTER/MANIFOLD FANS	1
54	E-1977-3	RAIL - TERMINAL BLOCK, 3" LONG	1
55	E-2066-5	CONNECTOR - PLUG IN PCB TERM. 5 POLE	1
56	E-1214-64	CONNECTOR -1/4" NON-INS RING	1
57	EE-2770-5	PROXIMITY SWITCH ASSEMBLY - KNIFE LATCH	1
58	EE-2770-4	PROXIMITY SWITCH ASSEMBLY - KNIFE UP	1
59	EE-2770-2	PROXIMITY SWITCH ASSEMBLY - CLAMP UP	1
60	EE-2770-3	PROXIMITY SWITCH ASSEMBLY - KNIFE DOWN	1
61	EE-3384	SWITCH ASSEMBLY - CUT BUTTON "B" (RH)	1
62	EE-3385	SWITCH ASSEMBLY - CUT BUTTON "A" (LH)	1
63			
64	S-1781-42	LABEL - GROUND SYMBOL, SECONDARY	2
65	E-2507-4	FIXED BRIDGE - TERMINAL BLOCK, 4 POLE	1
66	H-6910-63205	SCREW - #6-32 X 5/8" BUT HD	2
67	EE-3460-1	CABLE ASM. - CAN 'PLUG', TITAN 265	1
68	E-1429-15	WIRE DUCT - 10-3/4" LONG	1
69	E-2719-15	COVER - WIRE DUCT, 10-3/4" LONG	1
70	E-1143	BRIDGE RECTIFIER - PANEL MOUNT	2
71	47157-7	P.C.B. COVER - CLEAR	1
72	E-2330-3	FUSE - 2A SB, GLASS METRIC (PCF1 & PCF4)	2
73			
74			
75	S-1350-5	CLAMP - CORD GRIP	1
76	E-1453-6	SHRINK TUBING - 1/8" DIA., 1" LONG	2
77	H-6910-404	SCREW - 1/4-20 X 1/2 BUT HD CAP	3
78	H-7324-8	WASHER - 1/4" INT. TOOTHLOCK	3
79	E-1599-11	IC - 32 PIN PACKAGE (BLANK)	1
80	E-2864	SEPARATOR PLATE - TERMINAL BLOCK	1
81	EE-2770-6	PROX. ASM. - FLASE CLAMP	1
82	EE-3219	CABLE ASSEMBLY - CLAMP COMPRESSOR	REF
83	EE-3220	CABLE ASSEMBLY - FOOT SWITCH, AIR CLAMP	REF
84	E-1152-43	STAND-OFF - 2" LONG HEX	2
85	S-1781-35	LABEL - CAUTION, ELECTRICAL SHOCK	1
86	EE-3363	KIT - ELECTRIC EYE SUB-ASM.	1
87	S-1781-197	LABEL - GROUND SYMBOL, PRIMARY	1
88	EE-2855-15	RIBBON CABLE ASSEMBLY - 20 PIN	REF
89	E-2756-3	FILTER - FERRITE CORE	7
90	E-2756-6	FILTER - FERRITE CORE	2
91	EE-2855-16	RIBBON CABLE ASSEMBLY - 14 PIN	REF
92	E-2066-8	CONNECTOR - PLUG-IN PCB TERM. BLOCK	2
93	H-6910-83204	SCREW - #8-32X1/2 BUT HD CAP	1
94	S-1694-2	WIRE TIE - SCREW MOUNT	1
95	EE-1888-24	PROGRAMMED IC CHIP - (USES E-2056-13)	REF
96	H-6993-510	WASHER - 5/16 X 1-1/4 FENDER	1
97	E-2308	FUSE - 3.2A SB MIDGET (F4 & F7)	2

NOTES

13.14 Electrical Panel Assembly – (w/Circuit Breakers)

EE-3470-1, Rev. A

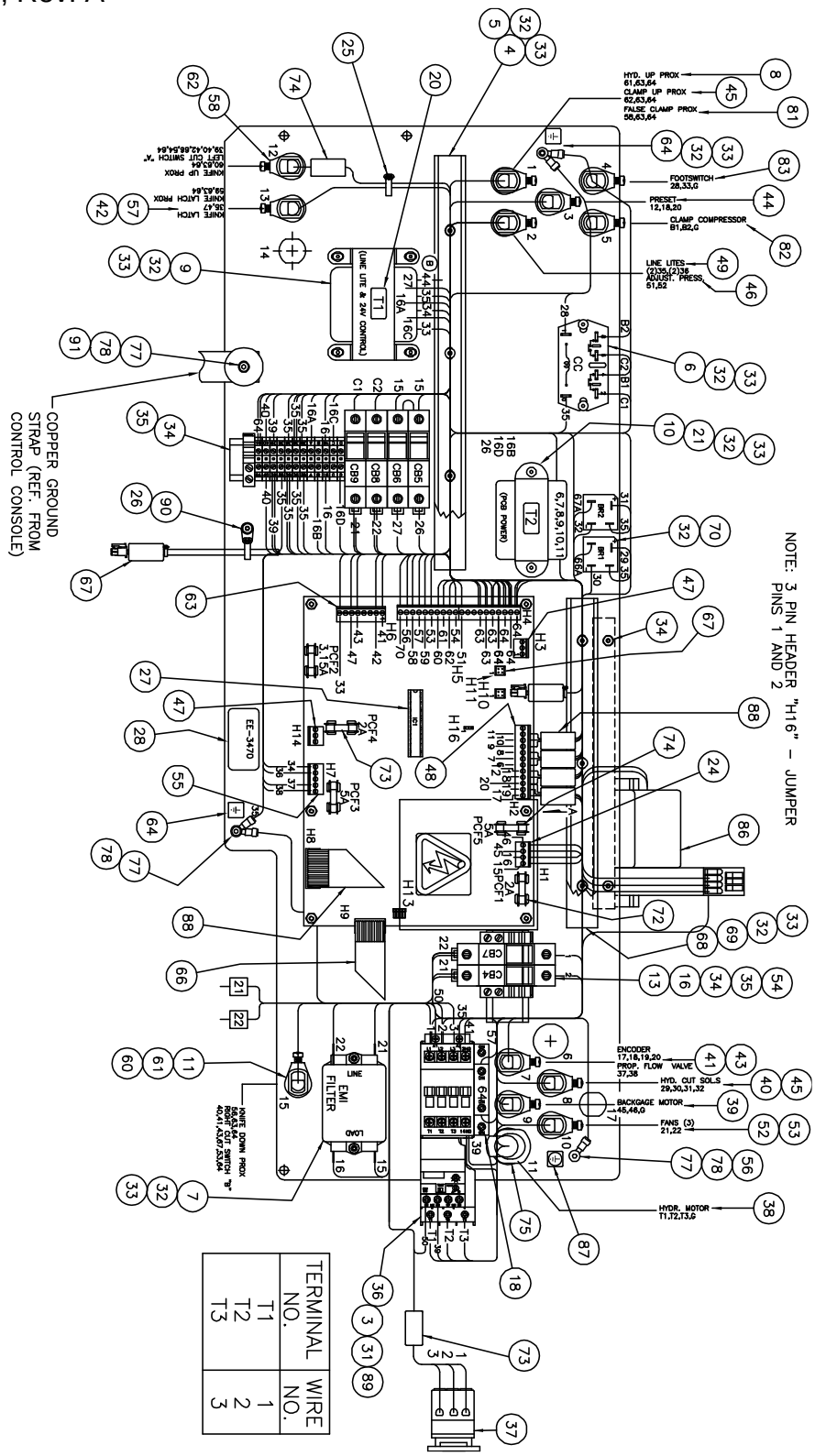

Electrical Panel Assembly (cont.)

TRANSFORMER COLOR CODE			
T1		T2	
WIRE COLOR	WIRE NO.	WIRE COLOR	WIRE NO.
BLACK	27	BLACK	26
BLACK/YELLOW	16A	BLACK/YELLOW	16B
BLACK/RED	16C	BLACK/RED	16D
WHITE	35	BLUE	9
YELLOW	34	BLUE/YELLOW	10
RED	33	BLUE	11
GREEN	44	RED	8
		RED/YELLOW	7
		RED	6

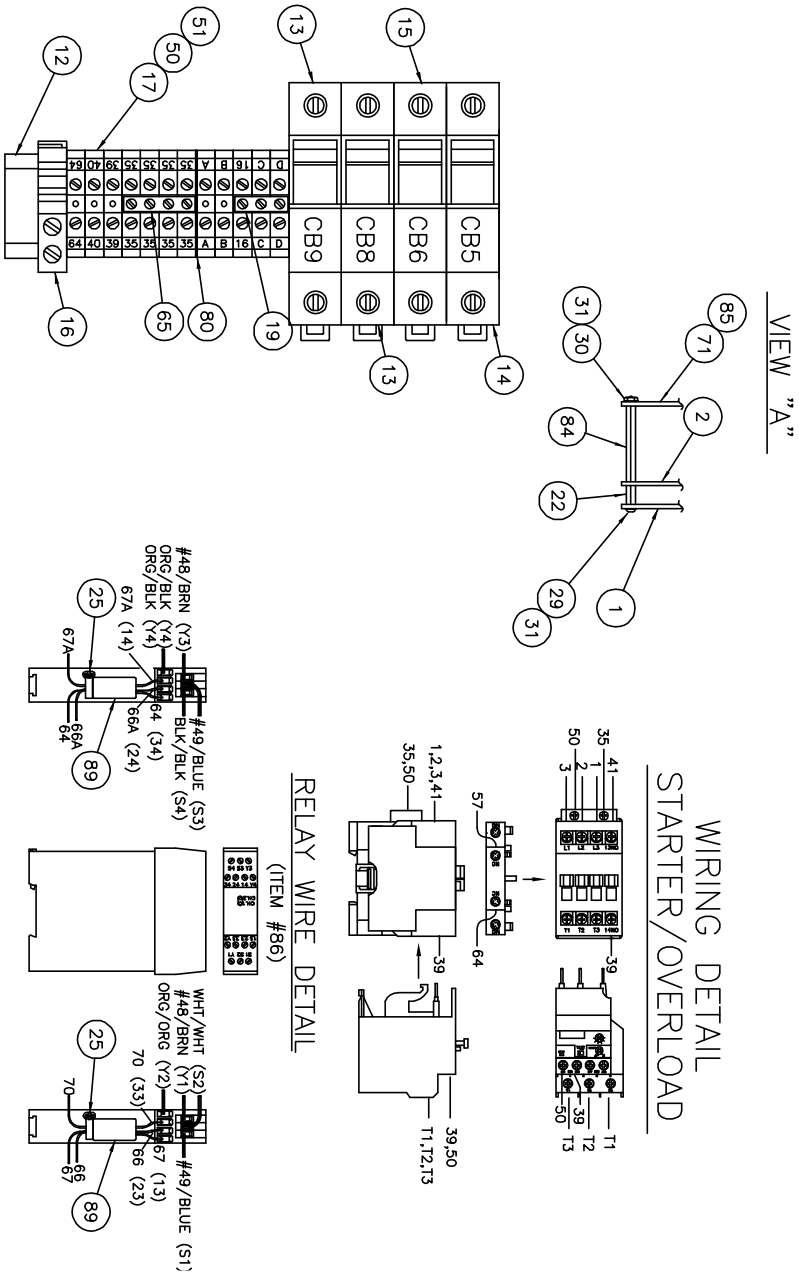

Electrical Panel Assembly (cont.)

NO.	PART NO.	DESCRIPTION OF ACCESSORIES	QTY
1	43006-2	PANEL - ELECTRICAL	1
2	EE-3432-2	P.C.B. ASSEMBLY - CONTROLLER	1
3	E-2805-6	STARTER - CONTACTOR	1
4	E-1429-14	WIRE DUCT - 13-1/2" LONG	1
5	E-2719-14	COVER - WIRE DUCT, 13-1/2" LONG	1
6	E-2232-2	RELAY - CLAMP COMPRESSOR (CC)	1
7	E-2730-3	FILTER - EMI, PANEL MOUNT	1
8	EE-2770-1	PROXIMITY ASSEMBLY - HYDRUALIC UP	1
9	E-2742-6	TRANSFORMER - 120/208/230V PRIM., "T1"	1
10	E-2742-5	TRANSFORMER - 120/230V PRIM., "T2"	1
11	S-1350-16	STRAIN RELIEF - CABLE	12
12	E-1977-18	RAIL - TERMINAL BLOCK, 6-1/2 LONG	1
13	E-3264-5	CIRCUIT BREAKER - 4A (CB4,7,8,9)	4
14	E-3264	CIRCUIT BREAKER - 1/2A (CB5)	1
15	E-3264-1	CIRCUIT BREAKER - 1A (CB6)	1
16	E-2070-1	END BRACKET - TERMINAL BLOCK	4
17	E-2068-8	TERMINAL BLOCK - THROUGH, #10 GA.	12
18	E-2376-8	CONTACTOR - AUXILIARY (SIDE MOUNT)	1
19	E-2507-3	FIXED BRIDGE - TERMINAL BLOCK - 3 POLE	2
20	E-1584-51	LABEL - TRANSFORMER, "T1"	1
21	E-1584-52	LABEL - TRANSFORMER, "T2"	1
22	E-1152-56	STAND-OFF - 1/2" LONG, #6-32 THR'D	6
23	E-2066-10	CONNECTOR - PLUG IN PCB TERMINAL BLOCK	2
24	E-2066-4	CONNECTOR - PLUG IN PCB TERMINAL BLOCK	1
25	S-1694	CABLE TIE	7
26	S-1694-2	CABLE TIE - SCREW MOUNT	1
27	EE-1888-24	IC CHIP - PROGRAMMED (USES E-2056-13)	REF
28	E-1584-( )	LABEL - PART NUMBER/ REVISION LEVEL	1
29	H-6910-63203	SCREW - #6-32 X 3/8" BUT HD	6
30	H-6423-#6	NUT - #6-32 HEX	6
31	H-7324-#6	WASHER - #6 INT. TOOTHLOCK	14
32	H-6910-83204	SCREW - #8-32 X 1/2" BUT	18
33	H-7324-#8	WASHER - #8 INT. TOOTHLOCK	16
34	H-6910-102403	SCREW - #10-24 X 3/8" BUT HD	6
35	H-7324-#10	WASHER - #10 INT. TOOTHLOCK	4

Electrical Panel Assembly (cont.)

NO.	PART NO.	DESCRIPTION OF ACCESSORIES	QTY
36	E-2441-18	OVERLOAD - CONTACTOR, 13A TO 19A	1
37	E-3082	SWITCH BODY - MAIN DISCONNECT	1
38	EE-2858-1	CABLE ASSEMBLY - HYDRAULIC MOTOR	REF
39	EE-2768	CABLE ASSEMBLY - BACKGAGE MOTOR	1
40	EE-2769-10	CABLE ASSEMBLY - CUT SOLENOID "A"	1
41	EE-2534-1	CABLE ASSEMBLY - ENCODER	1
42	EE-2775-1	CABLE ASSEMBLY - KNIFE LATCH	1
43	EE-2769-21	CABLE ASSEMBLY - PROP. FLOW CONTL VALVE	1
44	EE-1688-1	CABLE ASSEMBLY - PRESET	1
45	EE-2769-11	CABLE ASSEMBLY - CUT SOLENOID "B"	1
46	EE-2769-3	CABLE ASSEMBLY - ADJUST. PRESS. SOL.	1
47	E-2066-3	CONNECTOR - PLUG IN TERM. 3 POLE	2
48	E-2066-12	CONNECTOR - PLUG-IN PCB TERM. BLOCK	1
49	EE-3060	WIRE ASSEMBLIES - CUT LIST	1
50	E-1356-133	LABEL - TERMINAL BLOCK	1
51	E-1356-134	LABEL - TERMINAL BLOCK	1
52	EE-2961-24	CABLE ASSEMBLY - FAN	1
53	EE-2961-23	CABLE ASSEMBLY - FILTER/MANIFOLD FANS	1
54	E-1977-3	RAIL - TERMINAL BLOCK, 3" LONG	1
55	E-2066-5	CONNECTOR - PLUG IN PCB TERM. 5 POLE	1
56	E-1214-64	CONNECTOR -1/4" NON-INS RING	1
57	EE-2770-5	PROXIMITY SWITCH ASSEMBLY - KNIFE LATCH	1
58	EE-2770-4	PROXIMITY SWITCH ASSEMBLY - KNIFE UP	1
59	EE-2770-2	PROXIMITY SWITCH ASSEMBLY - CLAMP UP	1
60	EE-2770-3	PROXIMITY SWITCH ASSEMBLY - KNIFE DOWN	1
61	EE-3384	SWITCH ASSEMBLY - CUT BUTTON "B" (RH)	1
62	EE-3385	SWITCH ASSEMBLY - CUT BUTTON "A" (LH)	1
63	E-2066-8	CONNECTOR - PLUG-IN PCB TERM. BLOCK	2
64	S-1781-42	LABEL - GROUND SYMBOL, SECONDARY	2
65	E-2507-4	FIXED BRIDGE - TERMINAL BLOCK, 4 POLE	1
66	EE-2855-16	RIBBON CABLE ASM. - 14 PIN	REF
67	EE-3460-1	CABLE ASM. - CAN 'PLUG', TITAN 265	1
68	E-1429-15	WIRE DUCT - 10-3/4" LONG	1
69	E-2719-15	COVER - WIRE DUCT, 10-3/4" LONG	1

Electrical Panel Assembly (cont.)

NO.	PART NO.	DESCRIPTION OF ACCESSORIES	QTY
71	47157-7	P.C.B. COVER - CLEAR	1
72	E-2330-3	FUSE - 2A SB, GLASS METRIC (PCF1& PCF4)	2
73	E-2756-3	FILTER - FERRITE CORE	7
74	E-2756-6	FILTER - FERRITE CORE	2
75	S-1350-5	CLAMP - CORD GRIP	1
76	E-1453-6	SHRINK TUBING - 1/8" DIA., 1" LONG	2
77	H-6910-404	SCREW - 1/4-20 X 1/2 BUT HD CAP	3
78	H-7324-8	WASHER - 1/4" INT. TOOTHLOCK	3
79			
80	E-2864	SEPARATOR PLATE - TERMINAL BLOCK	1
81	EE-2770-6	PROX. ASM. - FLASE CLAMP	1
82	EE-3219	CABLE ASSEMBLY - CLAMP COMPRESSOR POW.	REF
83	EE-3220	CABLE ASSEMBLY - FOOT SWITCH, AIR CLAMP	REF
84	E-1152-43	STAND-OFF - 2" LONG HEX	2
85	S-1781-35	LABEL - CAUTION, ELECTRICAL SHOCK	1
86	EE-3363	KIT - ELECTRIC EYE SUB-ASM.	1
87	S-1781-197	LABEL - GROUND SYMBOL, PRIMARY	1
88	EE-2855-15	RIBBON CABLE ASSEMBLY - 20 PIN	REF
89	H-6910-63205	SCREW - #6-32X5/8 BUT HD CAP	2
90	H-6910-83204	SCREW - #8-32X1/2 BUT HD CAP	1
91	H-6993-510	WASHER - 5/16 X 1-1/4 FENDER	1

NOTES

13.15 Basic Machine Schematic – Standard Cut Buttons w/fuses

E-3473, Rev. C

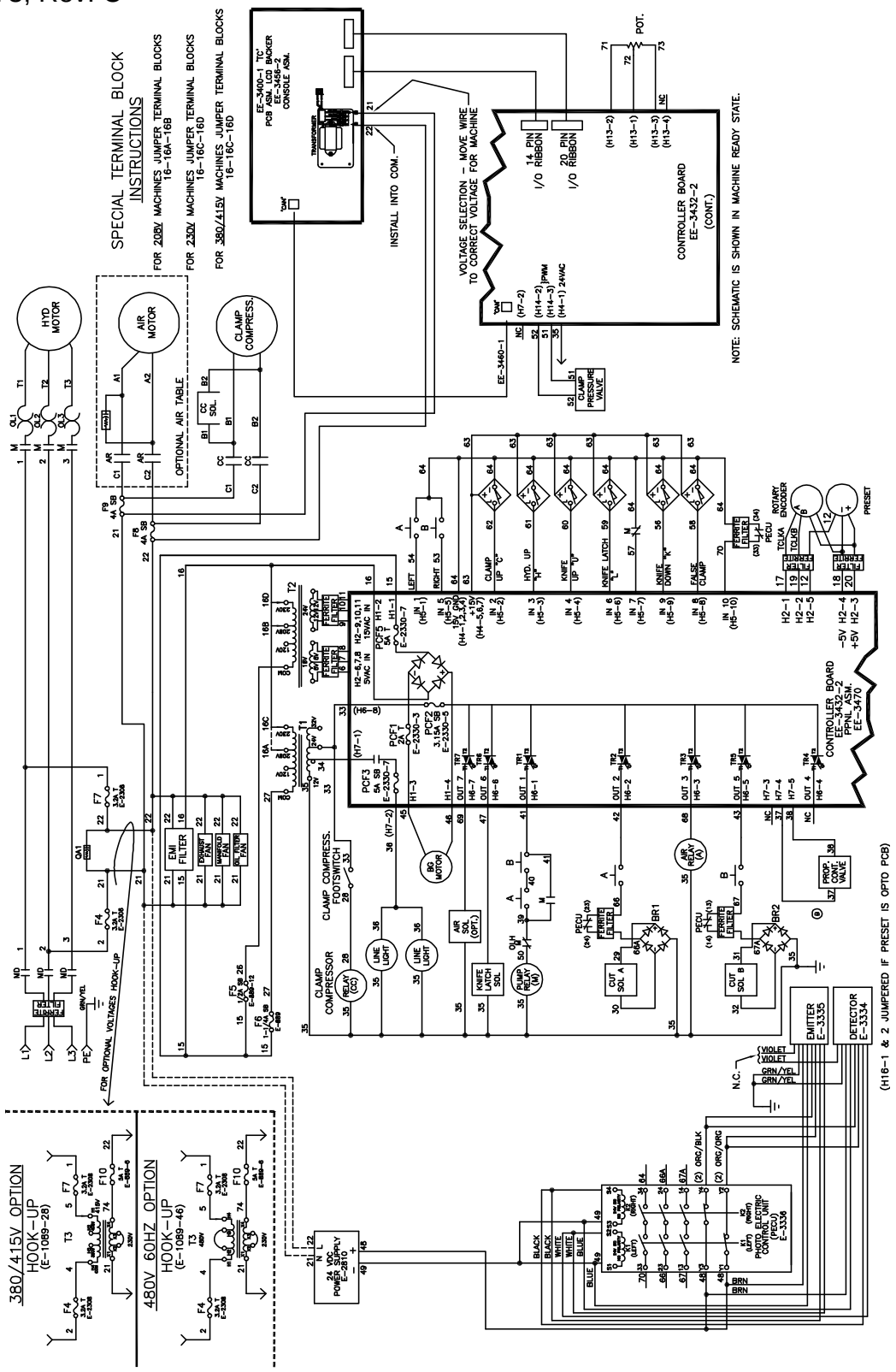

13.16 Basic Machine Schematic – Ergo Cut Buttons w/fuses

E-3473, Rev. C

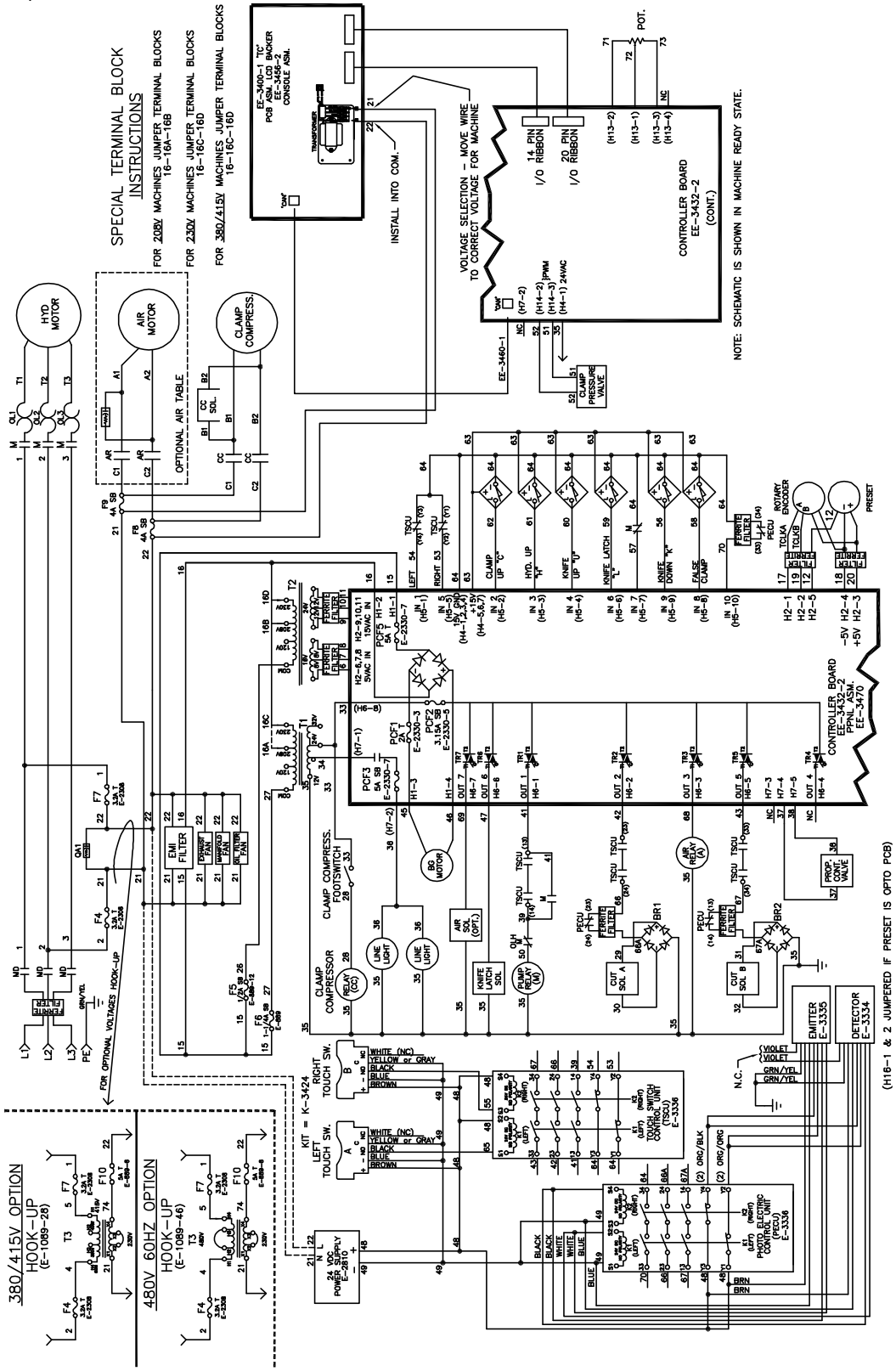

13.17 Basic Machine Schematic – Standard Cut Buttons w/circuit breakers

E-3473-1, Rev. A

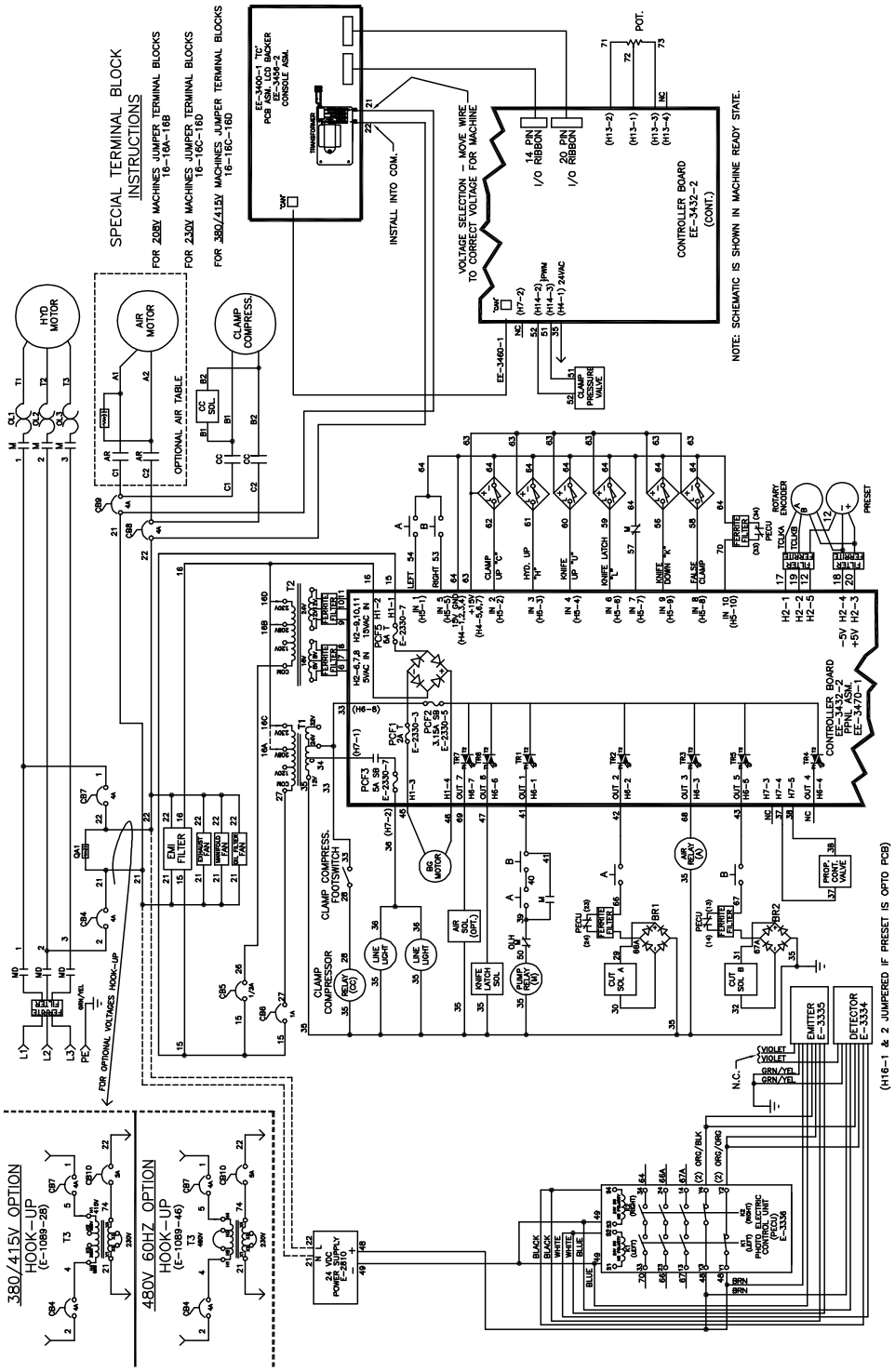

13.18 Basic Machine Schematic – Ergo Cut Buttons (circuit breakers)

E-3473-1, Rev. A

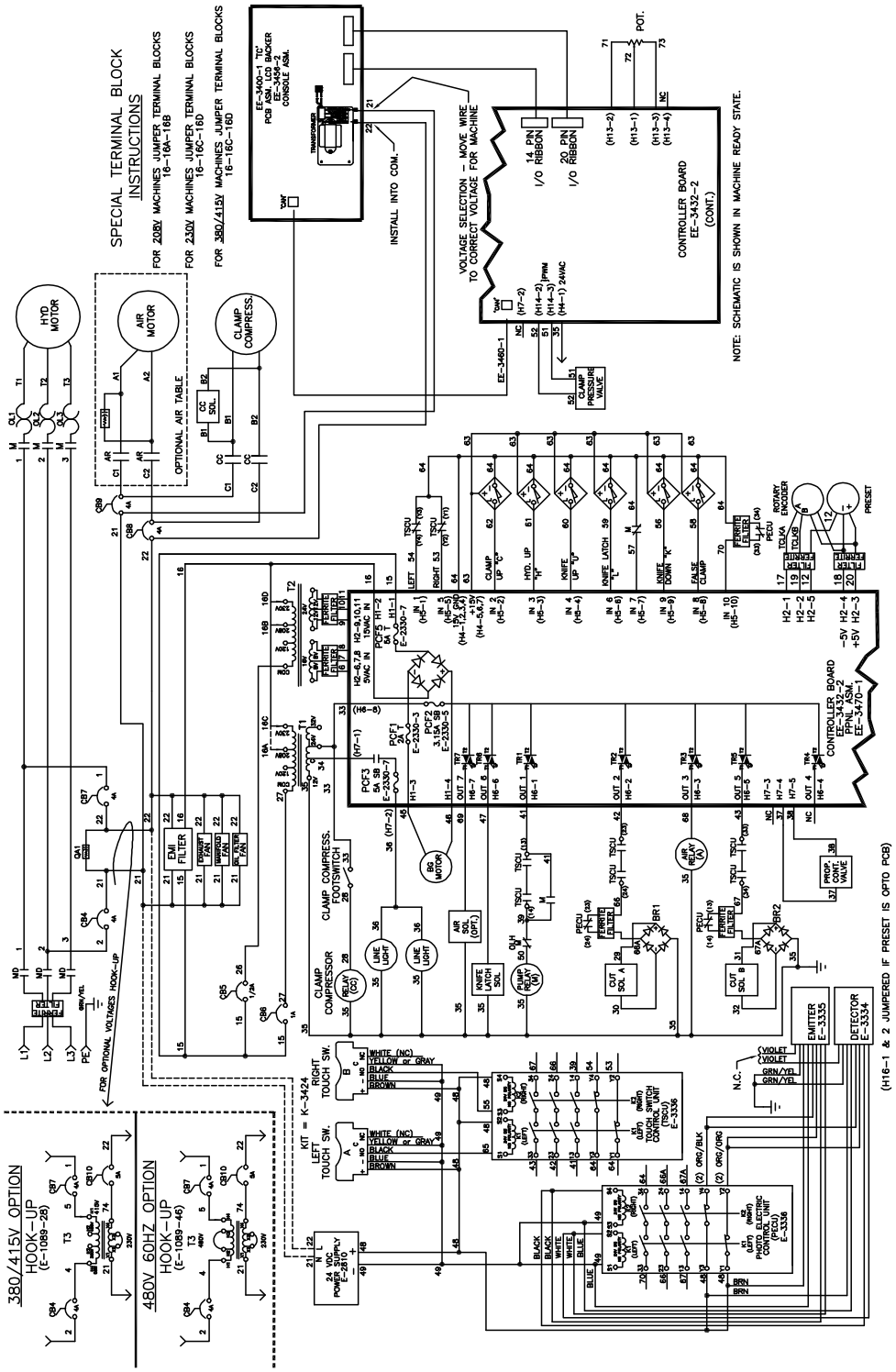

13.19 Electrical Sequence of Operation

NOTE: Please see the section on Hydraulic Sequence of Operation for more details.

Electrical Sequence of Operation	Electrical Schematic References: Section 13.15 page 76
A. Turn Main Disconnect switch to “on” position.	If fuses F4 and F7 or CB4 and CB7 are conductive, power is brought to the main control board. The line lights will illuminate. Power is also brought to the circuit board. Fuse PCF1 and PCF3 are located on the main control board in the power panel. If fuse PCF3 is conductive, power will be supplied to the logic on the board. If the logic is functioning, the operator’s console display will function. If fuse PCF1 and PCF5 are conductive, power will be supplied for backgauge movement.
B. Press PRESET on the screen to direct the backgauge forward through the presetter.	To coordinate the console display with the actual backgauge position, the backgauge must be brought forward through the presetter. When the backgauge position reaches approximately 3.75 inches, the presetter, located beneath the table, is actuated. The display will then count up and down from this point as signals are received from the incremental encoder. For general backgauge information see C below.
C. Backgauge control via front hand knob.	The backgauge control knob on the front of the table is used to manually control the backgauge position. The speed of the backgauge motor will depend upon how far the knob is turned.
D. Make a cut by pressing the cut buttons.	When the CUT buttons are pressed, the hydraulic motor relay (PUMP RELAY) will energize, and power will be brought to the hydraulic motor. The KNIFE LATCH solenoid will energize and the knife latch will pull in. CUT solenoid A, B, and unload valve will energize, and the machine will make a cut. When the knife reaches the down position, the KNIFE DOWN prox (IN 9) will open, which after a slight time delay, causes the logic to de-energize the CUT solenoids, bringing the knife and clamp to the up position. When the clamp reaches the up position, the HYD UP prox. (IN 3) will close, which causes the logic to de-energize the unload valve. The hydraulic motor will stop after a preset idle time.

NOTES

13.20 Hydraulic Power Unit Assembly

H-571-( ), Rev. C (S/N 161106 and below)

PART NO.	VOLTAGE OPTION	A (MOTOR)	B (PUMP)
H-571-2	380-415 V. 3PH. 50 HZ.	E-1600-183	H-387-1
H-571-3	208-230V. 3PH. 60 HZ.	E-1600-181	H-387

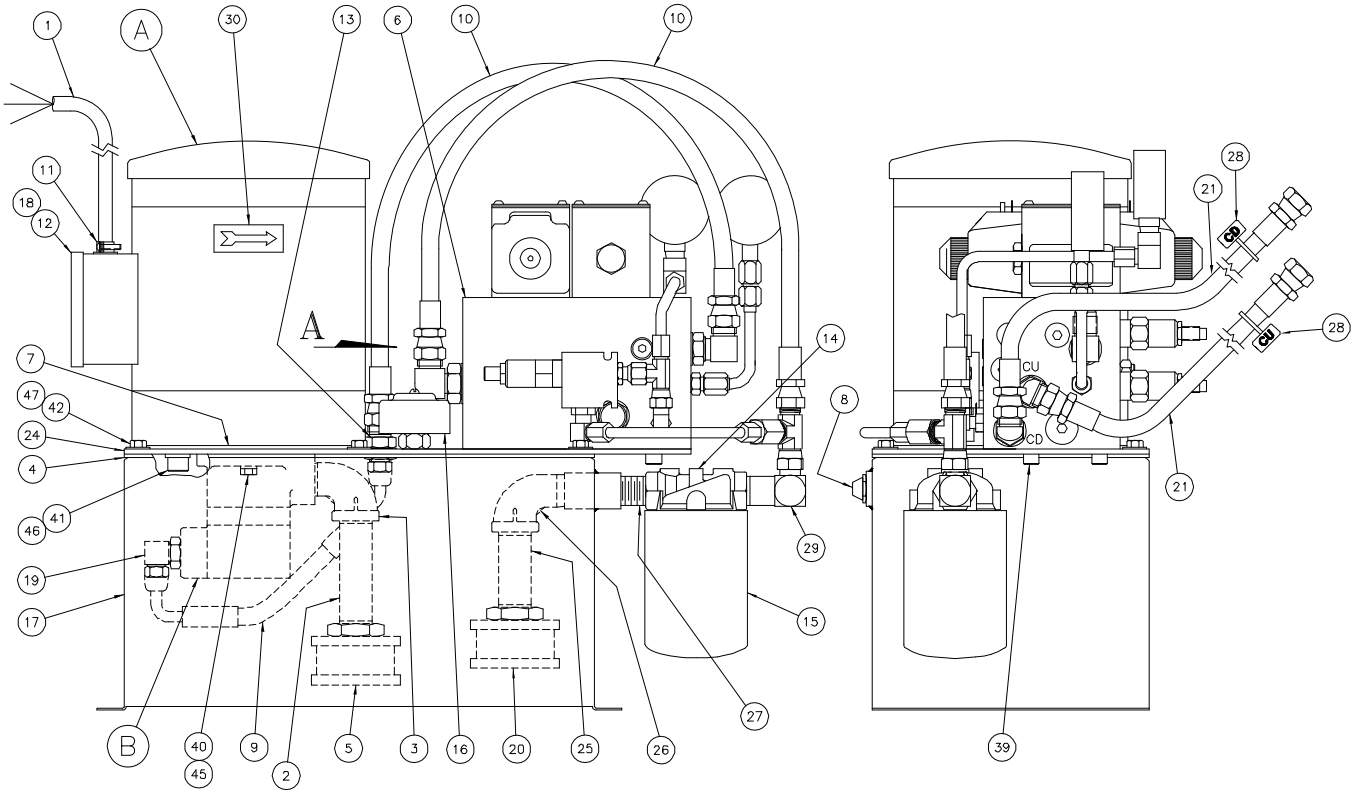

MOTOR WIRING DETAIL
(230V 3PH WIRING SHOWN)

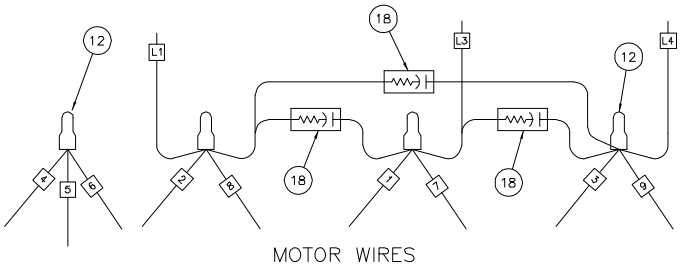

MOTOR WIRES

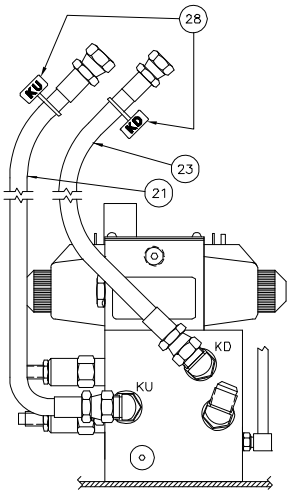

VIEW "A"
FULL SCALE

H-571-( ) Parts List

NO.	PART NO.	DESCRIPTION OF ACCESSORIES	QTY
1	EE-2858-1	CABLE ASM. - HYD. MOTOR	1
2	H-6405-1640	NIPPLE - 1" X 5" PIPE	1
3	H-248-2	ELBOW - 1" X 90%%D STREET	1
4	13947	GASKET - TANK COVER	1
5	H-238-4	STRAINER - OIL	1
6	H-562-1	MANIFOLD ASM.	1
7	13946	GASKET - MOTOR	1
8	H-281-2	SIGHT GAGE	REF
9	H-242-77	HOSE	1
10	H-242-76	HOSE - 28"	2
11	E-894-1	CORD CLAMP	1
12	E-1237-2	WIRE NUT	4
13	H-441	BULKHEAD UNION FITTING 3/4 T. TO 3/4 T.	1
14	H-226-2	HEAD - FILTER, 'O'-RING PORTED	1
15	H-227-1	FILTER	1
16	H-287-2	BREATHER	1
17	44104	TANK	1
18	E-1736-2	QUENCH ARC (3PH 60HZ ONLY)	3
	E-1736-2	QUENCH ARC (1PH ONLY)	1
19	H-230-4	ELBOW - 90° "O" RING TO TUBE	REF
20	H-338	DIFFUSER	1
21	H-242-73	HOSE - 32" CU, CD, & KU	3
22			
23	H-242-75	HOSE - 23-3/4" KD	1
24	44105-1	COVER ASSEMBLY	1
25	H-6405-1232	NIPPLE - 3/4" X 4" PIPE	1
26	H-248-1	ELBOW - 3/4" X 90° STREET	1
27	H-434-1	ADAPTER - STRAIGHT MALE, 'O'-RING TO 'O'-RING	1
28	S-1694-5	TYRAP - ID	4
29	H-230-12	ELBOW - 90° 3/4 T. X 1-1/16 'O' RING	1
30	S-1106	LABEL - DIRECTIONAL ARROW	1
39	H-6918-606	SCREW - 3/8-16 X 3/4 SOC HD. CAP	2
40	H-6913-608	SCREW - 3/8-16 X 1" HEX HD. CAP	2
41	H-6918-808	SCREW - 1/2-13 X 1" SOC. HD. CAP	4
42	H-6913-508	SCREW - 5/16-18 X 1" HEX HD CAP	6
43			
44			
45	H-7327-12	WASHER - 3/8 MED. LOCK	2
46	H-7327-16	WASHER - 1/2 MED. LOCK	4
47	H-7321-5	WASHER - 5/16 PLAIN	6

13.21 Hydraulic Power Unit Assembly

H-571-( ), Rev. E (S/N 161107 and up)

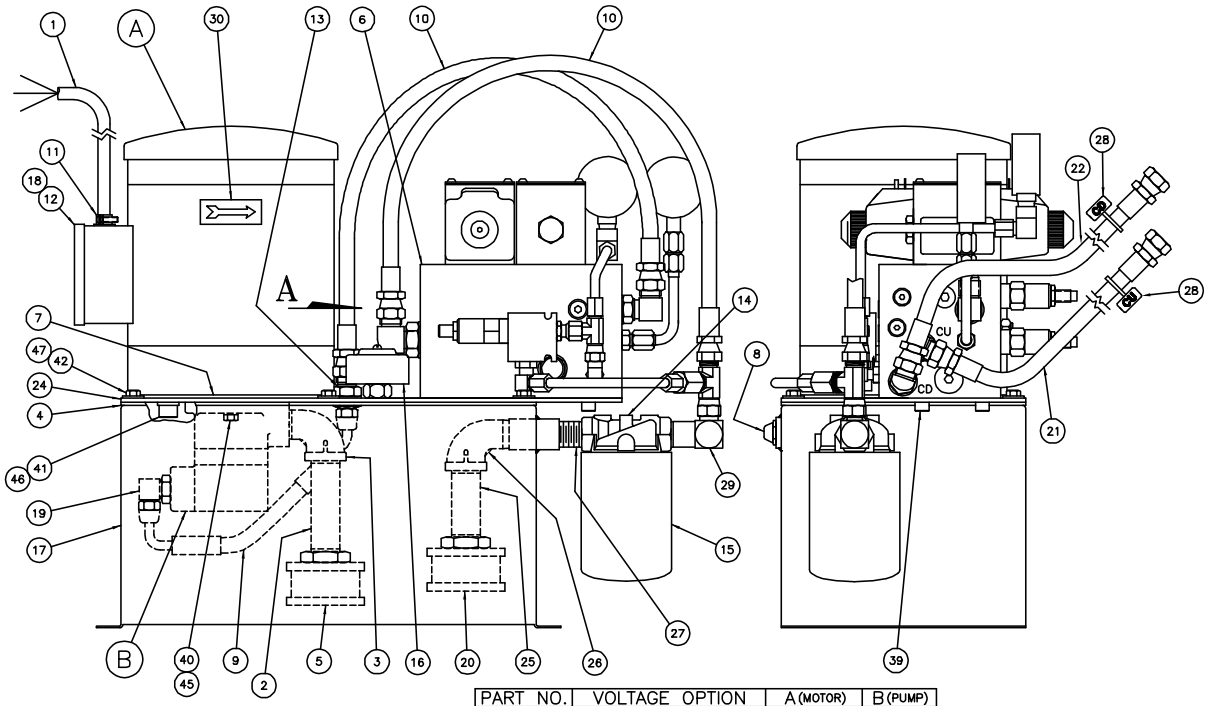

PART NO.	VOLTAGE OPTION	A (MOTOR)	B (PUMP)
H-571-2	380-415 V. 3PH. 50 HZ.	E-1600-183	H-387-1
H-571-3	208-230V. 3PH. 60 HZ.	E-1600-181	H-387

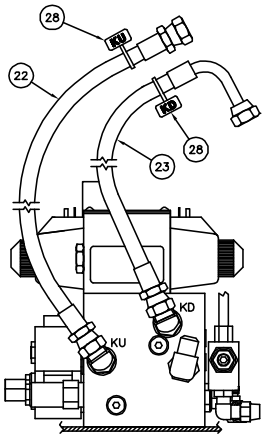

VIEW "A"
FULL SCALE

MOTOR WIRING DETAIL
(230V 3PH WIRING SHOWN)

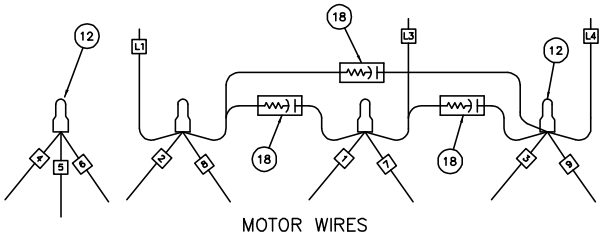

MOTOR WIRES

H-571-( ) Parts List

NO.	PART NO.	DESCRIPTION OF ACCESSORIES	QTY
1	EE-2858-1	CABLE ASM. - HYD. MOTOR	1
2	H-6405-1640	NIPPLE - 1" X 5" PIPE	1
3	H-248-2	ELBOW - 1" X 90%%D STREET	1
4	13947	GASKET - TANK COVER	1
5	H-238-4	STRAINER - OIL	1
6	H-562-1	MANIFOLD ASM.	1
7	13946	GASKET - MOTOR	1
8	H-281-2	SIGHT GAGE	REF
9	H-242-77	HOSE	1
10	H-242-76	HOSE - 28"	2
11	E-894-1	CORD CLAMP	1
12	E-1237-2	WIRE NUT	4
13	H-441	BULKHEAD UNION FITTING 3/4 T. TO 3/4 T.	1
14	H-226-2	HEAD - FILTER, 'O'-RING PORTED	1
15	H-227-1	FILTER	1
16	H-287-2	BREATHER	1
17	44104	TANK	1
18	E-1736-2	QUENCH ARC (3PH 60HZ ONLY)	3
	E-1736-2	QUENCH ARC (1PH ONLY)	1
19	H-230-4	ELBOW - 90° "O" RING TO TUBE	REF
20	H-338	DIFFUSER	1
21	H-242-73	HOSE - 32" CU	1
22	H-242-86	HOSE – 33” KU & CD	2
23	H-242-94	HOSE - 32" W/LONG 90 DEGREE - KD	1
24	44105-1	COVER ASSEMBLY	1
25	H-6405-1232	NIPPLE - 3/4" X 4" PIPE	1
26	H-248-1	ELBOW - 3/4" X 90° STREET	1
27	H-434-1	ADAPTER - STRAIGHT MALE, 'O'-RING TO 'O'-RING	1
28	S-1694-5	TYRAP - ID	4
29	H-230-12	ELBOW - 90° 3/4 T. X 1-1/16 'O' RING	1
30	S-1106	LABEL - DIRECTIONAL ARROW	1
39	H-6918-606	SCREW - 3/8-16 X 3/4 SOC HD. CAP	2
40	H-6913-608	SCREW - 3/8-16 X 1" HEX HD. CAP	2
41	H-6918-808	SCREW - 1/2-13 X 1" SOC. HD. CAP	4
42	H-6913-508	SCREW - 5/16-18 X 1" HEX HD CAP	6
43			
44			
45	H-7327-12	WASHER - 3/8 MED. LOCK	2
46	H-7327-16	WASHER - 1/2 MED. LOCK	4
47	H-7321-5	WASHER - 5/16 PLAIN	6

13.22 Hydraulic Manifold Assembly

H-562-1, Rev. C

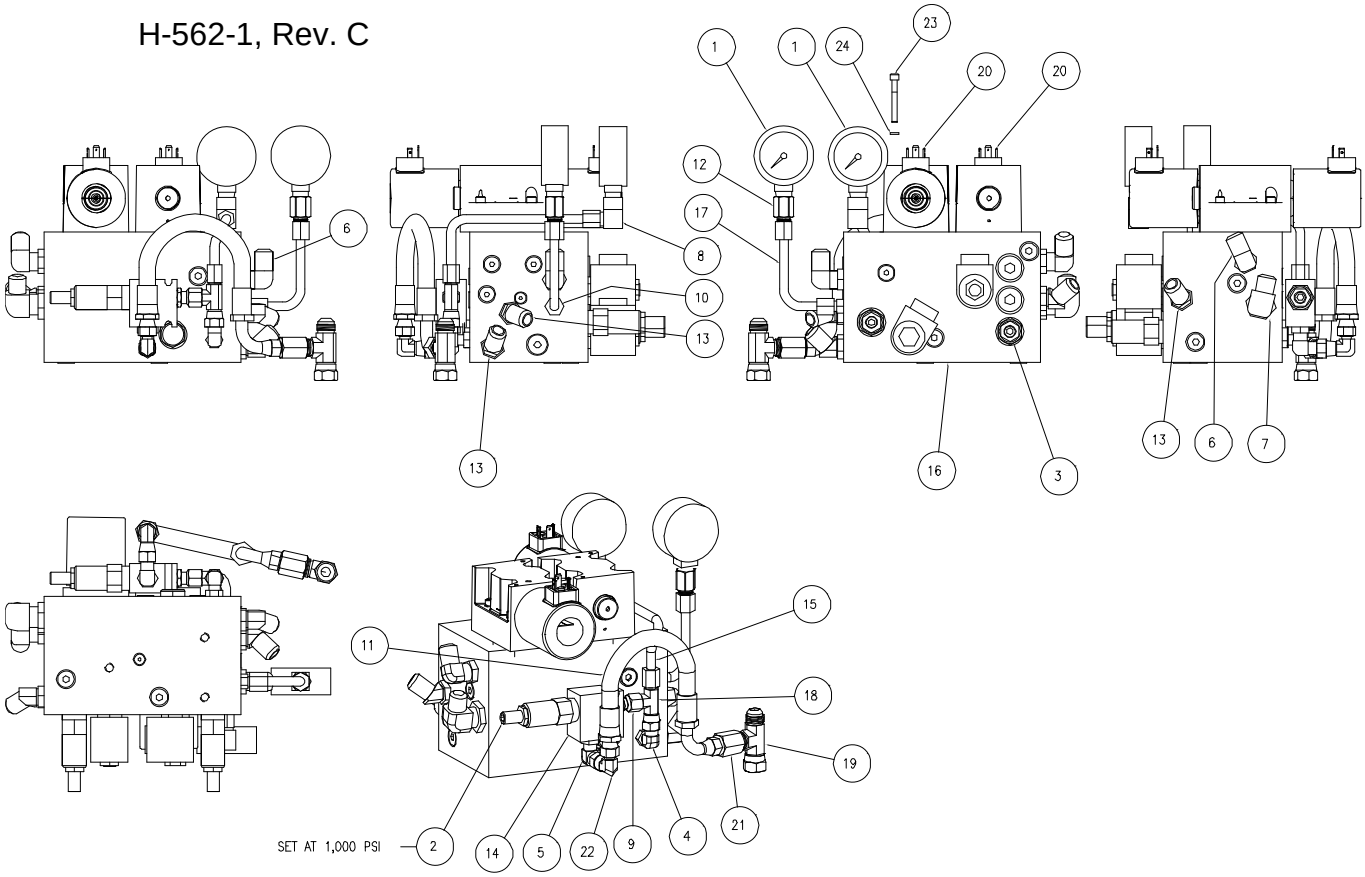

NO.	PART NO.	DESCRIPTION OF ACCESSORIES	QTY
1	8P-629-3	GAUGE	2
2	H-203-26	RELIEF VALVE	1
3	H-203-43	RELIEF VALVE	1
4	H-230	ELBOW- ORING TO TUBE	1
5	H-230-3	ELBOW- ORING TO TUBE	1
6	H-230-4	ELBOW- ORING TO TUBE	2
7	H-230-8	ELBOW- ORING TO TUBE	1
8	H-231-2	ELBOW- PIPE (EXT) TO TUBE	1
9	H-236-10	ADAPTER - 'O' RING TO TUBE	1
10	H-236-5	ADAPTER - 'O' RING TO TUBE	1
11	H-242-85	HYDRAULIC HOSE - 13"	1
12	H-253-2	ADAPTER - PIPE (INT) TO TUBE FLANGE	1
13	H-272-3	ELBOW- 45 DEG O-RING TO TUBE	3
14	H-298-3	VALVE BODY	1
15	H-425-3	TUBE ASSEMBLY	1
16	H-468-3	MANIFOLD	1
17	H-518	TUBE	1
18	H-553	TEE - SWIVEL RUN - TUBE	1
19	H-553-1	TEE - SWIVEL RUN - TUBE	1
20	H-557	DIRECTIONAL CONTROL VALVE	2
21	H-570	SWIVEL TO TUBE REDUCER	1
22	H-572	ELBOW - SWIVEL TUBE	1
23	H-6918-414	SCREW - 1/4-20 X 1-3/4 SOCKET HEAD CAP	8
24	H-7329-4	WASHER - 1/4 HIGH COLLAR LOCK	8

13.23 Hydraulic Manifold

H-468-3, Rev. C

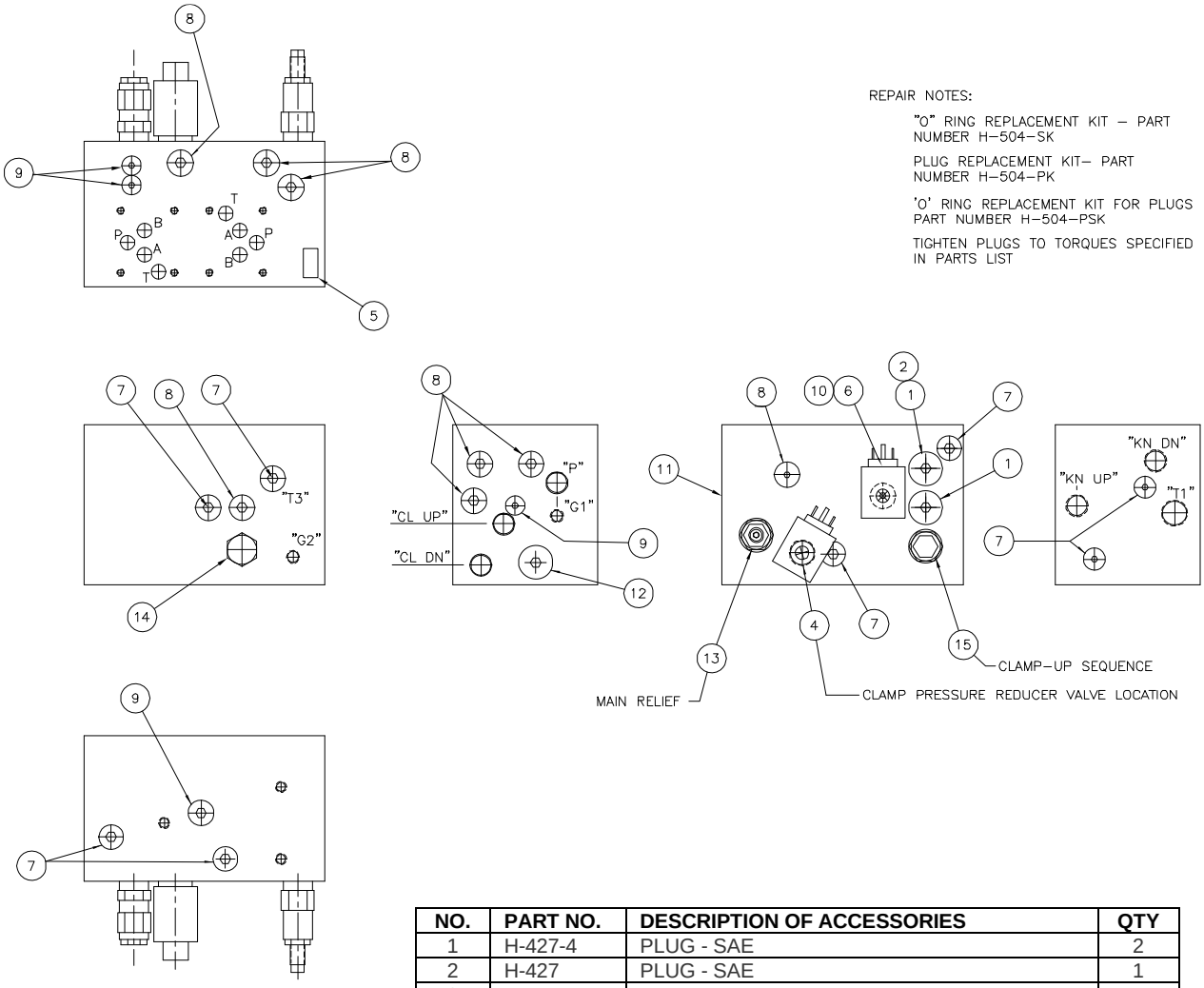

NO.	PART NO.	DESCRIPTION OF ACCESSORIES	QTY
1	H-427-4	PLUG - SAE	2
2	H-427	PLUG - SAE	1
3			
4	H-203-41	PRES. RED. VALVE- ELECTRICAL (TC)	1
5	N/P	NAMEPLATE	1
6	E-1069-26	COIL (24 VAC)	1
7	H-427-5	SAE PLUG (220 IN-LB TORQUE)	8
8	H-427-2	SAE PLUG (180 IN-LB TORQUE) SAE PLUG	9
9	H-427	SAE PLUG (35 IN-LB TORQUE) SAE PLUG	4
10	H-563	PROPORTIONAL FLOW VALVE	1
11	N/P	VALVE MANIFOLD	1
12	H-427-3	SAE PLUG (550 IN-LB TORQUE)	2
13	H-203-26	RELIEF VALVE	1
14	H-203-38	CHECK VALVE – 10 PSI	1
15	H-203-43	RELIEF VALVE	1

13.24 Hydraulic Schematic

H-468-3, Rev. C

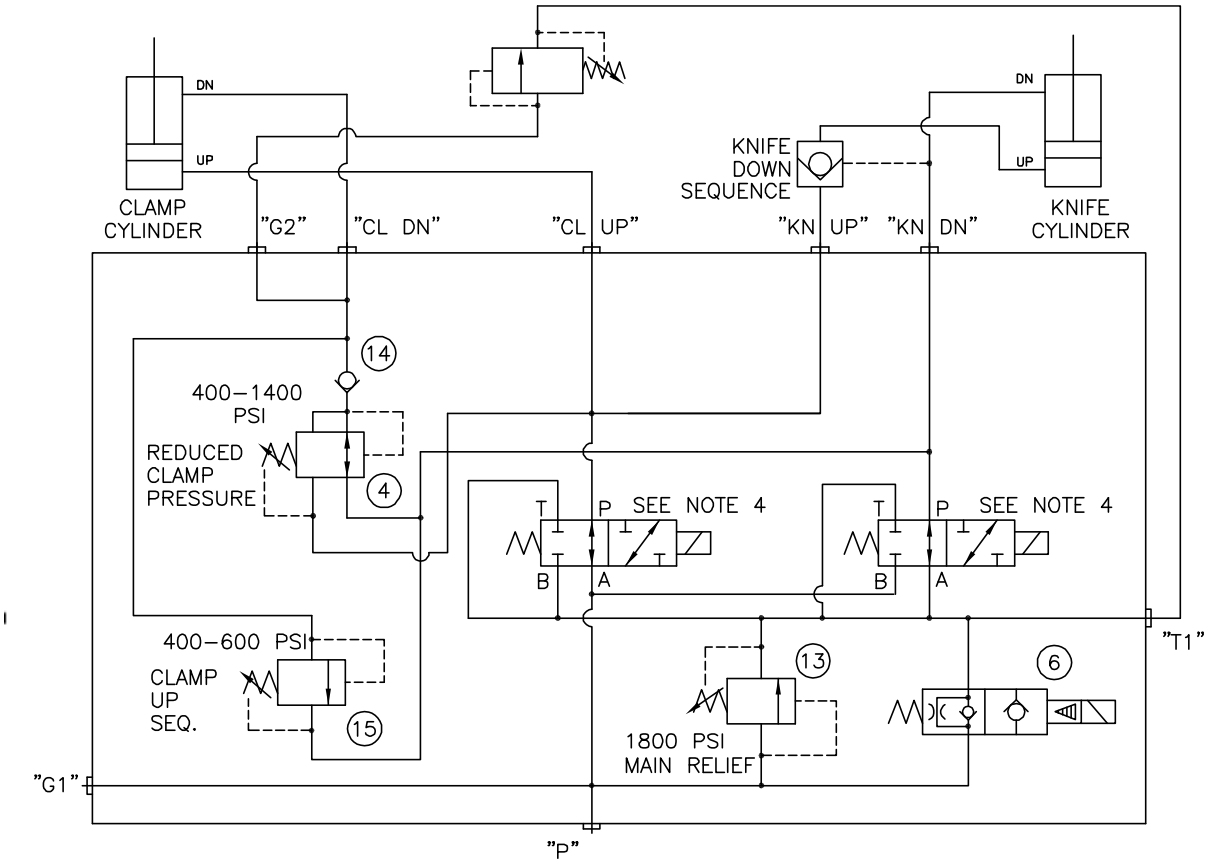

13.25 Hydraulic Sequence of Operation

NOTE: Please see the section on electrical sequence of operation for more details.

Hydraulic Sequence of Operation	**Hydraulic Schematic References: Section 13.24 page 89**
A. Dump solenoid de-energized (open) while outside cut cycle. (Motor and pump run continuously.)	The hydraulic motor drives the pump continuously. When the cut cycle is initiated, the dump solenoid energizes (closes), and the knife latch is retracted.
B. Energize two CUT solenoids. (Knife and Clamp are sent down.)	When the CUT solenoids are energized, oil will flow freely to the knife down (KD) cylinder port and through the pressure reducing valve to the clamp down cylinder port (CD). Both CUT solenoids must energize to continue the sequence. Since oil is restricted by the knife sequence valve and blocked by a check valve, the knife will stay up, and the clamp will start down. When the clamp stops downward motion, the system pressure will rise. Pressure in the clamp down line will level off to the setting of the pressure reducing valve. The system pressure will continue to rise until the knife sequence pressure valve opens allowing the knife to come down. The knife will continue down until the cylinder reaches the extreme of its travel. System pressure will increase until the main system relief valve trips. At this time, the electronics will sense that the knife is down, and de-energize the CUT solenoids.
C. De-energize two CUT solenoids. (Knife and Clamp are sent up.)	With the CUT solenoids de-energized, oil flow is directed to the knife up cylinder port (KU) and the clamp up cylinder port (CU). Since the clamp down port (CD) is blocked by a check valve and the clamp up sequence valve the clamp will stay down while the knife goes up. When the knife reaches the up extreme, system pressure builds until the clamp up sequence valve opens and allows the clamp to move up. System pressure will increase until the main system relief valve trips. At this time, the electronics will sense that the knife and clamp are up and de-energize the dump solenoid sending oil flow back to the tank. The knife latch is engaged.

13.26 Counterbalance Valve Assembly

H-551-4, Rev. A

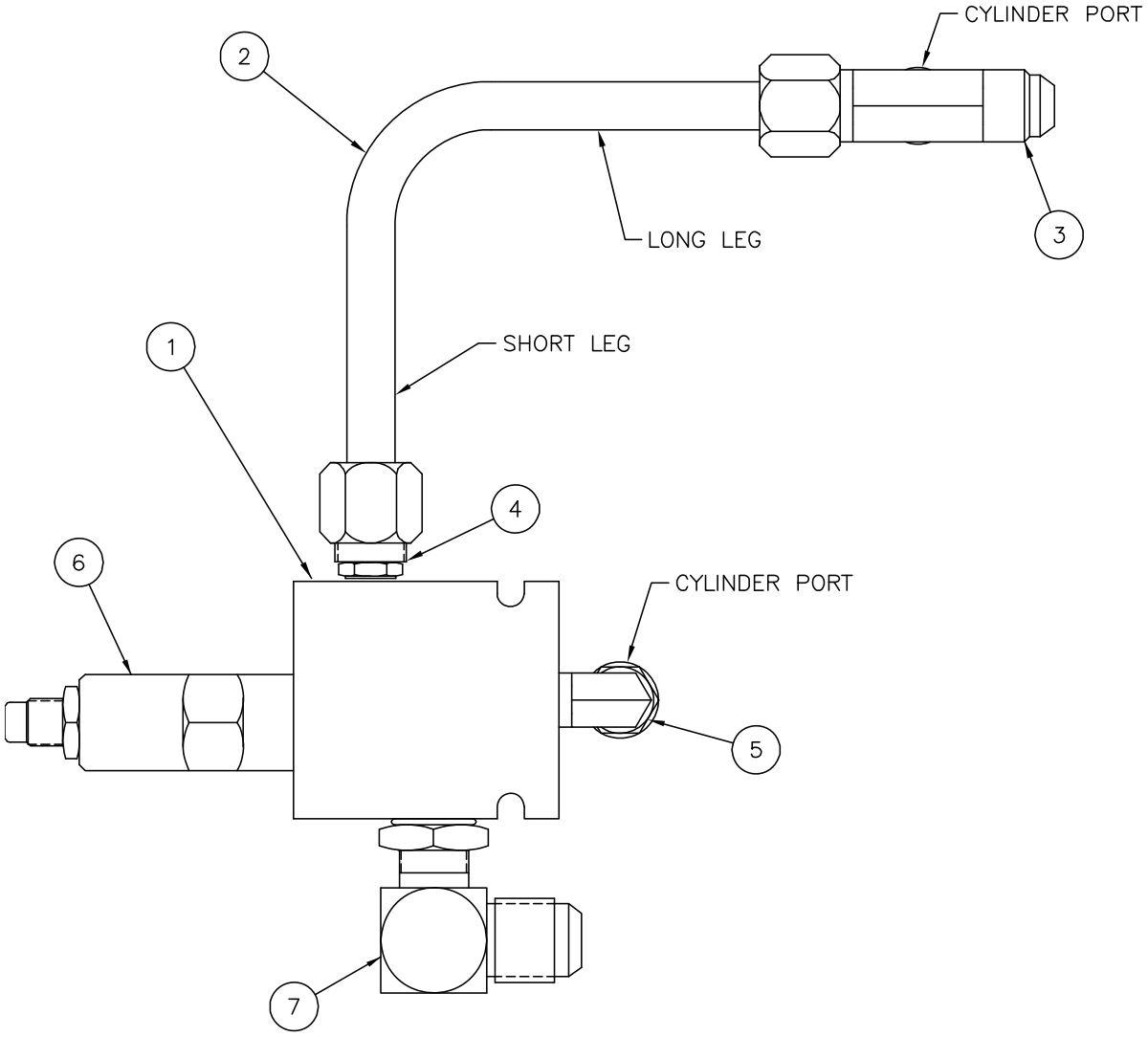

NO.	PART NO.	DESCRIPTION OF ACCESSORIES	QTY
1	56167	VALVE BODY	1
2	H-518-4	TUBE ASSEMBLY	1
3	H-435-3	TEE - (#8) TUBE/(#6) 'O'-RING/(#8) TUBE	1
4	H-236-11	STR. FITTING (#4) 'O' RING TO (#8) TUBE	1
5	H-552	ELBOW - #6 'O' RING TO #6 'O' RING	1
6	H-203-40	VALVE - COUNTER BALANCE	1
7	H-230-6	ELBOW - 9/16-18 'O' RING TO 3/4-16 TUBE	1

NOTES:

13.27 Electric Eyes Assembly

EE-3363 Sheet 1, Rev. B

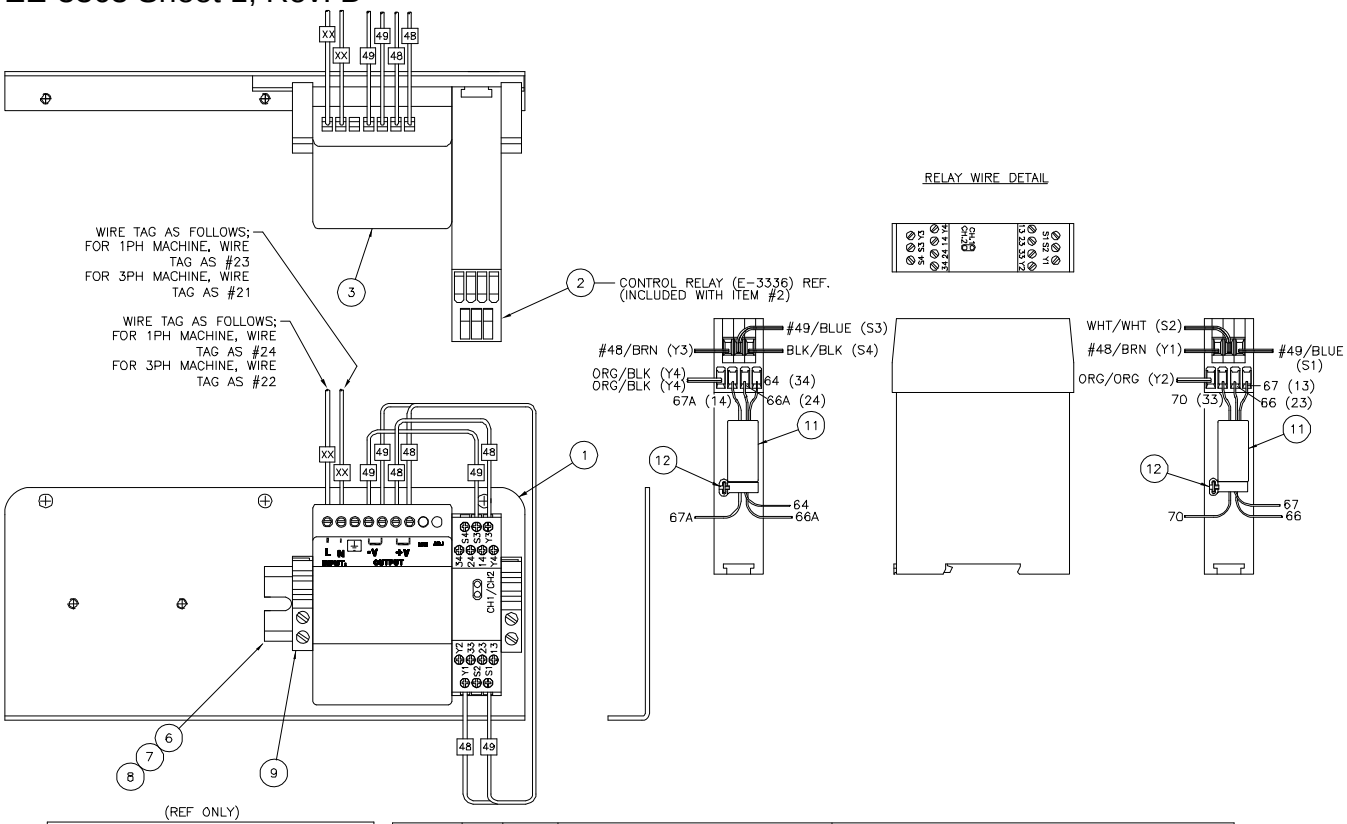

(REF ONLY)

WIRES FROM ELECTRIC EYE CABLES (SHOWN FOR REF ONLY)	
WIRE NO.	WHERE USED
BLACK	EYE CONTROLLER – S4 (BOTH)
WHITE	EYE CONTROLLER – S2 (BOTH)
BROWN	EYE CONTROLLER – Y1(+) EYE CONTROLLER – Y3(+)
ORANGE	EYE CONTROLLER – Y2 (BOTH)
ORG/BLK	EYE CONTROLLER – Y4 (BOTH)
VIOLET	NOT USED (WIRE NUT TOGETHER)
BLUE	EYE CONTROLLER – S1(–) EYE CONTROLLER – S3(–)
GRN/YEL	MACHINE GND (ATTACH TO BRACKET MOUNTING SCREW) (1) E–1214–49

WIRE NO.	WIRE GA.	CUT LENGTH	WIRE TERMINATION	WHERE USED
21 or 23	18	26"	STRIP BOTH ENDS	POWER SUPPLY TERM. "N" TO 'F4' FUSE HOLDER (PPNL)
22 or 24	18	26"	STRIP BOTH ENDS	POWER SUPPLY TERM. "L" TO 'F7' FUSE HOLDER (PPNL)
49	20	24"	STRIP BOTH ENDS	FROM POWER SUPPLY –V TO EYE CONTROLLER S1
49	20	6"	STRIP BOTH ENDS	FROM POWER SUPPLY –V TO EYE CONTROLLER S3
48	20	23"	STRIP BOTH ENDS	FROM POWER SUPPLY +V TO EYE CONTROLLER Y1
48	20	6"	STRIP BOTH ENDS	FROM POWER SUPPLY +V TO EYE CONTROLLER Y3
66	–	–	–	EYE CONTROLLER TERM. #23 – FROM CUT SW. (REF)
66A	18	25"	STRIP ONE END/1/4" Q.D. OTHER END	EYE CONTROLLER TERM. #24 – HANG LOOSE
67	–	–	–	EYE CONTROLLER TERM. #13– FROM CUT SW. (REF)
67A	18	21"	STRIP ONE END/1/4" Q.D. OTHER END	EYE CONTROLLER TERM. #14 – HANG LOOSE
70	20	18"	STRIP BOTH ENDS	EYE CONTROLLER TERM. #33 – HANG LOOSE
64	20	18"	STRIP BOTH ENDS	EYE CONTROLLER TERM. #34 – HANG LOOSE

NO.	PART NO.	DESCRIPTION OF ACCESSORIES	QTY
1	43100-1	BRACKET - CONTROLLER MOUNT	1
2	E-3370	LIGHT CURTAIN - 16" W/CONTROL RELAY	1
3	E-2810	POWER SUPPLY - 24V OUTPUT	1
4	E-1163-10	WIRE - #20GA. BLACK HOOK-UP 95" TOTAL	1
5	E-709-R	WIRE - #18GA. RED MTW 98" TOTAL	1
6	E-1977-23	RAIL - TERMINAL, 5" LONG	1
7	H-6910-102404	SCREW - #10-24 x 1/2" BUT HD	12
8	H-7324-#10	WASHER - #10 INT. TOTHLOCK	2
9	E-2070-1	END BRACKET - TERMINAL BLOCK	2
10	E-1214-65	CONNECTOR - 1/4" FULLY INS. Q.D.	2
11	E-2756-3	FILTER - FERRITE CORE	2
12	S-1694	TY-RAP	2
13	44173	HOUSING - ELEC EYE, RH	1
14	44172	HOUSING - ELEC EYE, LH	1
15	44174-1	ELEC EYE COVER	2
16	44176	SHIELD - EXTENSION TABLE	1
17	H-6910-404	SCREW - 1/4-20 X 1/2 BUT HEAD	2
18	H-7324-8	WASHER - 1/4 INT TOOTH	2
19	H-6423-#10	NUT - #10-24 HEX KEP	4
20	H-7321-4	WASHER - 1/4 PLAIN	2

EE-3363 Sheet 2

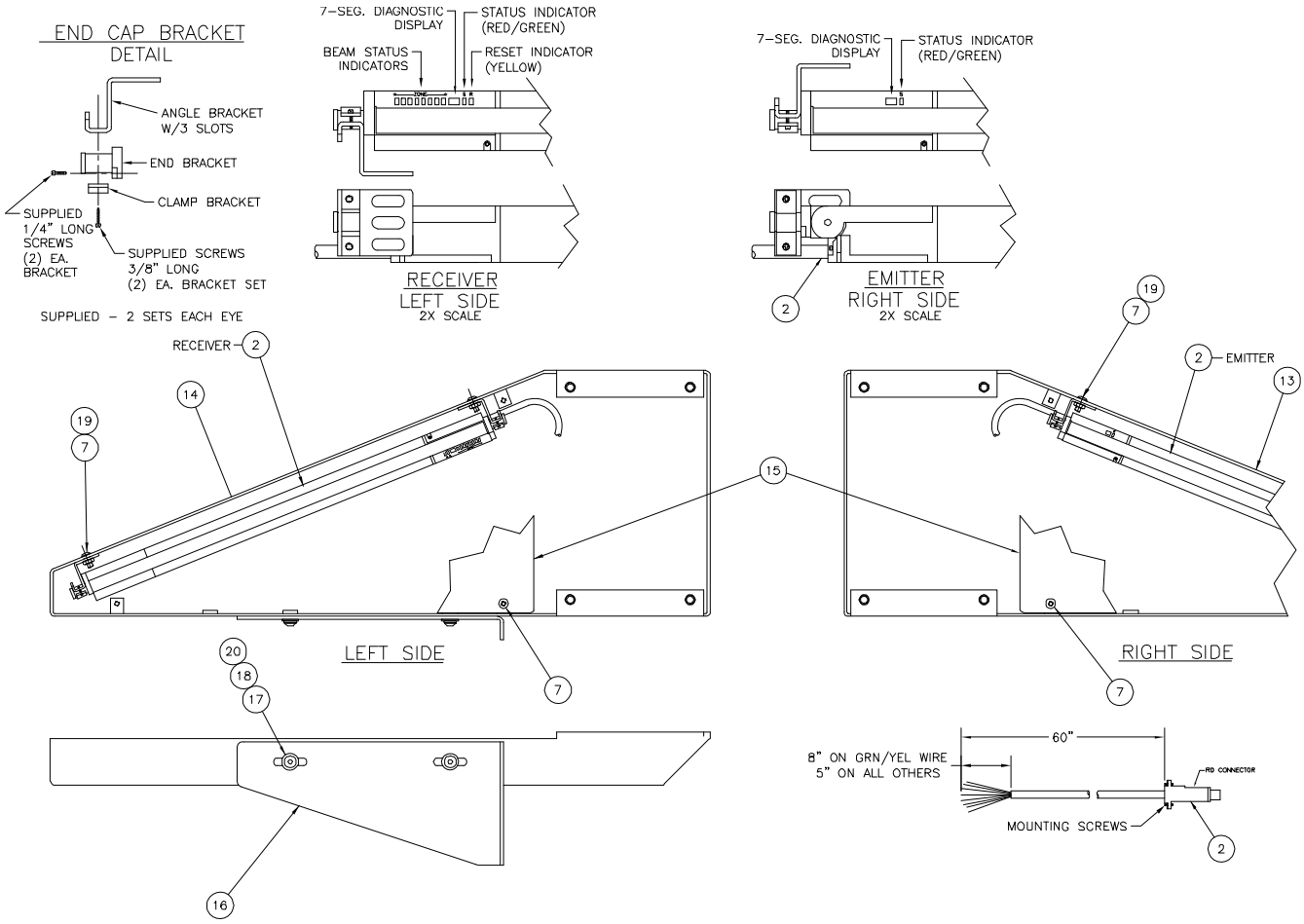

NO.	PART NO.	DESCRIPTION OF ACCESSORIES	QTY
1	43100-1	BRACKET - CONTROLLER MOUNT	1
2	E-3370	LIGHT CURTAIN - 16" W/CONTROL RELAY	1
3	E-2810	POWER SUPPLY - 24V OUTPUT	1
4	E-1163-10	WIRE - #20GA. BLACK HOOK-UP 95" TOTAL	1
5	E-709-R	WIRE - #18GA. RED MTW 98" TOTAL	1
6	E-1977-23	RAIL - TERMINAL, 5" LONG	1
7	H-6910-102404	SCREW - #10-24 x 1/2" BUT HD	12
8	H-7324-#10	WASHER - #10 INT. TOTHLOCK	2
9	E-2070-1	END BRACKET - TERMINAL BLOCK	2
10	E-1214-65	CONNECTOR - 1/4" FULLY INS. Q.D.	2
11	E-2756-3	FILTER - FERRITE CORE	2
12	S-1694	TY-RAP	2
13	44173	HOUSING - ELEC EYE, RH	1
14	44172	HOUSING - ELEC EYE, LH	1
15	44174-1	ELEC EYE COVER	2
16	44176	SHIELD - EXTENSION TABLE	1
17	H-6910-404	SCREW - 1/4-20 X 1/2 BUT HEAD	2
18	H-7324-8	WASHER - 1/4 INT TOOTH	2
19	H-6423-#10	NUT - #10-24 HEX KEP	4
20	H-7321-4	WASHER - 1/4 PLAIN	2

13.28 Cut Button Assembly – Right Hand (Standard)

EE-3384, Rev. C

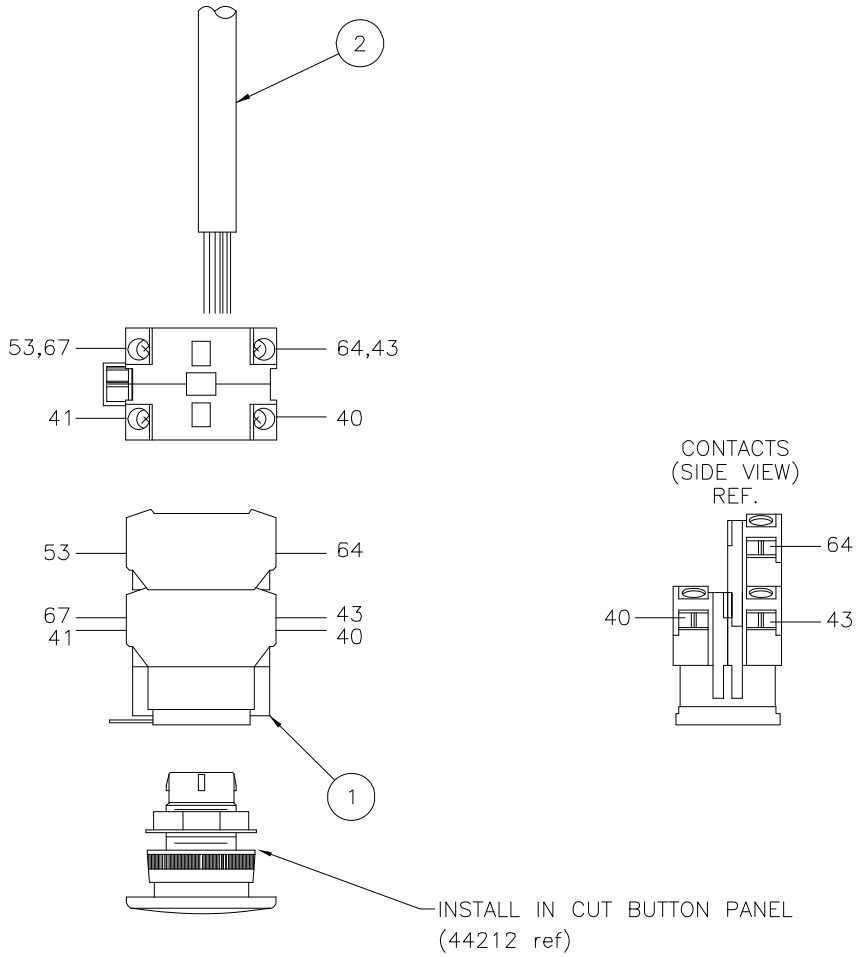

CABLE CHART – #2
RIGHT HAND SWITCH

WIRE NO.	COLOR	SWITCH TERMINAL	WIRE LENGTH	WIRE LOCATION
64	GREEN	3B	27”	H4–1
53	WHITE	3A	31”	H5–5
67	BLACK	2B	26”	PECU #34
43	ORANGE	2A	32”	H6–5
41	BLUE	1B	32”	H6–1
40	RED	1A	35”	TB RT

NO.	PART NO.	DESCRIPTION OF ACCESSORIES	QTY
1	E-3127-4	PUSHBUTTON SWITCH - MUSHROOM, 3 N.O.	1
2	E-2078	CABLE - #18GA. 6 COND. 92" LONG	1

13.29 Cut Button Assembly – Left Hand (Standard)

EE-3385, Rev.C

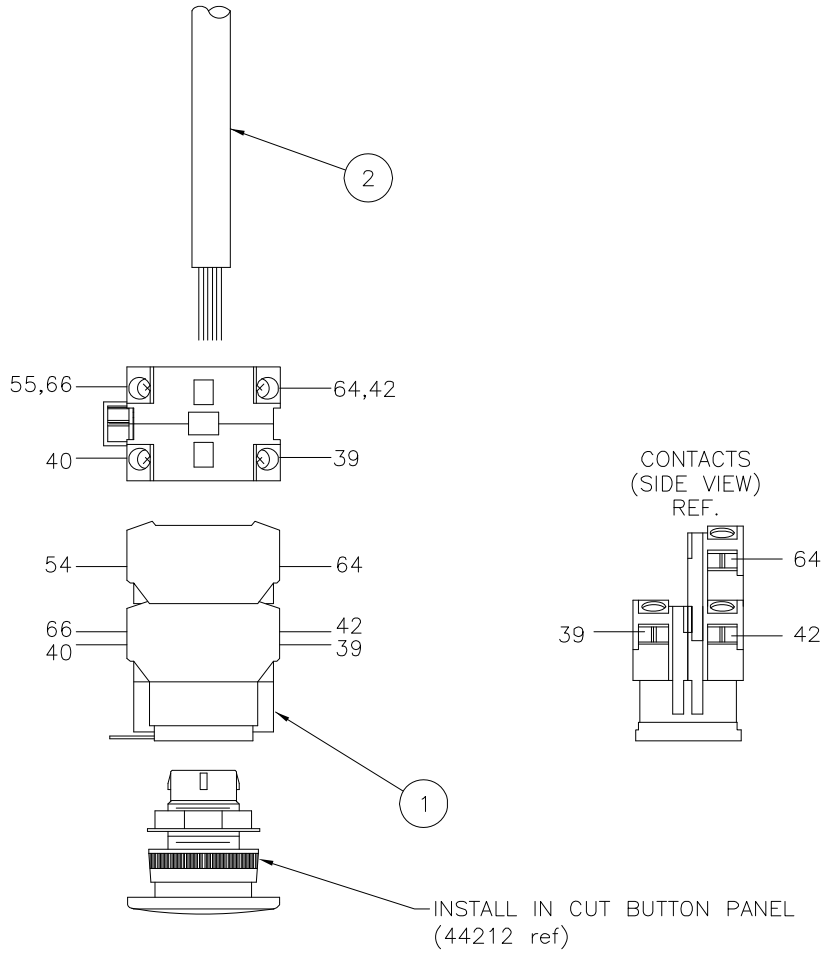

CABLE CHART
LEFT HAND SWITCH

WIRE NO.	COLOR	SWITCH TERMINAL	WIRE LENGTH	WIRE LOCATION
64	GREEN	3B	21'	H4–1
54	WHITE	3A	21"	H5–1
66	BLACK	2B	35"	PECU #23
42	ORANGE	2A	21"	H6–2
39	BLUE	1B	18"	TB LT
40	RED	1A	18"	TB LT

NO.	PART NO.	DESCRIPTION OF ACCESSORIES	QTY
1	E-3127-4	PUSHBUTTON SWITCH - MUSHROOM, 3 N.O.	1
2	E-2078	CABLE - #18GA. 6 COND. 92" LONG	1

13.30 Cut Button Assembly – ErgoTouch Option

K-3367 sh't 1, Rev. D

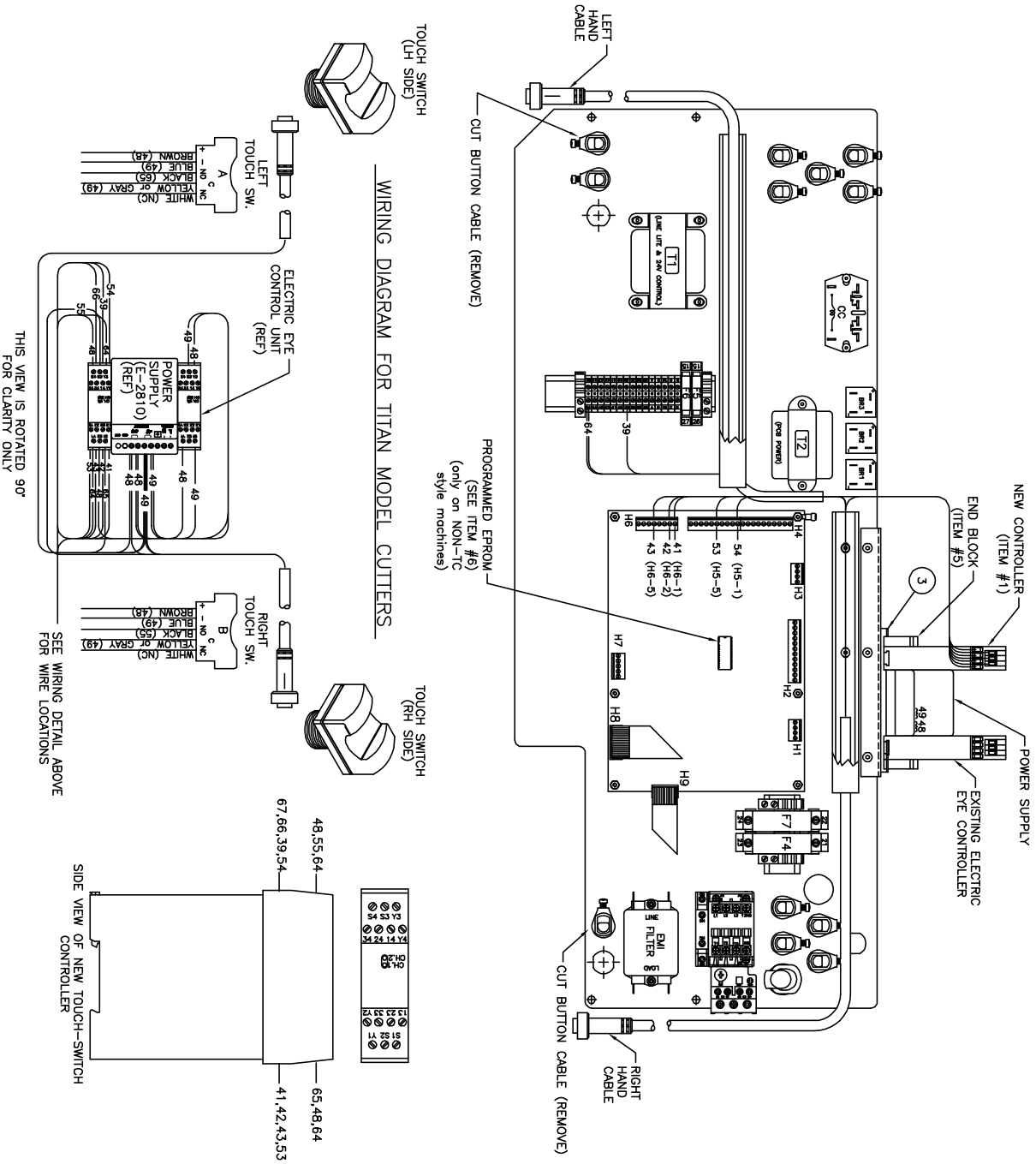

Cut Button Assembly – Ergo Touch Option (Cont.)

INSTALLATION INSTRUCTIONS:

1) On the rear of the machine – Locate the electric eye controller and power supply that is mounted, hanging off the power panel. Remove the existing power supply from the rail – remove the exisiting terminal rail and install the longer supplied rail in it's place. Re–install the power supply and snap the new touch–switch controller (the end that has 'S1,S2 and Y1 is up) onto the rail and lock it in place using the terminal end block (item #5).

2) Follow the details to the left and below to run the wires from the new controller assembly to their proper locations.

3) Follow sheet 2 to mount the new Touch Switch box. Use the screws that previousely mounted the cut switches to mount your new box.

4) There are two cables with plugs hanging off of the new Touch Switch controller. Each cable is marked for the left and right switches. Run these cables down the side of the power panel and drop down each side of the machine. See sheet 2 for routing directions to the Touch Switch box. Use the supplied tyraps to secure the cables to the power panel and away from all moving parts.

5) Mount the new switches into the two side holes (tighten the nuts 1/4 turn pass finger tight)

6) Plug the cables into the new Touch Switches.

7) If this machine is a NON–TC machine – the software will need to be changed – replace the existing programmed Eprom with the supplied programmed Eprom (item #6).

WIRE NO.	TOUCH–SWITCH CONTROLLER	FINAL DESTINATION
39	TERMINAL #14	TERMINAL BLOCKS
41	TERMINAL #13	PCB H6–1
42	TERMINAL #23	PCB H6–2
43	TERMINAL #33	PCB H6–5
48	TERMINAL #S2	POWER SUPPLY
48	TERMINAL #S4	POWER SUPPLY
53	TERMINAL #Y2	PCB H5–5
54	TERMINAL #Y4	PCB H5–1
55	TERMINAL #S3	–
64	TERMINAL #Y1	PCB H4–1
64	TERMINAL #Y3	PCB H4–1
65	TERMINAL #S1	–
66	TERMINAL #24	EYE CONTROLLER TERMINAL #23
67	TERMINAL #34	EYE CONTROLLER TERMINAL #13

NO.	PART NO.	DESCRIPTION OF ACCESSORIES	QTY
1	EE–3350–1	CONTROLLER ASSEMBLY – TOUCH SWITCH	1
2	E–3347	TOUCH SWITCH	2
3	E–1977–19	RAIL – TERMINAL, 5–1/2" LONG	1
4	S–1694–2	TYRAP – WIRE	12
5	E–2070–1	END BLOCK – TERMINAL	1
6	EE–1766–109	IC–PROGRAMMED EPROM (TITAN 265)	1
7	42065	BRACKET – TOUCH–SWITCH, R.H.	1
8	42066	BRACKET – TOUCH–SWITCH, L.H.	1
9	E–2196–17	HOLE PLUG – 1–1/4" DIA.	2
10	K–3367	INSTRUCTIONS – DRAWINGS ONLY – BOTH SHTS	1

13.31 Cut Button Assembly – ErgoTouch Option

K-3367 sh't 2, Rev. D

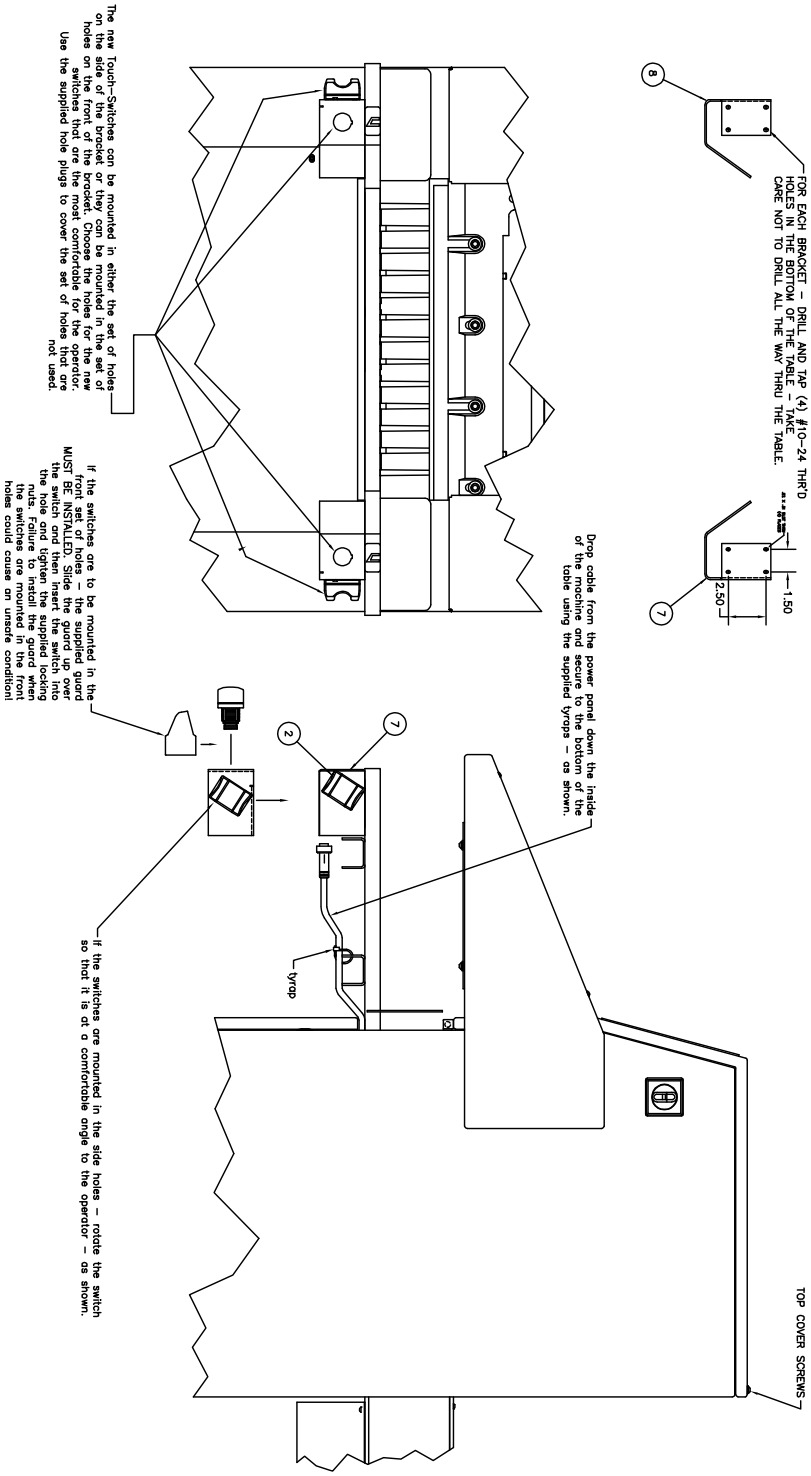

13.32 TC Control Console Assembly

EE-3456-2, Rev. D

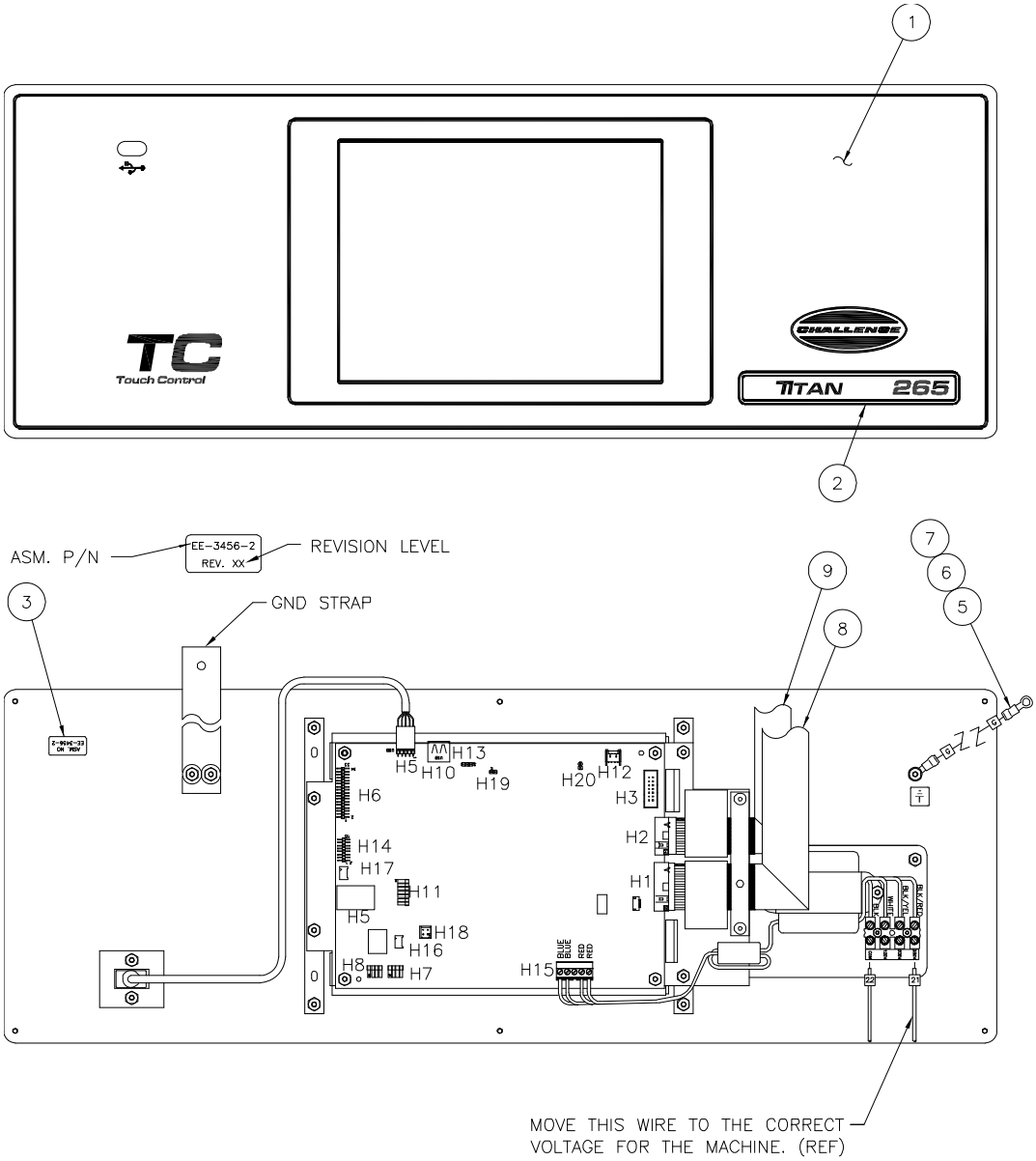

NO.	PART NO.	DESCRIPTION OF ACCESSORIES	QTY
1	EE-3471	PANEL ASM. - FRONT CONTROL, TC	1
2	47701-3	TC PANEL INSERT - TITAN 265	1
3	E-1584-( )	LABEL - ASM. NO./REV. LEVEL	1
4			
5	E-1214-2	CONNECTOR - #6 INS. RING	1
6	E-1214-64	CONNECTOR - 1/4" NON-INS. RING	1
7	E-2743	WIRE - #18 GA. YEL/GREEN MTW 15" LONG	1
8	EE-2855-15	RIBBON CABLE ASM. - 20 POS.	1
9	EE-2855-16	RIBBON CABLE ASM. - 14 POS.	1

13.33 Pre-Clamp Compressor Assembly

44192, Rev. J

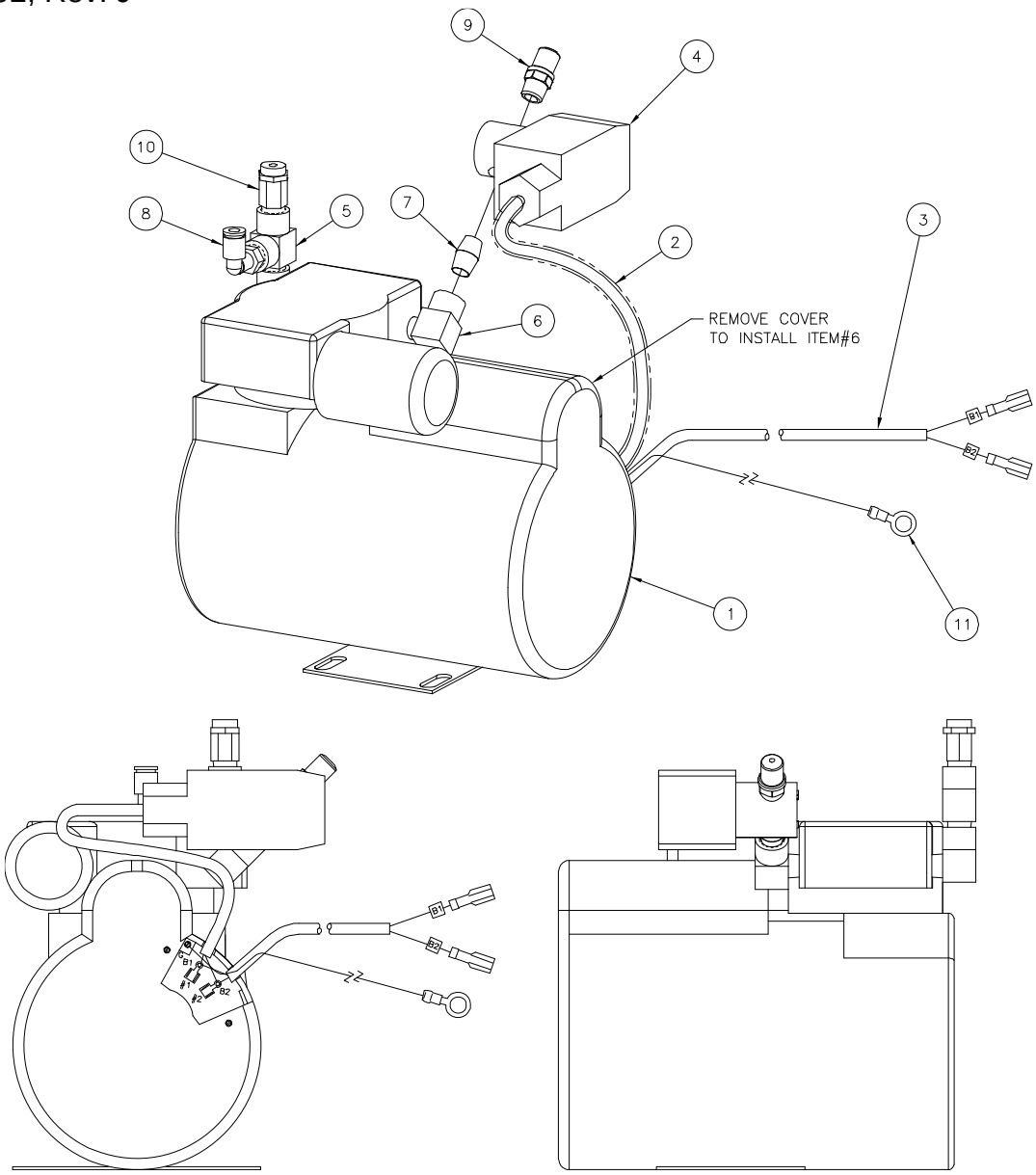

NO.	PART NO.	DESCRIPTION OF ACCESSORIES	QTY
1	47644	COMPRESSOR	1
2	E-1710-3	SPLIT TUBING	12"
3	EE-3210	CABLE ASSEMBLY- COMPRESSOR POWER	1
4	P-521	VALVE- 2-WAY, N.O.	1
5	H-261-3	TEE- 1/4 MALE RUN, BRASS	1
6	H-269-2	ELBOW - 90%%176 STREET, BRASS	2
7	H-6406-407	NIPPLE- 1/4" X 7/8", BRASS	1
8	P-503-402	ELBOW-1/4 TUBE X 1/4 NPT	1
9	P-511	SILENCER - 1/4 NPT	1
10	P-520-60	VARIABLE PRESSURE RELIEF (YELLOW SPRING)	1
11	EE-3212	WIRE ASM. - COMPRESSOR GROUND	1
12	S-1694	TYRAP - WIRE	2
13	E-1214-9	CONNECTOR - #8 RING	2

13.34 Backgauge Control Assembly

49249, Rev. J

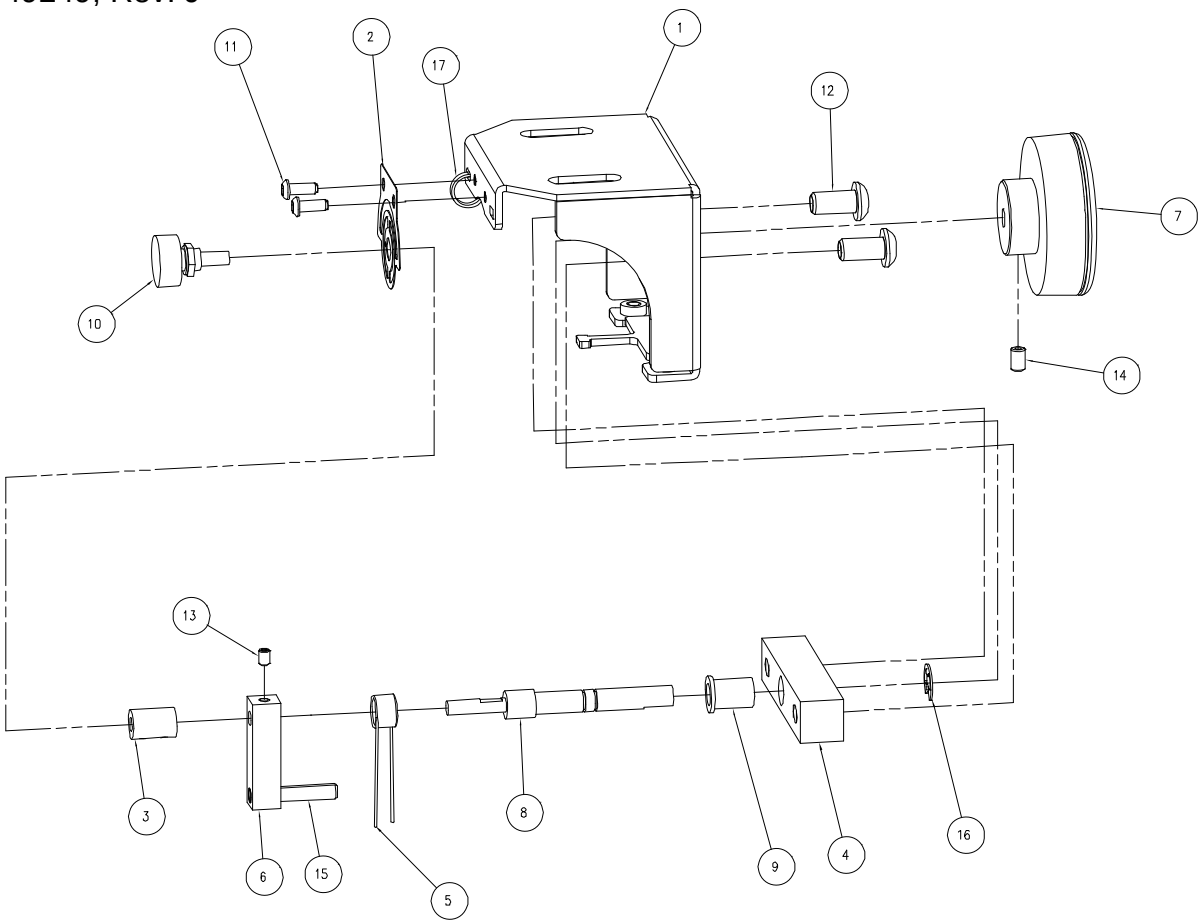

NO.	PART NO.	DESCRIPTION OF ACCESSORIES	QTY
1	49248-1	BACKGAUGE CONTROL BRACKET	1
2	49261	ENCODER MOUNTING BRACKET	1
3	56676-1	COUPLING	1
4	63210-1	FRONT PILLOW BLOCK	1
5	63213	TORSION SPRING	1
6	63214	ACTUATOR	1
7	63218	KNOB	1
8	63221	CONTROL KNOB SHAFT	1
9	EE-3213	POTENTIOMETER	1
10	H-6423-#10	NUT - #10-24 HEX KEP	2
11	H-6910-102404	SCREW - #10-24 X 1/2 BUTTON HEAD CAP	2
12	H-6910-606	SCREW - 3/8-16 X 3/4 BUTTON HEAD CAP	2
13	H-6940-102404	SCREW - #10-24 X 1/4 FLAT SOC SET	1
14	H-6940-406	SCREW - 1/4-20 X 3/8 FLAT SOC SET	1
15	H-21S-250-1500	ROLL PIN - 1/4 X 1-1/2	1
16	S-1193-37	E-RING - 3/8"	1
17	S-1694	TYRAP	1

13.35 Knife Latch Assembly

47568-1, Rev. A

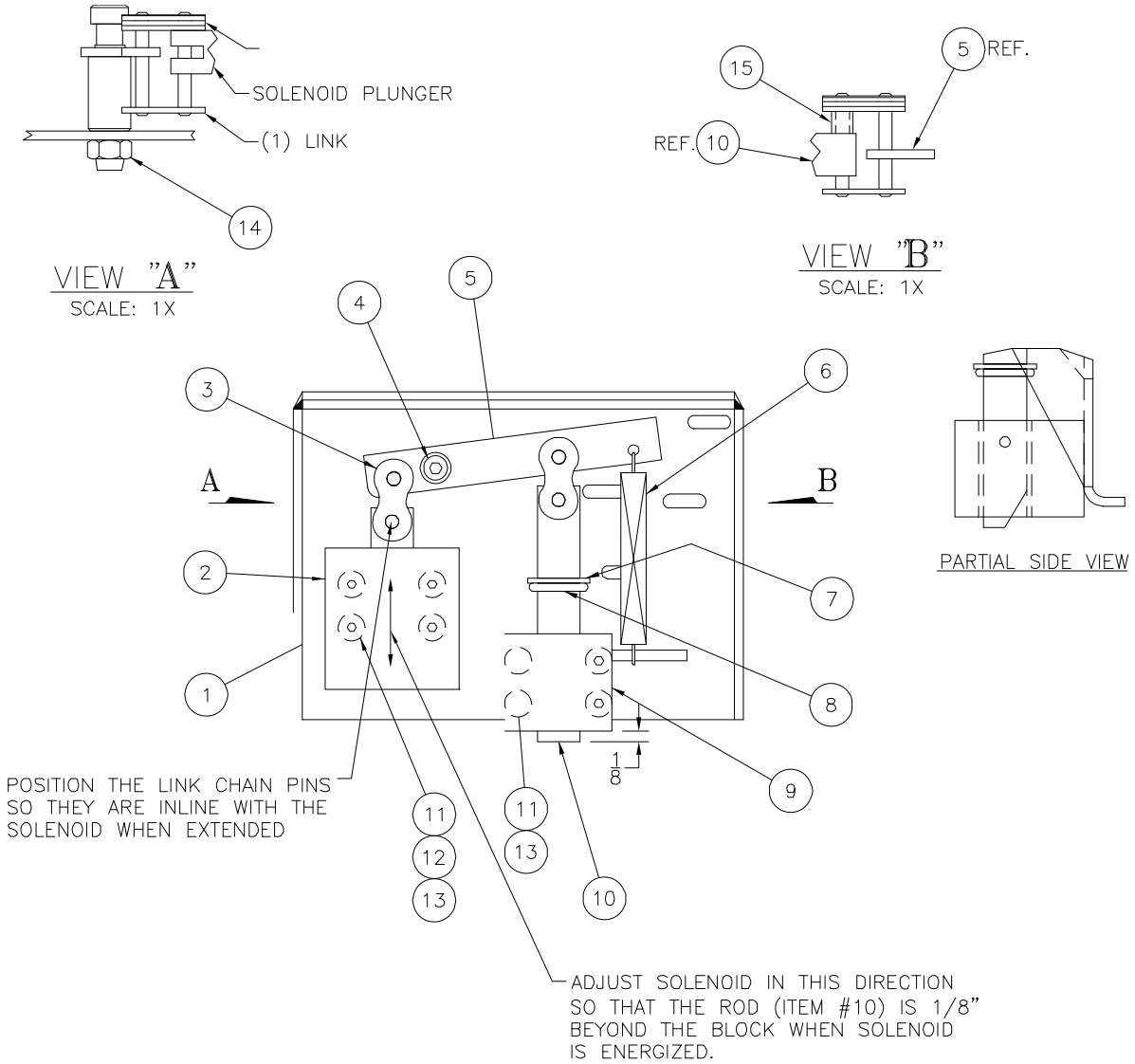

NO.	PART NO.	DESCRIPTION OF ACCESSORIES	QTY
1	47505-1	PLATE- KNIFE LATCH MOUNT	1
2	E-974-3	SOLENOID	1
3	47567	LINK- CHAIN	2
4	H-5254-510	SCREW- 5/16 X 1-1/4 SOC. SHOULDER	1
5	47553-1	LINK ASSEMBLY- KNIFE LATCH	1
6	41117-1	SPRING- EXTENSION	1
7	H-6451-0500	RETAINING RING- GRIPPING EXTERNAL	1
8	S-1810-9	O' RING	1
9	41112-2	ASSEMBLY- KNIFE LATCH BLOCK	1
10	41116-2	ROD- KNIFE LATCH	1
11	H-6910-83203	SCREW- #8-32 X 3/8 BUT. HD. SOC.	8
12	H-7321-#8	WASHER- #8 SAE FLT PLTD	4
13	H-7324-#8	WASHER- #8 INT. TOOTH	8
14	H-5247-4	NUT- 1/4-20 FLEX LOCK	1
15	E-1152-9	SPACER	1

13.36 Line Light Assembly

EE-2779, Rev. D

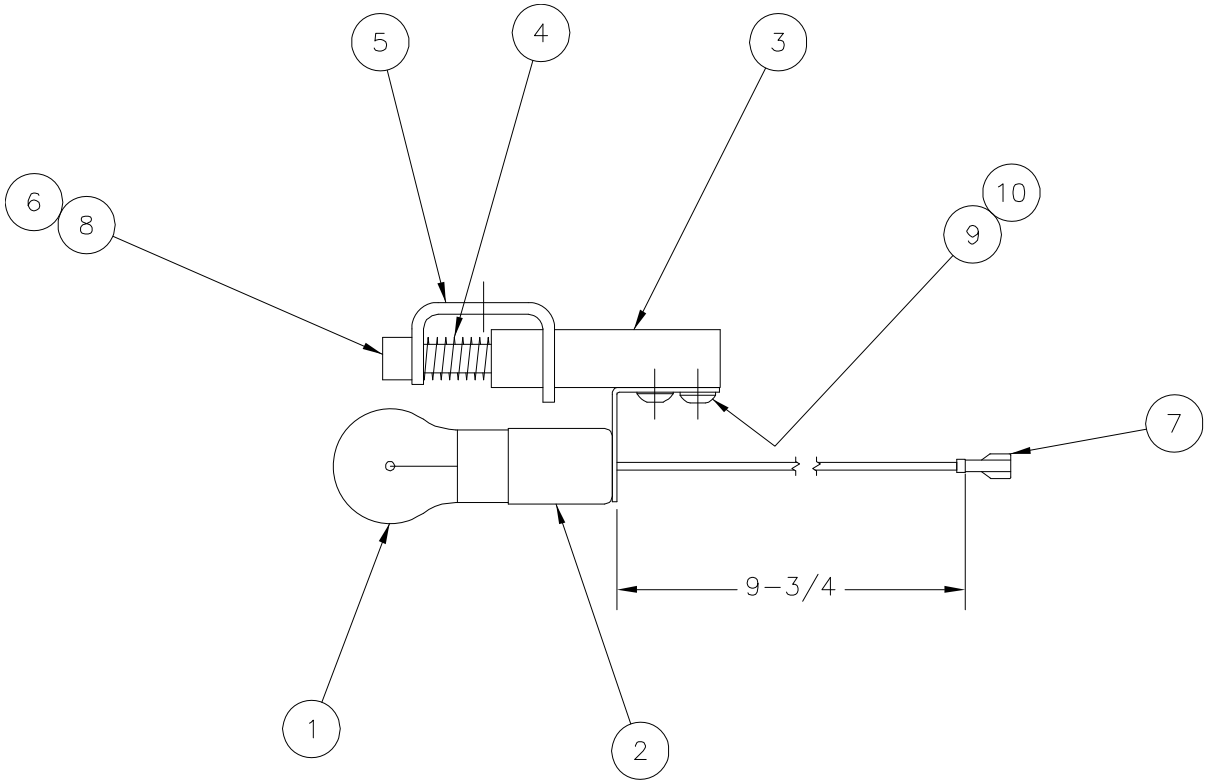

NO.	PART NO.	DESCRIPTION OF ACCESSORIES	QTY
1	E-967-1	LAMP - LINE LIGHT	1
2	E-1260-1	SOCKET - LINE LIGHT	1
3	9127-1	SUPPORT - LINE LIGHT	1
4	35048-13	SPRING	1
5	9126-2	BRACKET - LINE LIGHT	1
6	SU-10-106	GREASE - DAMPENING	1
7	E-1214-47	CONNECTOR - FEM. FULLY INS. QUICK DISC.	1
8	H-6918-412	SCREW - 1/4-20 X 1-1/2 SOC HEAD CAP	1
9	H-6910-83203	SCREW - #8-32NC X 3/8" BUT HD CAP	2
10	H-7324-#8	WASHER - #8 INTERNAL TOOTH	2

13.37 Blower Assembly – Air Table Option

44186, Rev. B

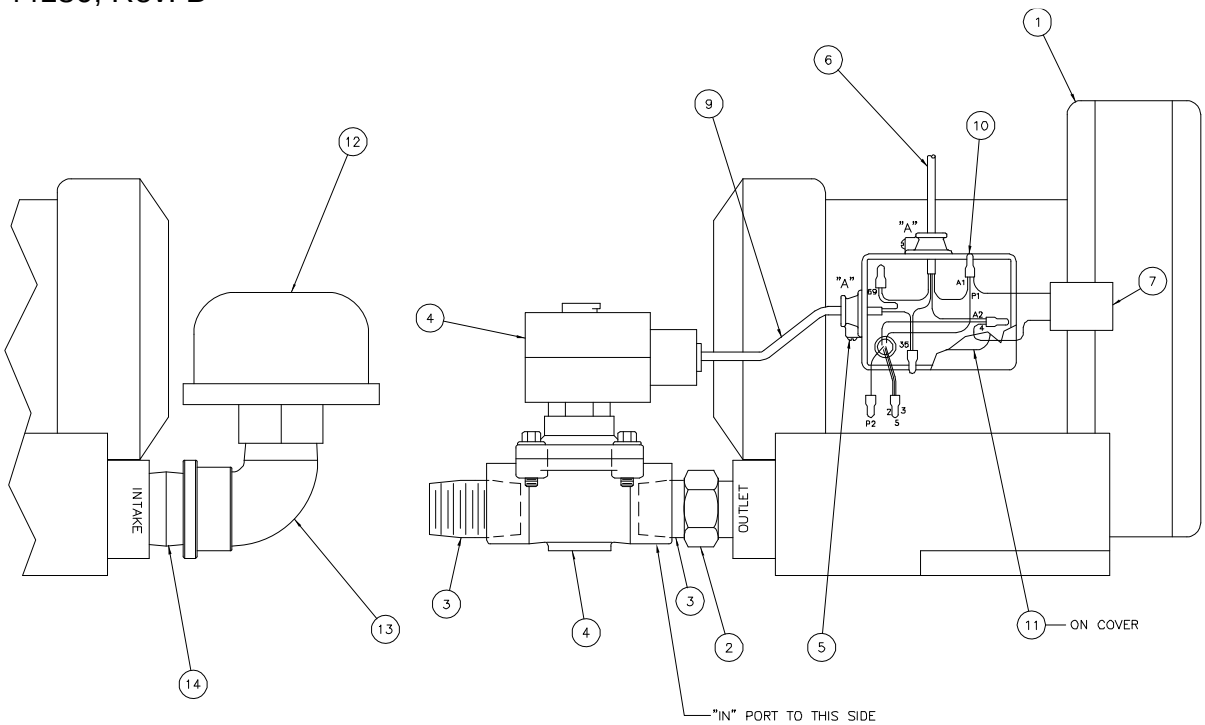

WIRING CHART		
HIGH VOLTAGE	WIRE NO.	CONNECT TO BLOWER NO.
230V 60Hz 240V 50Hz	A1	P1
	A2	4
	–	P2
	–	2,3 & 5

NO.	PART NO.	DESCRIPTION OF ACCESSORIES	QTY
1	E-1223-4	BLOWER - 1PH	1
2	P-204	REDUCER - PVC	1
3	H-6405-1212	NIPPLE - STEEL	1
4	P-202-1	VALVE - SOLENOID	1
5	S-1350-16	STRAIN RELIEF	2
6	E-748	CABLE - #18 GA. 4 COND. (LENGTH - SEE NOTE)	1
7	E-1736-2	QUENCHARC - 3" WIRE LEADS	1
8	E-1214-4	CONNECTOR - #8 INS. LOCKING FORK	1
9	E-1453-1	SHRINK TUBING - 6" LONG	1
10	E-1237-1	NUT - WIRE, SM YELLOW	6
11	S-1781-12	LABEL - EURO SHOCK W/TEXT	1
12	P-102	STRAINER	1
13	P-214	ELBOW - 90° STREET NPT, NYLON	1
14	P-212-1	PIPE NIPPLE - 1" x 1-1/2 PLASTIC	1
15	E-1214-65	CONNECTOR - 1/4" FULLY INS. QUICK DISC.	2

13.38 Power Panel Connection Procedure Label w/fuses

S-1781-170, Rev. E

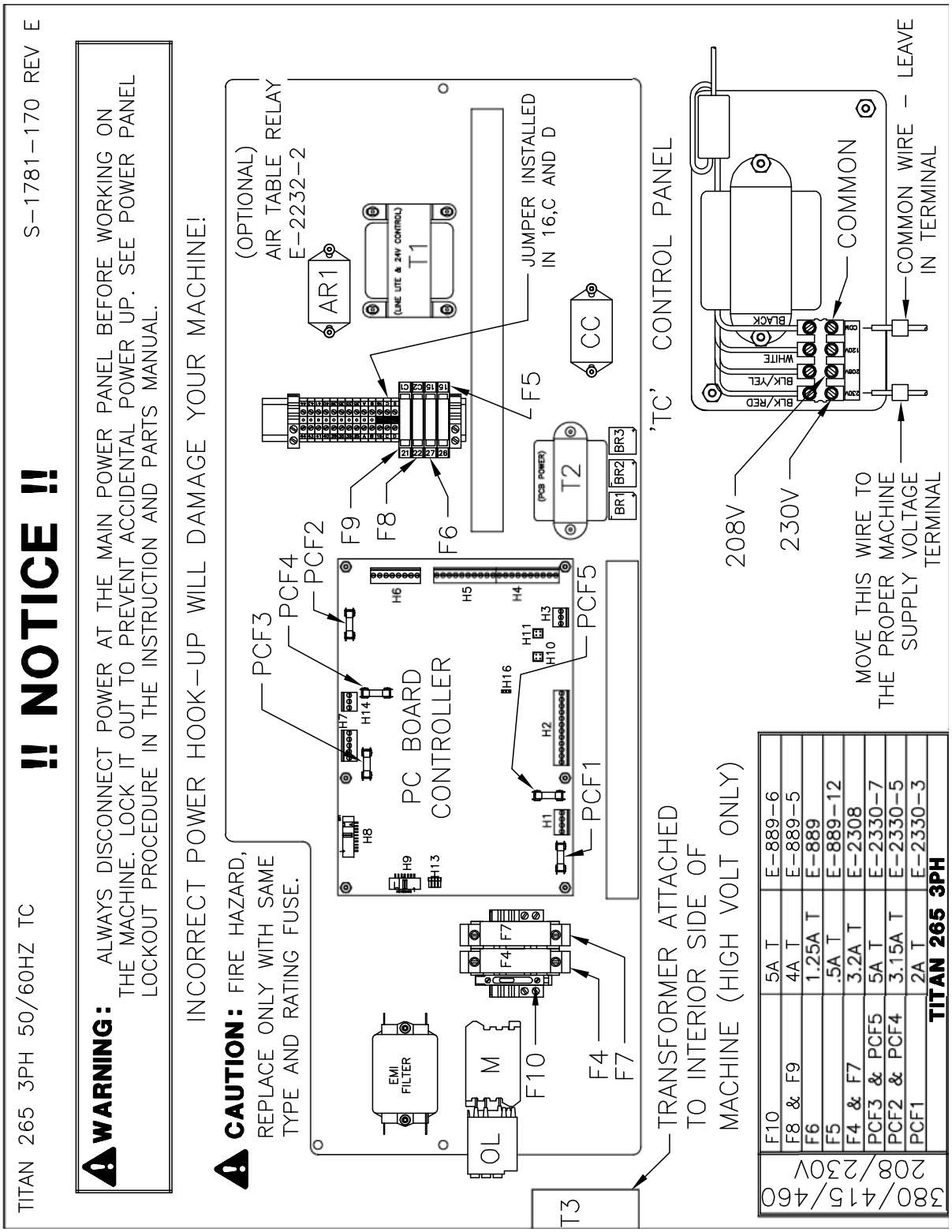

13.39 Power Panel Connection Procedure Label w/circuit breakers

S-1781-235, Rev. A

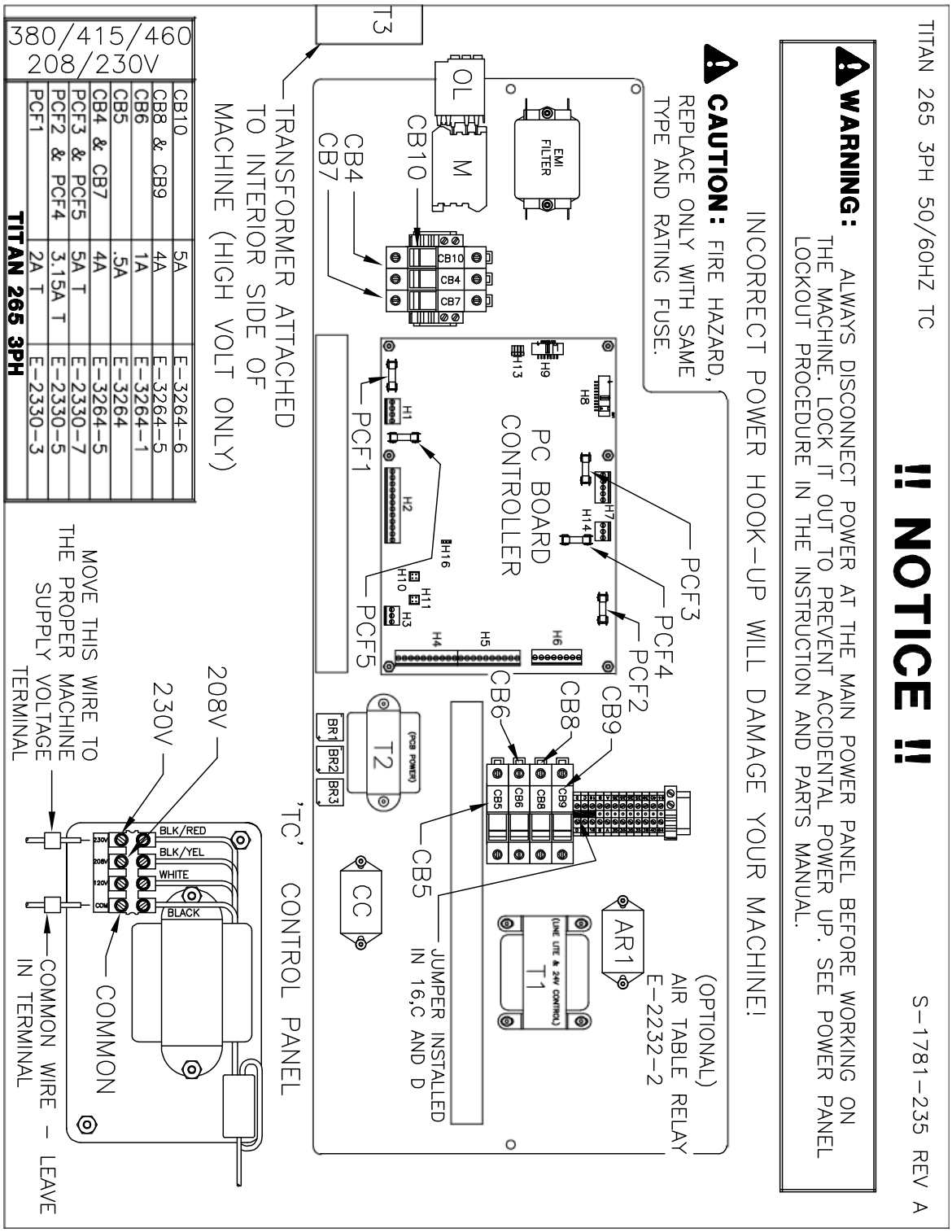

TC Power Panel PCB Troubleshooting

EE-3432-2

The following is a description of the various diagnostic LED's in the power panel. These lights are indicators used to show input and output status.

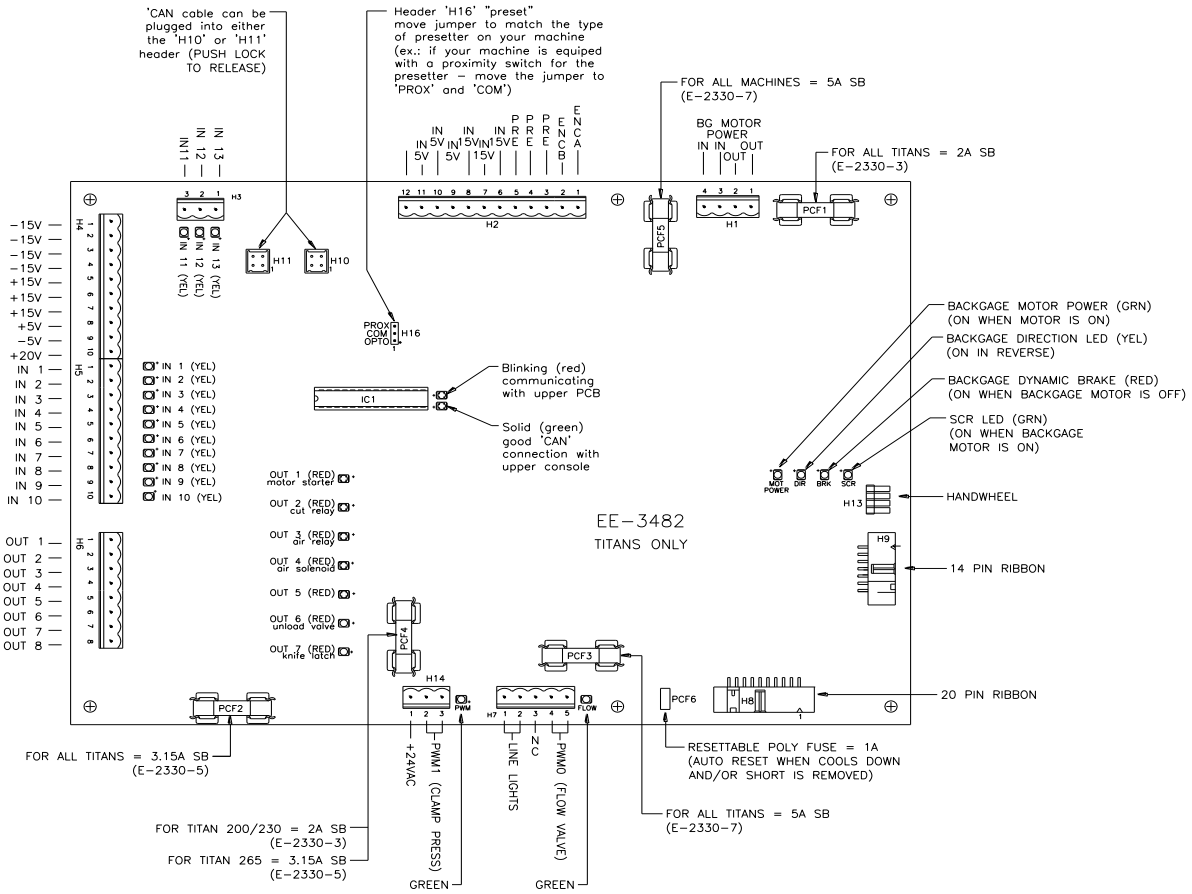

DESCRIPTION – INPUTS	
IN 1:	Left Cut Switch
IN 2:	Clamp Up Limit
IN 3:	Hyd. Cylinder Up Limit
IN 4:	Knife Up Limit
IN 5:	Right Cut Switch
IN 6:	Knife Latch
IN 7:	MSCE1 (motor starter)
IN 8:	False Clamp Switch
IN 9:	Knife Down Limit
IN 10:	Safety Eyes (PECU)
IN 11:	not used
IN 12:	not used
IN 13:	not used
IN 14:	not used
IN 15:	not used

DESCRIPTION – OUTPUTS	
OUT 1:	Pump Motor Starter
OUT 2:	Cut Solenoid 'A'
OUT 3:	Air Relay "AR"
OUT 4:	not used
OUT 5:	not used (Titan 230 & 200) Cut Sol. 'B' (Titan 265)
OUT 6:	Knife Latch
OUT 7:	Air Solenoid

DESCRIPTION – FUSES	
PCF1:	BACKGAGE MOTOR
PCF2:	OUTPUTS
PCF3:	LINE LIGHTS
PCF4:	PWM2 (FLOW VALVE)
PCF5:	BACKGAGE MOTOR
PCF6:	SEC. PWM0 PROTECTION

14.0 Safety Systems Test

Machine manufacturer CHALLENGE Model TITAN 265

Serial Number _____

Frequency of test: **THESE TESTS SHOULD BE PERFORMED AT THE BEGINNING OF EACH WORK DAY.**

Turn the power on and preset the backgauge. Make sure the knife and clamp are in the “up” position (if they are not, follow the prompts on the screen at power–up to send them up).

Test #1: Wave a test object 12mm in diameter between the electric eye beams. The indicator lights should indicate the eyes are blocked. If they do not, do not use the machine. Repair or adjustment is needed.

Test #2: While making a cut, lean into the electric eye beams. The knife and clamp should immediately return to the up position. If they do not, do not use the machine. Repair or adjustment is needed.

Please enter date and initials for both tests.

Date _____ _____ _____ _____ _____ _____ _____ _____ _____ _____ _____

Test 1 _____ _____ _____ _____ _____ _____ _____ _____ _____ _____ _____

Test 2 _____ _____ _____ _____ _____ _____ _____ _____ _____ _____ _____

Date _____ _____ _____ _____ _____ _____ _____ _____ _____ _____ _____

Test 1 _____ _____ _____ _____ _____ _____ _____ _____ _____ _____ _____

Test 2 _____ _____ _____ _____ _____ _____ _____ _____ _____ _____ _____

Date _____ _____ _____ _____ _____ _____ _____ _____ _____ _____ _____

Test 1 _____ _____ _____ _____ _____ _____ _____ _____ _____ _____ _____

Test 2 _____ _____ _____ _____ _____ _____ _____ _____ _____ _____ _____

Date _____ _____ _____ _____ _____ _____ _____ _____ _____ _____ _____

Test 1 _____ _____ _____ _____ _____ _____ _____ _____ _____ _____ _____

Test 2 _____ _____ _____ _____ _____ _____ _____ _____ _____ _____ _____

Date _____ _____ _____ _____ _____ _____ _____ _____ _____ _____ _____

Test 1 _____ _____ _____ _____ _____ _____ _____ _____ _____ _____ _____

Test 2 _____ _____ _____ _____ _____ _____ _____ _____ _____ _____ _____

Repairs	Initials of Repairer	Date

CHALLENGE